PDP-11/05
engineering drawings

digital equipment corporation · maynard, massachusetts

digital EQUIPMENT CORPORATION MAYNARD MASSACHUSETTS

DRAWING DIRECTORY

CUSTOMER PRINT SET INDEX

SEQUENCE	
16 BIT COMPUTER (11/05)	B-DD-11/Ø5-Ø
16 BIT COMPUTER (11/05)	D-UA-11/Ø5-Ø-Ø
16 BIT COMPUTER (11/05)	C-PL-11/Ø5-Ø-Ø
MODULE UTILIZATION (16K)	D-MU-11/Ø5-Ø-Ø2
MODULE UTILIZATION (8K)	D-MU-11/Ø5-Ø-Ø1
MODULE UTILIZATION (10½)	D-MU-11/Ø5-Ø-Ø7
CENTRAL PROCESSOR	B-DD-KD11-B
16 BIT 18MIL MEMORY	B-DD-MM11-L
BUS TERMINATOR	D-CS-M93Ø-Ø-1
CONSOLE ASSY	B-DD-KY11-J
H75Ø POWER SUPPLY	B-DD-H75Ø-Ø
LINE SET BCØ5-H	B-DD-BC05H-Ø
LINE SET BCØ5-T	B-DD-BC05T-Ø
LINE SET BCØ5-U	B-DD-BC05U-Ø
INPUT HARNESS (A.C.)	E-IA-7008713-0-0
HARNESS (D.C.)	D-IA-7008856-0-0
BA11-D POWER TO DISTRIBUTION BOARD	E-IA-7009208-0-0
HEADER CABLE ASSY	D-IA-7008820-0-0
CIRCUIT SCHEMATIC	C-CS-5409949-0-1
BERG TO BACKPLANE	C-CS-M9970-0-1
CABLE ASSY (KL8E)	D-IA-7008360-0-0
MAINTENANCE BOARD	D-BS-KM11-Ø-MB
MAINT. MODULE OVERLAY (11/05-KM1)	A-SS-5509081-0-9
MAIN. MODULE OVERLAY (11/05-KM2)	A-SS-5509081-0-10
CIRCUIT SCHEMATIC (8K)	C-CS-5409818-0-1
*ETCH/WIRE LIST (8K)	K-WL-7008843-1-1
CIRCUIT SCHEMATIC (16K)	C-CS-5410035-0-1
*ETCH/WIRE LIST (16K)	K-WL-7008843-2-1
CIRCUIT SCHEMATIC (10½)	D-CS-5410329-0-1
*ETCH/WIRE LIST (10½)	K-WL-11Ø5-Ø-8
1105 ACCESSORY LIST	A-AL-11Ø5-Ø-Ø4
1105 SOFTWARE LIST	A-SL-11Ø5-Ø-Ø5
* 1105 ACCEPTANCE PROC.	A-SP-11Ø5-Ø-6
*DECAL (10.5"box)	A-DC-7411305-0-0
*PACKAGING INSTRUCTIONS	A-PI-3700061-0-0

SEQUENCE

THIS IS PRINT SET

UNIT VARIATIONS

VAR	TITLE	PRINT SET 11Ø5-Ø
	CONFIGURATION #1	
11Ø5-HA	KD11-B, MM11-K, 115V/60HZ	x
11Ø5-HB	KD11-B, MM11-K, 230V/50HZ	X
11Ø5-JA	KD11-B, MM11-L, 115V/60HZ	X
11Ø5-JB	KD11-B, MM11-L, 230V/50HZ	X
	CONFIGURATION #2	
11Ø5-KA	KD11-B, MM11-K, 115V/60HZ	X
11Ø5-KB	KD11-B, MM11-K, 230V/50HZ	X
11Ø5-LA	KD11-B, MM11-L, 115V/60HZ	X
11Ø5-LB	KD11-B, MM11-L, 230V/50HZ	X
	CONFIGURATION #3	
11Ø5-MA	KD11-B, MM11-K, 115V/60HZ	X
11Ø5-MB	KD11-B, MM11-K, 230V/50HZ	X
11Ø5-PA	KD11-B, MM11-L, 115V/60HZ	X
11Ø5-PB	KD11-B, MM11-L, 230V/50HZ	X
	CONFIGURATION #4	
11Ø5-NC	KD11-B, MM11-L 115V/60HZ	X
11Ø5-ND	KD11-B, MM11-L, 230V/50HZ	X

* ONLY INCLUDED IN MANUFACTURING PRINT SET.

REVISIONS			
REV	CHG. NO.	REVISED & REDRAWN	DATE
P	11/05-47		8-73
R	11/05-48		9-73
S	11/05-49		10-73
T	11/05-50		11-73
U	11/05-51		11-73
V	11/05-52		12-73
W	11/05-53		1-74
Y	11/05-54		2-74
Z	11/05-55		3-74
AA	11/05-56		3-74
AB	11/05-57		4-74

USED ON OPTION/MODEL

SHEET 1 OF 7

DRN. J.CAHILL	DATE 4/19/2	TITLE 16 BIT COMPUTER (PDP 11Ø5)
CHK'D. C.TESCHNER	DATE 4/19/2	
PROJ ENG. B.WEEKS	DATE 5/25/2	
PROD. R.PETERSON	DATE 5/25/2	SIZE B · CODE DD · NUMBER 11Ø5-Ø · REV AB
FIELD SERV. D.DICKHUT	DATE 5/25/2	DIST

DEC 1-0-1321-1062-1A-8972

DRB 106

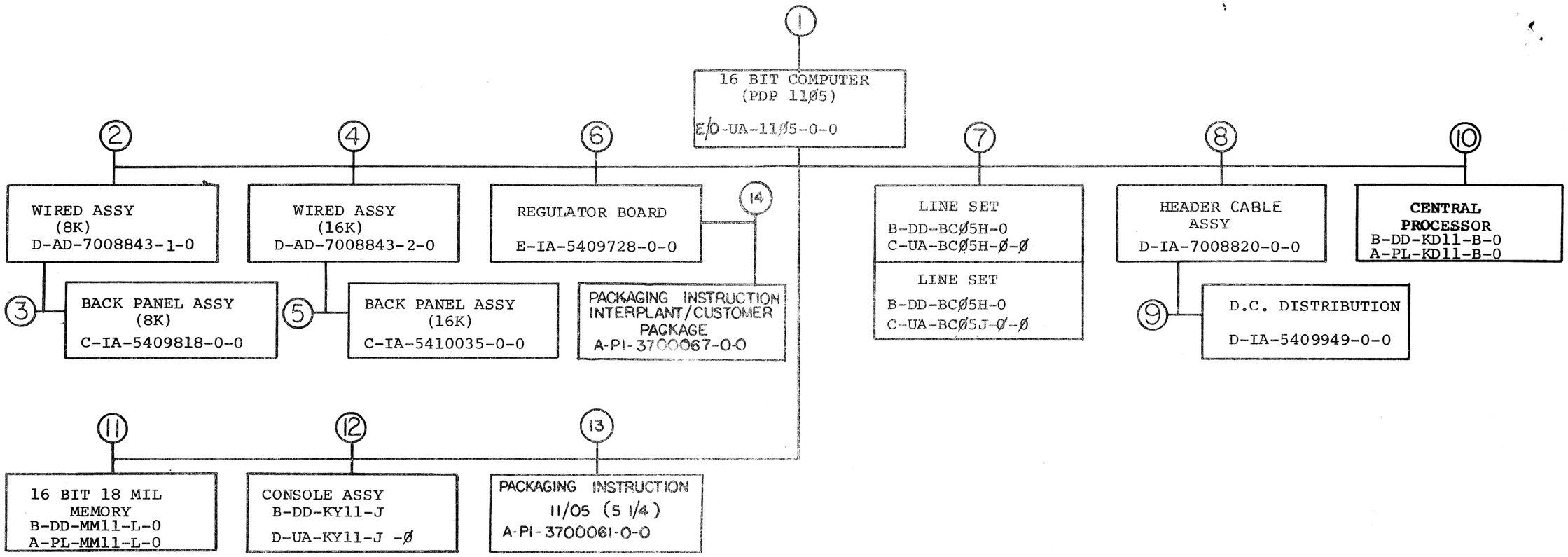

NOTE: This sheet for 5¼" only. See sheets 6 & 7 for 10½" chassis

TITLE		SIZE	CODE	NUMBER	REV
16 BIT COMPUTER (PDP 11Ø5)	SHEET 2 OF 7	B	DD	11Ø5-Ø	A-B

DRB 107
DEC 16—(325)—1062—3—N871

CUSTOMER PRINT SET 11Ø5-Ø	MFG. SET	FIND NO.	DRAWING NO.	REV	NO OF SHT	DESCRIPTION	OPTION NO./FILE DATE
			ELECTRICAL				
X	X	1	E-IA-7008713-Ø-Ø	#	1	AC INPUT HARNESS	
X	X		E-IA-7008856-Ø-Ø	#	1	HARNESS (D.C.)	
X	X		A-AL-11Ø5-Ø-Ø4	A	1	11Ø5 ACCESSORY LIST	
X	X		A-SL-11Ø5-Ø-Ø5	*	1	11Ø5 SOFTWARE LIST	
X	X		D-MU-11Ø5-Ø-Ø1	*	1	MODULE UTILIZATION (8K)	
X	X		D-MU-11Ø5-Ø-Ø2	*	1	MODULE UTILIZATION (16K)	
	X		A-SP-11Ø5-Ø-6		23	11Ø5 ACCEPTANCE PROCEDURE	
X	X		D-IA-7008360-0-0	#	1	CABLE ASSY (KL8E)	
X	X		D-BS-KM11-Ø-MB	#	3	MAINTENANCE BOARD	
X	X		A-SS-5509081-0-9	#	1	MAINT. MODULE OVERLAY (11/Ø5-KM1)	
X	X		A-SS-5509081-0-10	#	1	MAINT. MODULE OVERLAY (11/Ø5-KM2)	
X	X		D-CS-M930-0-1		1	BUS TERMINATOR	
		2	D-AD-7008843-1-0	#	1	WIRED ASSY (8K)	
	X		K-WL-7008843-1-1	#	1	ETCH/WIRE LIST (8K)	
		3	C-IA-5409818-0-0	#	1	BACK PANEL ASSY (8K)	
X	X		C-CS-5409818-0-1	#	2	CIRCUIT SCHEMATIC (8K)	
		4	D-AD-7008843-2-Ø	#	1	WIRED ASSY (16K)	
	X		K-WL-7008843-2-1	#	1	ETCH/WIRE LIST (16K)	
		5	C-IA-5410035-0-0	#	1	BACK PANEL ASSY (16K)	
X	X		C-CS-5410035-0-1	#	2	CIRCUIT SCHEMATIC (16K)	
		6	E-IA-5409728-Ø-Ø	#	1	REGULATOR BOARD	
			D-CS-5409728-0-1	#	1	CIRCUIT SCHEMATIC	
			B-MH-5409728-0-6	#	1	MODULE E.C.O. HISTORY	

CUSTOMER PRINT SET 11Ø5-Ø	MFG SET	FIND NO.	DRAWING NO.	REV	NO OF SHT	DESCRIPTION	OPTION NO./FILE DATE
			ELECTRICAL				
C	C	7	B-DD-BCØ5H-0	#	3	LINE SET	
			C-UA-BCØ5H-0-0	#	1	LINE SET BCØ5H (115V)	
			C-UA-BCØ5J-0-0	#	1	LINE SET BCØ5J (230V)	
X	X	8	D-IA-7008820-0-0	#	1	HEADER CABLE ASSY	
		9	D-IA-5409949-0-0	#	1	D.C. DISTRIBUTION	
X	X		C-CS-5409949-0-1	#	1	CIRCUIT SCHEMATIC	
			B-MH-5409949-0-6	#	1	MODULE E.C.O. HISTORY	
C	C	10	B-DD-KD11-B	#	1	CENTRAL PROCESSOR	
			A-PL-KD11-B-0-0	#	1	CENTRAL PROCESSOR (PL)	
C	C	11	B-DD-MM11-L	#	3	16 BIT 18 MIL MEMORY	
			A-PL-MM11-L-0-0	#	1	16 BIT 18 MIL MEMORY (PL)	
		12	B-DD-KY11-J		3	DRAWING DIRECTORY (KY11-J)	
			D-UA-KY11-J-Ø		1	CONSOLE ASSY (PDP 11Ø5)	
			A-PL-KY11-J-Ø		1	CONSOLE ASSY (PDP 11Ø5) PL.	

CUSTOMER PRINT SET CODES
X = PRINT OF DOCUMENT INCLUDED IN PRINT SET
C = INCLUDES ALL PRINTS INDICATED ON DOCUMENT
S = CONFIDENTIAL AUTHORIZED SIGNATURE REQUIRED

TITLE		SIZE	CODE	NUMBER	REV
16 BIT COMPUTER (PDP 11Ø5)	SHEET 3 OF 7	B	DD	11Ø5-Ø	AB

DRB 108
DEC 16-(325)-1062-2B-R972

MECHANICAL

CUSTOMER PRINT SET 11Ø5-Ø	MFG. SET	FIND NO.	DRAWING NO.	REV	NO OF SHT	DESCRIPTION	OPTION NO./FILE DATE
X	X	1	E/D-UA-11Ø5-Ø-Ø	U	6	16 BIT (PDP 11Ø5) ASSY	
X	X		C-PL-11Ø5-Ø-Ø	U	3	16 BIT (PDP 11Ø5) ASSY (P.L.)	
			E-IA-7409458-0-0	#	4	CHASSIS	
			D-IA-7409453-0-0	#	1	FAN MOUNTING PLATE	
			A-DC-5309413-0-0	#	1	SPECIAL DECAL (UL)	
			C-IA-7411235-0-0	#	1	FILLER STRIP ASSY	
			B-IA-7411167-0-0	#	1	RET CONN BLOCK REAR	
			B-IA-7411168-0-0	#	1	RET CONN BLICK FRONT	
			D-IA-7409459-0-0	#	1	BRKT CHASSIS SLIDE (L.H.)	
			D-IA-7409533-0-0	#	1	COVER SIDE	
			C-IA-7409460-0-0	#	1	COVER TOP	
			C-IA-7409449-0-0	#	1	BRKT CHASSIS SLIDE (R.H.)	
			C-MD-7409591-0-0	#	1	CLAMP	
			C-PS-1210698-0-0	#	1	GUIDE CARD CENTER	
			D-PS-1210951-0-0	#	1	BLOCK CABLE RETAINER	
			D-MD-7409432-0-0	#	1	PLATE LOWER RETAINER	
			C-MD-7409430-0-0	#	1	NUT SWIVEL	
			C-MD-7409479-0-0	#	1	PLATE PRESSURE	
			D-IA-7008856-0-0	#	1	HARNESS DC	
			E-IA-7008713-0-0	#	1	AC INPUT HARNESS	
			A-AL-11Ø5-Ø-Ø4	#	1	11Ø5 ACCESSORY LIST	
			A-SL-11Ø5-Ø-Ø5	#	1	11Ø5 SOFTWARE LIST	
			B-MD-7409817-0-0	#	1	PLATE CABLE CLAMP	
			B-MD-7409816-0-0	#	1	SHIPPING BRACKET	
			C-MD-7409818-0-0	#	1	BRACKET CABLE CLAMP	
			B-IA-7409729-0-0	#	1	JUMPER POWER	
			D-PS-1210945-0-0	#	4	SLIDES	
			B-IA-7409903-0-0	#	1	JUMPER POWER	
			D-IA-7409533-1-0	#	1	COVER SIDE	
			E-IA-5309816-0-0	#	1	CHASSIS POWER SUPPLY	
			D-IA-7008726-0-0	#	1	TRANSFORMER ASSY	
			A-DC-5309414-0-0	#	1	SPECIAL DECAL (UL)	
			D-PS-1211381-0-0	#	1	AIR BAFFLE	
		2	D-AD-7008843-1-0	#	1	WIRED ASSY (8K)	

MECHANICAL

CUSTOMER PRINT SET 11Ø5-Ø	MFG SET	FIND NO.	DRAWING NO.	REV	NO OF SHT	DESCRIPTION	OPTION NO./FILE DATE
		3	C-IA-5409818-0-0	#	1	BACK PANEL ASSY (8K)	
			D-AH-5409818-0-5	#	1	ASSY/DRILLING HOLE	
			K-CO-5409818-0-4	#	1	X-Y CO-ORDINATE HOLE LOCATION	
			E-PS-1210258-0-0	#	1	288 PIN CONN (H863)	
			C-PS-1210932-0-0	#	1	CONNECTOR GUIDE	
			E-PS-1211439-0-0	#	1	11Ø5 LOGIC FRAME	
			E-PS-1211425-0-0	#	1	72 PIN CONN BLOCK	
		4	D-AD-7008843-2-0	#	1	WIRED ASSY (16K)	
			D-MD-5010051-0-0	#	1	SHEET PROTECTION	
		5	C-IA-5410035-0-0	#	1	BACK PANEL ASSY (16K)	
			E-PS-1210258-0-0	#	1	288 PIN CONN (H863)	
			D-AH-5410035-0-5	#	1	ASSY/DRILLING HOLE	
			K-CO-5410035-0-4	#	1	X-Y CO-ORDINATE HOLE LOCATION	
			C-PS-1210932-0-0	#	1	CONNECTOR GUIDE	
			E-PS-1211439-0-0	#	1	11Ø5 LOGIC FRAME	
			E-PS-1211425-0-0	#	1	72 PIN CONN BLOCK	
		6	E-IA-5409728-0-0	#	1	REGULATOR BOARD	
			K-CO-5409728-0-4	#	1	X-Y CO-ORDINATE HOLE LAYOUT	
			C-MD-5309779-0-0	#	1	CONTACT COMMON CAPACITOR	
			C-MD-5309781-0-0	#	1	CONTACT CAPACITOR	
			C-IA-5310126-0-0	#	1	HOLDER CAPACITOR	
			D-PS-1210596-0-0	#	1	HEAT SINK	
		7	B-DD-BCØ5H-0	#	3	LINE SET	
			C-UA-BCØ5H-Ø-Ø	#	1	LINE SET BCØ5H (115)	
			C-UA-BCØ5J-Ø-Ø	#	1	LINE SET BCØ5J (230)	

CUSTOMER PRINT SET CODES	
	X = PRINT OF DOCUMENT INCLUDED IN PRINT SET
	C = INCLUDES ALL PRINTS INDICATED ON DOCUMENT
	S = CONFIDENTIAL AUTHORIZED SIGNATURE REQUIRED

TITLE	SHEET	SIZE	CODE	NUMBER	REV
16 BIT COMPUTER (PDP 11Ø5)	4 OF 7	B	DD	11Ø5-Ø	AB

DRB 108

DEC 16-(325)-1062-2B-R972

CUSTOMER PRINT SET 11Ø5-Ø	MFG. SET	FIND NO.	DRAWING NO.	REV	NO OF SHT	DESCRIPTION	OPTION NO./FILE DATE
			MECHANICAL				
		8	D-IA-7008820-0-0	#	1	HEADER CABLE ASSY	
		9	D-IA-5409949-0-0	#	1	D.C. DISTRIBUTION	
			K-CO-5409949-0-4	#	1	X-Y CO-ORDINATE HOLE LOCATION	
			D-AH-5409949-0-5	#	1	ASSY/DRILLING HOLE LAYOUT	
		10	B-DD-KD11-B	#	1	CENTRAL PROCESSOR	
			A-PL-KD11-B-0-0	#	1	CENTRAL PROCESSOR (PL)	
		11	B-DD-MM11-L	#	3	16 BIT 18 MIL MEMORY	
			A-PL-MM11-L-0-0	#	1	16 BIT 18 MIL MEMORY (PL)	
C	C	12	B-DD-KY11-J		3	DRAWING DIRECTORY (KY11-J)	
			D-UA-KY11-J-Ø		1	CONSOLE ASSY (PDP 11Ø5)	
			A-PL-KY11-J-Ø		1	CONSOLE ASSY (PDP 11Ø5) P.L.	
	X	13	A-PI-3700061-0-0	#	2	11/05 PACKAGING INSTRUCTION 5¼	
			A-PS-9905185-0-0		9	SHIPPING CARTON SET UP	
			A-PS-9905184-0-0		2	BEZEL PROTECTOR	
			A-PS-9905129-0-7		4	POLYETHYLENE BAG	

CUSTOMER PRINT SET 11Ø5-Ø	MFG SET	FIND NO.	DRAWING NO.	REV	NO OF SHT	DESCRIPTION	OPTION NO./FILE DATE
			MECHANICAL				
	X	14	A-PI-3700065-0-0	#	2	REGULATOR BOARD PKG. INST.	
			A-PS-9905201-0-0		1	REGULAR SLOTTED CARTON	
			A-PS-9905202-0-0		1	TAPED TUBE	
			A-PS-9905203-0-0		2	RAT TRAP	
			A-PS-9905374-0-0		3	TAPE TUBE	
			A-PS-9905375-0-0		3	DIECUT CARTON	

CUSTOMER PRINT SET CODES
X = PRINT OF DOCUMENT INCLUDED IN PRINT SET
C = INCLUDES ALL PRINTS INDICATED ON DOCUMENT
S = CONFIDENTIAL AUTHORIZED SIGNATURE REQUIRED

TITLE	SHEET	SIZE	CODE	NUMBER	REV
16 BIT COMPUTER	5 OF 7	B	DD	11Ø5-Ø	A-B

DRB 108

DEC 16-(325)-1062-2B-R972

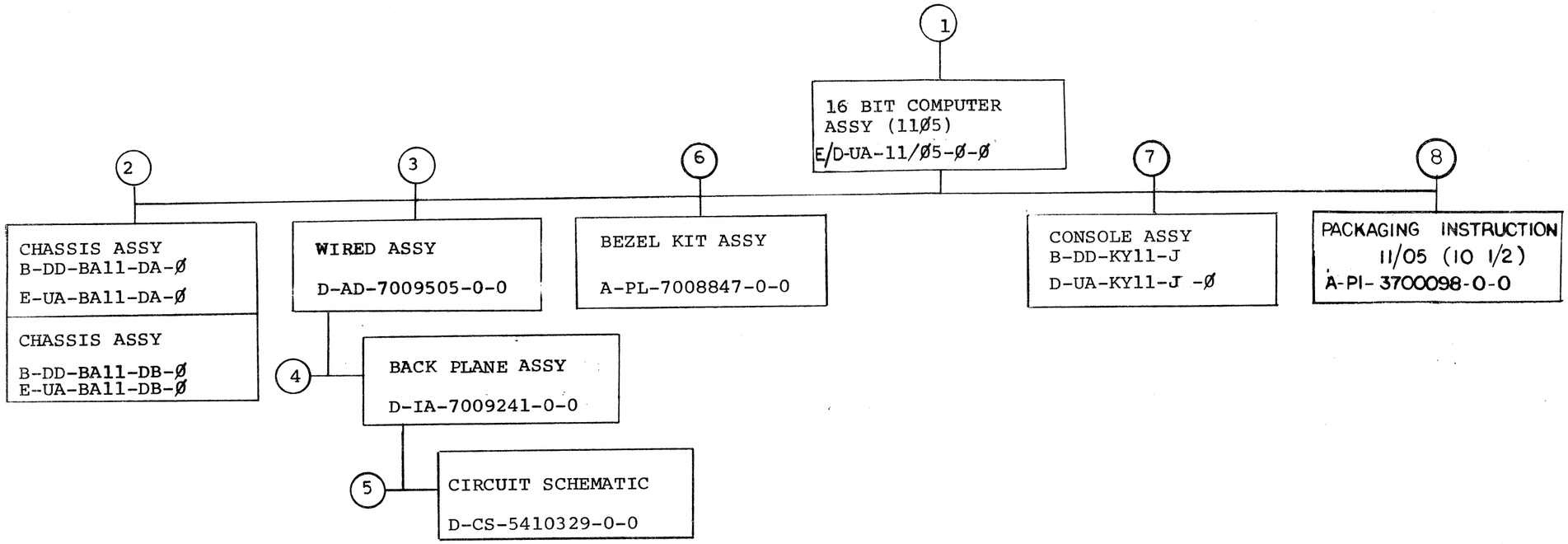

NOTE: SHEETS 6 & 7 ARE FOR 10.5 BOX ONLY.

TITLE		SIZE	CODE	NUMBER	REV
16 BIT COMPUTER (PDP11Ø5)	SHEET 6 OF 7	B	DD	11Ø5-Ø	AB

DRB 107
DEC 16-(325)-1062-3-N871

ELECTRICAL

CUSTOMER PRINT SET 11Ø5-Ø	MFG. SET	FIND NO.	DRAWING NO.	REV	NO OF SHT	DESCRIPTION	OPTION NO./FILE DATE
		1	E/D-UA-11/Ø5-Ø-Ø	U	6	16 BIT COMPUTER ASSY (11Ø5)	
X	X		D-IA-7009360-0-0		1	CPU POWER HARNESS	
X	X		D-MU-11Ø5-Ø-Ø7		1	MODULE UTILIZATION (10.5)	
X	X		C-CS-M9970-0-1	#	1	BERG TO BACK PLANE	
		2	B-DD-BA11-D		2	DRAWING DIRECTORY (BA11-D)	
			E-UA-BA11-D-Ø		2	CHASSIS ASSY	
		3	D-AD-7009505-0-0		1	WIRED ASSY	
			C-PS-1210698-0-0		1	CARD GUIDE	
	X		K-WL-1105-0-8	B	1	ETCH/WIRE LIST (10½)	
		4	D-IA-7009241-0-0		1	BACK PLANE ASSY	
			5010328		1	ETCH CIRCUIT BOARD	
			E-PS-1211425-0-0		1	72 PIN CONN BLOCK	
			E-PS-1211439-0-0		1	11/05 LOGIC FRAME	
			E-PS-1210258-0-0		1	288 PIN CONN BLOCK	
X	X	5	D-CS-5410329-0-1	#	1	CIRCUIT SCHEMATIC (1105 10.5)	
			K-CO-5410329-0-4		1	X-Y COORDINATE HOLE LOCATION	
			E-AH-5410329-0-5		1	ASSY/DRILLING HOLE LAYOUT	
			B-MH-5410329-0-6		1	MODULE ECO HISTORY	
			5010328		1	ETCH CIRCUIT BOARD	

MECHANICAL

CUSTOMER PRINT SET 11Ø5-Ø	MFG SET	FIND NO.	DRAWING NO.	REV	NO OF SHT	DESCRIPTION	OPTION NO./FILE DATE
		1	E/D-UA-11/Ø5-Ø-Ø	U	6	16 BIT COMPUTER ASSY (11Ø5)	
			D-IA-7009360-0-0		1	CPU POWER HARNESS	
			D-MD-7410664-0-0		1	CONSOLE MTG BRKT (10.5)	
			B-IA-7409729-0-0		1	JUMPER POWER	
C	C		B-DD-H75Ø-Ø	#		H75Ø POWER SUPPLY	
C	C		B-DD-BC05T-0	#		LINE SET BC05-T	
C	C		B-DD-BC05U-0	#		LINE SET BC05-U	
X	X		E-IA-7009208-0-0	#	1	DISTRIBUTION BOARD HARNESS (BA11-D)	
	X		A-DC-7411305-0-0	#		DECAL (10.5" MODULE UTILIZATION)	
			A-DC-7409478-0-0		1	DECAL, PATENT	
		2	B-DD-BA11-D		2	DRAWING DIRECTORY (BA11-D)	
			E-UA-BA11-D-Ø		2	CHASSIS ASSY	
		4	D-IA-7009241-0-0		1	BACK PLANE ASSY	
			5010328		1	ETCH CIRCUIT BOARD	
		5	D-CS-5410329-Ø-1		1	CIRCUIT SCHEMATIC (11Ø5 10.5)	
		6	A-PL-7008847-0-0		1	BEZEL KIT ASSY	
			D-IA-7409683-0-0		1	BEZEL	
			A-PS-1211221-0-0		1	STRIP MTG	
		7	B-DD-KY11-J		3	DRAWING DIRECTORY (KY11-J)	
			D-UA-KY11-J-Ø		1	CONSOLE ASSY (PDP11Ø5)	
			A-PL-KY11-J-Ø		1	CONSOLE ASSY (PDP11Ø5) PL	
	X	8	A-PI-3700098-0-0	#	2	11/05 PACKAGING INSTRUCTION (10½)	
			A-PS-9905278-0-0		8	SHIPPING CARTON SET UP	
			A-PS-9905332-0-0		2	SIDE PROTECTOR	
			A-PS-9905333-0-0		2	REAR PROTECTOR	
			A-PS-9905335-0-0		2	BEZEL PROTECTOR	
			A-PS-9905129-0-7		4	POLYETHYLENE BAG	

CUSTOMER PRINT SET CODES
X = PRINT OF DOCUMENT INCLUDED IN PRINT SET
C = INCLUDES ALL PRINTS INDICATED ON DOCUMENT
S = CONFIDENTIAL AUTHORIZED SIGNATURE REQUIRED

TITLE		SIZE	CODE	NUMBER	REV.
16 BIT COMPUTER (PDP11Ø5)	SHEET 7 OF 7	B	DD	11Ø5-Ø	AB

DRB 108

DEC 16-(325)-1062-2B-R972

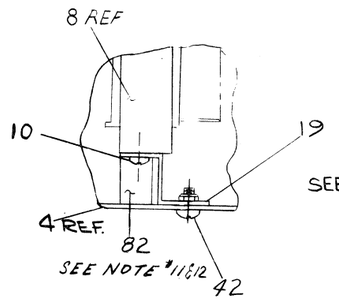

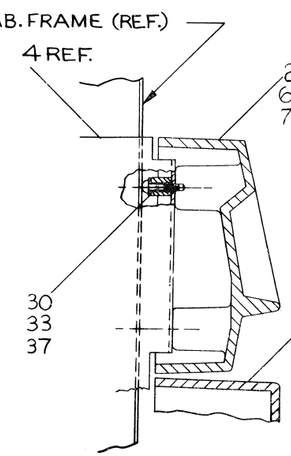

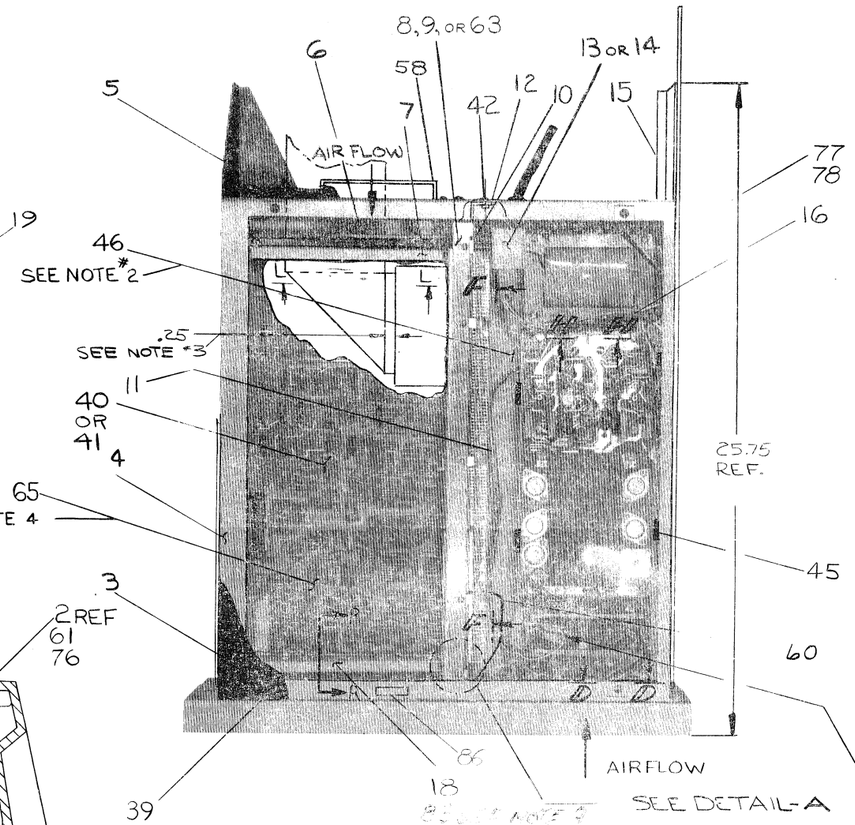

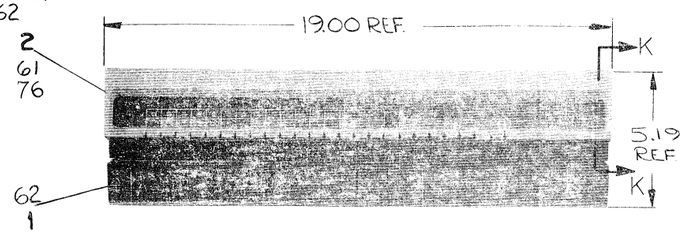

WIRE TABLE

PART NO.	COLOR	FROM HARNESS LEAD NO.	TO SYSTEM LOCATION	REMARKS
7008713	RED	J1	S1-2	VIEW E-E
	RED	J2	S1-1	
	VIO	J3	S1-6	
	BLK	J4	S1-5	
	RED	J12	H740 P.S. J3	THERMAL INTERLOCK
	RED	J11	H740 FAN	P.S. FAN TAB
	WHT	J10	H740 FAN	P.S. FAN TAB
		J6	P9	BACK OF CHASSIS
		J5	P8	BACK OF CHASSIS
		J9	TRANSFORMER P5	VIEW H-H
		P1	A.C. INPUT BOX J13	A.C. INPUT BOX
	RED	J7	11/05 FAN	CHASSIS FAN
7008713	WHT	J8	11/05 FAN	CHASSIS FAN
7008856		P1	H740 P.S. J2	P.S. MATE-N-LOCK
	VIO	8	BP-1	VIEW E-F
	RED	9	BP-3	
	YEL	10	BP-2	
	BLK	11	BP-4	
	BLU	12	BP-5	
	ORN	13	LOGIC POINT C&L/L	+15
	BRN	14	LOGIC POINT C&L/L P1	C+C 20
	BLK	15	BP-6	
7008856	RED	16	BP-7	VIEW E-F
		TRANSFORMER P2	H740 P/S J1	VIEW H-H & POWER CARD TO TRANSFORMER
7409729-2	RED	B.P.-7	CONSOLE-+8	CONSOLE TO BACK PLANE & VIEW D-D
7409729-1	BLK	B.P.-6	CONSOLE-GND	CONSOLE TO BACK PLANE & VIEW D-D
7409903	BLK	B.P.-6	BACK PLANE-GND	BACK PLANE TO CHASSIS-DETAIL-A

THIS CONNECTION IS SHOWN 90° OUT OF POSITION FOR CLARITY.

NOTES:

1. INSTALLATION OF I/Ø CABLE, WHICH IS ALREADY CONNECTED TO ITEM #(2), CONSOLE ASSY, IS AS FOLLOWS. RUN I/Ø CABLE DOWN INNER SIDE OF ITEM #(18) CARD GUIDE ASSY SLIDE CABLE THROUGH OPENING ON BOTTOM OF ITEM #(18) CARD GUIDE ASSY, TO ONE OF THE THREE EXIT LOCATIONS FOR THE CABLE, AFTER EXIT LOCATION IS DECIDED, FOLD CABLE 90° AND HOLD IN PLACE BY USING ITEM # 35 (CLAMP) AND ITEM #46 (TAPE) AS SHOWN IN VIEW C-C.
2. USE TAPE (ITEM #46) TO HOLD HEADER CABLE ASSY TO CHASSIS.
3. FOLD CABLE 90° AS SHOWN TO INSURE CORRECT LOCATION IN CABLE CLAMP.
4. ITEM #65 (ELECTROMAGNETIC SHIELD) GOES BETWEEN CENTRAL PROCESSOR BOARDS & MEMORY BOARDS.
5. THE 6 PIN MATE-N-LOCK CONN (MALE) ON TRANSFORMER (ITEM #67) IS TO REMAIN ON FLOOR OF CHASSIS.
6. CONNECT 3 PIN-MATE-N LOCK CONN. (FEMALE) ON TRANSFORMER (ITEM #67) TO 3 PIN MATE-N-LOCK CONN. (MALE) ON REGULATOR BOARD (ITEM # 75) (SECTION P-P). THIS CABLE SHOULD BE ROUTED BETWEEN THE TWO LARGE CAPACITORS AND THE CAPACITOR HOLDER (5310126).
7. 2 PIN MATE-N-LOCK TO BE SECURED TO HEAT SINK FOR HANDLING.
8. ITEMS # 79 & 80 (THREAD CUTTING SCREWS) MUST BE ASSEMBLED USING A TORQUE SCREW DRIVER. SCREWS WILL BE ATTACHED USING 8 INCH POUNDS OF TORQUE.
9. ADHERE FOAM (9009542) TO TOP OF CARD GUIDE (#1211099).
10. ~~ADHERE FOAM (9009541) TO INSIDE OF COVER (7409460).~~
11. ADHERE FOAM (9009543) TO END OF LOGIC FRAME.
12. DO NOT ADD ITEM #82 TO VARIATIONS MA, MB, PA, PB.
13. INSTALL BAFFLE (1211381) IN UNUSED SLOTS ON RIGHT HAND CARD GUIDE (1211099).

REV.	CHANGE NO.	CHK	REVISIONS
A	11/05-00017	PM	Initial release 6-1-72 — LYONS
B	11/05-00030	PM	7-12-72 — M. TITELBAUM
C	11/05-00034	PM	9-29-72 — Beasley
D	11/05-00035	PM	10-5-72 — M. TITELBAUM
E	11/05-00039	PM	11-20-72 — Beasley — GRAHAM
F	11/05-00040	PM	12-4-72 — Beasley — G. GRAHAM
G	11/05-00041	PM	11-27-72 — 12-5-72 — G. GRAHAM
H	11/05-00044	PM	1-8-73 — Beasley — R.L. GATES
J	11/05-00047	PM	1-10-73 — M. TITELBAUM
K	11/05-00048	PM	1-19-73 — M. TITELBAUM
L	11/05-00050	PM	2-8-73 — G. GRAHAM
M	11/05-00051	PM	6-8-73 — G. GRAHAM
N	11/05-00052	PM	11-17-73 — G. GRAHAM
P	11/05-00062	PM	11-30-73 — G. GRAHAM
R	11/05-00063	PM	1-2-74 — G. GRAHAM
T	11/05-00055	BB	3-26-74 — B. MINOR
U	11/05-00056	BB	3-27-74 — B. ARMSTRONG

ADDED SHEETS 5 & 6 — T. RANDALL

FIRST USED ON OPTION/MODEL	QTY.	DESCRIPTION	PART NO. / ITEM NO.
PDP 11Ø5		PARTS LIST	

UNLESS OTHERWISE SPECIFIED DIMENSION IN INCHES. TOLERANCES: DECIMALS .XXX = .005, .XX = .02, .X = .1; ANGLES ±0° 30'. REMOVE BURRS AND BREAK SHARP CORNERS. SURFACE QUALITY ✓

MATERIAL —

FINISH —

DRN. G. Graham 2-24-72 — CHK'D. G. Teschner 4-14-72 — ENG. Alan Lyons 5-15-72 — PROD. ENG. R. Weeks 5-16-72 — PROD. R.K. Peterson 5-16-72

NEXT HIGHER ASSY. B-DD-11Ø5-Ø

SCALE NONE — SHEET 1 OF 6

digital EQUIPMENT CORPORATION MAYNARD MASSACHUSETTS

TITLE: 16 BIT COMPUTER ASSY (PDP 11Ø5)

SIZE D — CODE UA — NUMBER 11Ø5-Ø-Ø — REV. U — DIST.

DEC FORM NO. DRD 100-A

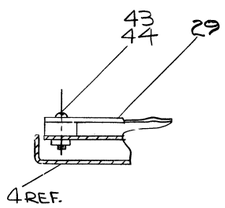

SECTION J-J

REAR VIEW

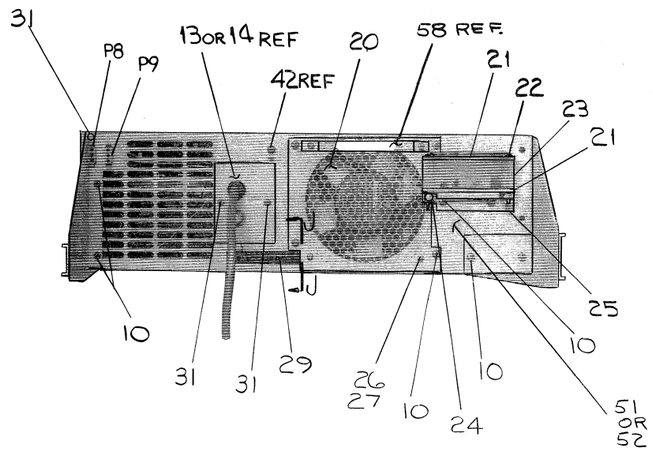

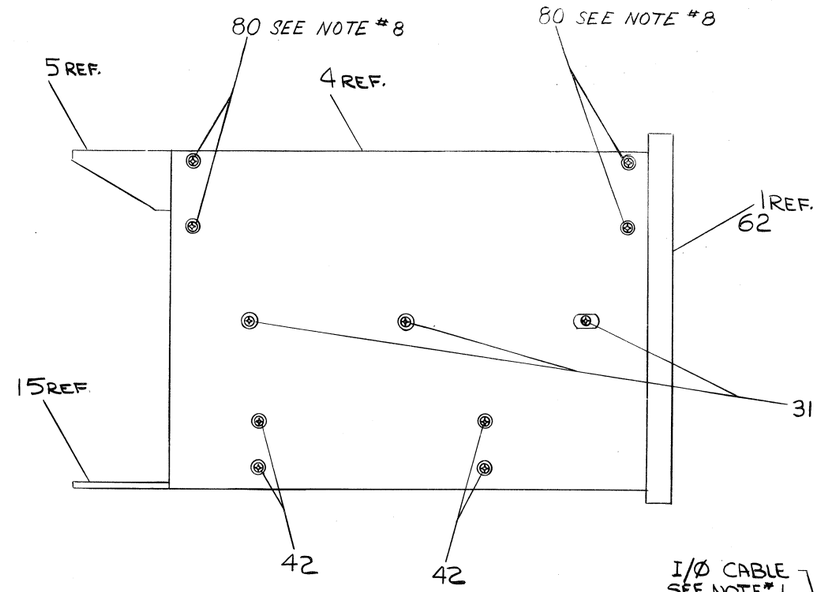

VIEW B-B

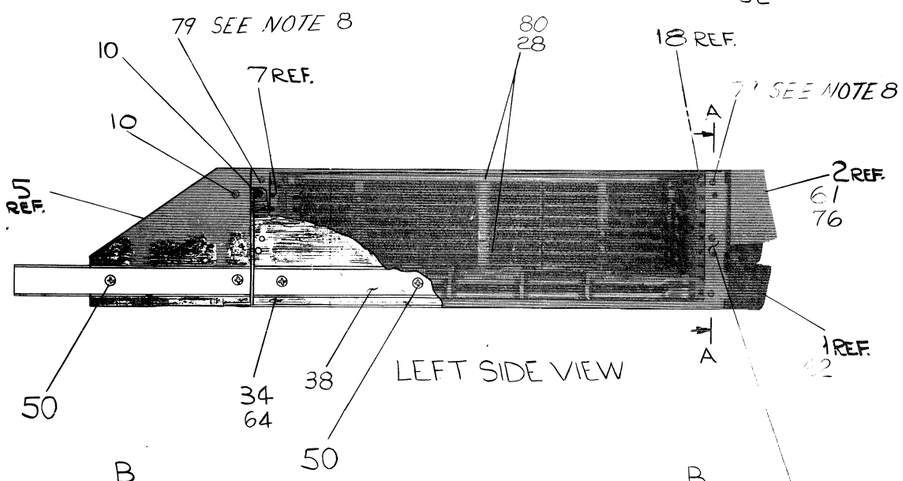

LEFT SIDE VIEW

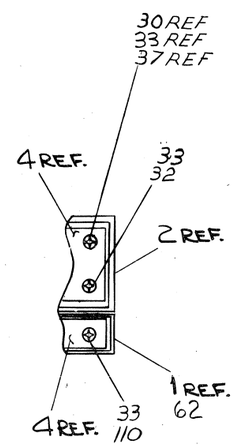

VIEW A-A

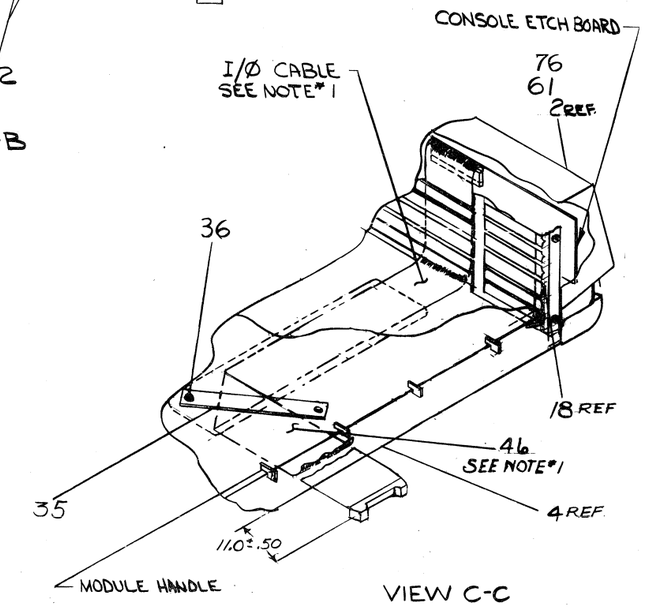

VIEW C-C

B B

SEE VIEW C-C

FIRST USED ON OPTION/MODEL	QTY.	DESCRIPTION	PART NO.	ITEM NO.
PDP 11Ø5		PARTS LIST		

UNLESS OTHERWISE SPECIFIED DIMENSION IN INCHES. TOLERANCES

DECIMALS	ANGLES
.XXX = .005 .XX = .02 .X = .1	±0° 30'

REMOVE BURRS AND BREAK SHARP CORNERS SURFACE QUALITY ✓

MATERIAL —/—

FINISH —/—

		DATE
DRN.	[illegible]	8-24-72
CHKD.	C. Teschner	9-14-72
ENG.	Alan Lyons	5-15-72
PROJ. ENG.	G. W. Wicks	5-16-72
PROD.	R. K. Peterson	5/16/72

NEXT HIGHER ASSY. B-DD-11Ø5-Ø

SCALE NONE

SHEET 2 OF 6

digital EQUIPMENT CORPORATION MAYNARD MASSACHUSETTS

TITLE 16 BIT COMPUTER ASSY (PDP11Ø5)

SIZE	CODE	NUMBER	REV.
D	UA	11Ø5-Ø-Ø	U

DIST. G

REVISIONS

REV.	CHANGE NO.	CHK

DEC FORM NO. DRD 100-A

SIZE	CODE	NUMBER	REV.
D	UA	11Ø5-Ø-Ø	U

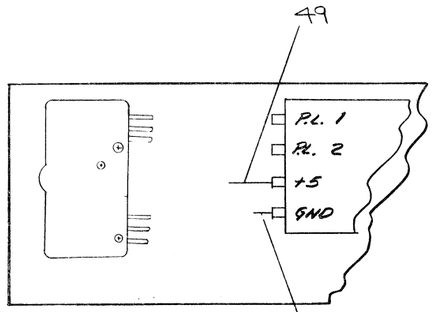

VIEW D-D
SCALE-NONE

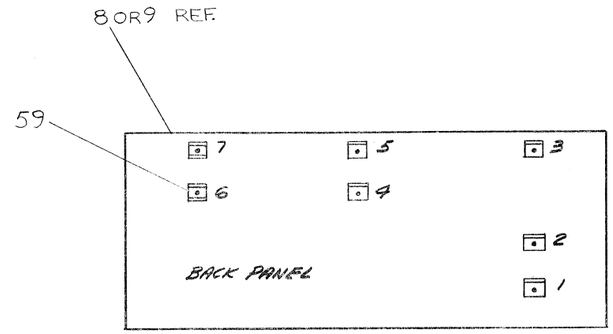

VIEW F-F
SCALE: NONE

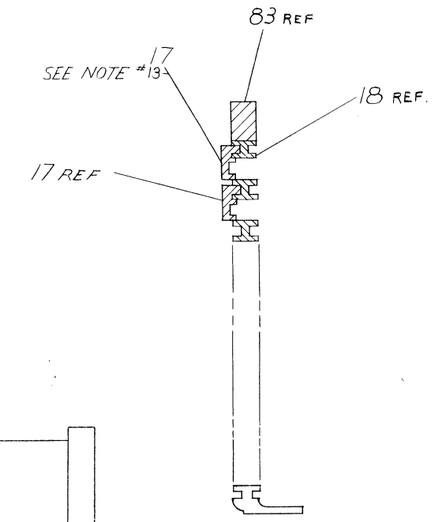

SECTION R-R

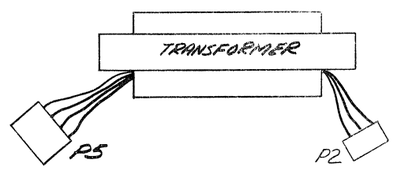

VIEW H-H
SCALE: NONE

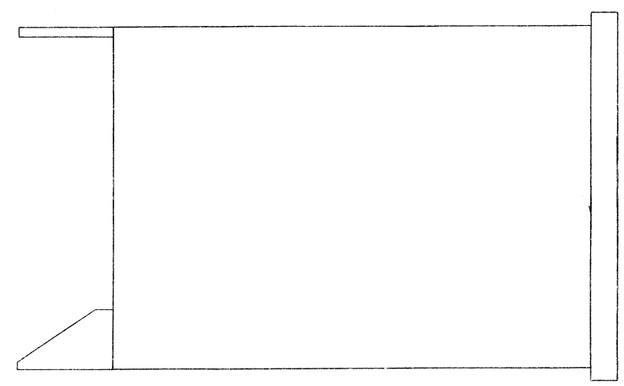

TOP VIEW
(WITH TOP COVER)

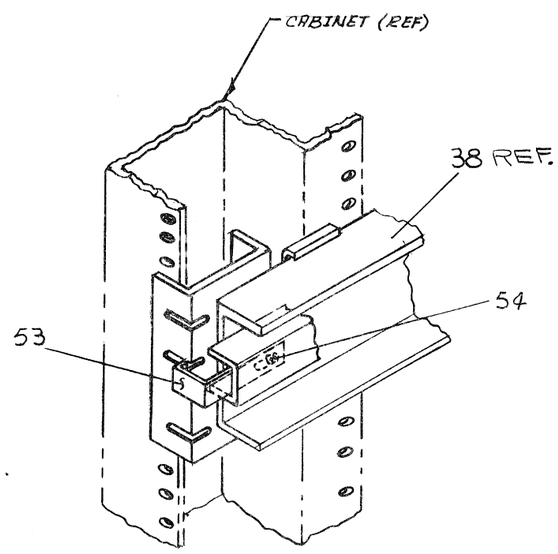

LOCATION OF SHIPPING BRACKETS WHEN UNIT IS SUPPLIED IN CAB. (BOTH SIDES)

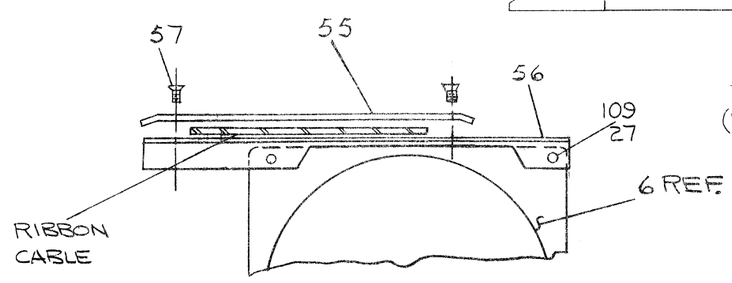

VIEW L-L
SCALE: NONE

FIRST USED ON OPTION/MODEL	QTY.	DESCRIPTION	PART NO.	ITEM NO.
PDP 11Ø5		PARTS LIST		

UNLESS OTHERWISE SPECIFIED DIMENSION IN INCHES. TOLERANCES

DECIMALS	ANGLES
.XXX = .005 .XX = .02 .X = .1	±0° 30'

REMOVE BURRS AND BREAK SHARP CORNERS SURFACE QUALITY ✓

MATERIAL —

FINISH —

DRN.		DATE 3-28-72
CHK'D. C. Teschner		DATE 4-14-72
ENG. Alan Lyons		DATE 5-15-72
PROJ. ENG.		DATE 5-16-72
PROD.		DATE

NEXT HIGHER ASSY. B-DD-11Ø5-Ø

SCALE NONE

SHEET 3 OF 6

digital EQUIPMENT CORPORATION MAYNARD MASSACHUSETTS

TITLE
16 BIT COMPUTER
ASSY (PDP 11Ø5)

SIZE	CODE	NUMBER	REV.
D	UA	11Ø5-Ø-Ø	U

DIST.

REVISIONS	CHANGE NO.	REV.
CHK		

DEC FORM NO. DRD 100-A

SIZE D CODE UA NUMBER 11Ø5-Ø-Ø REV. U

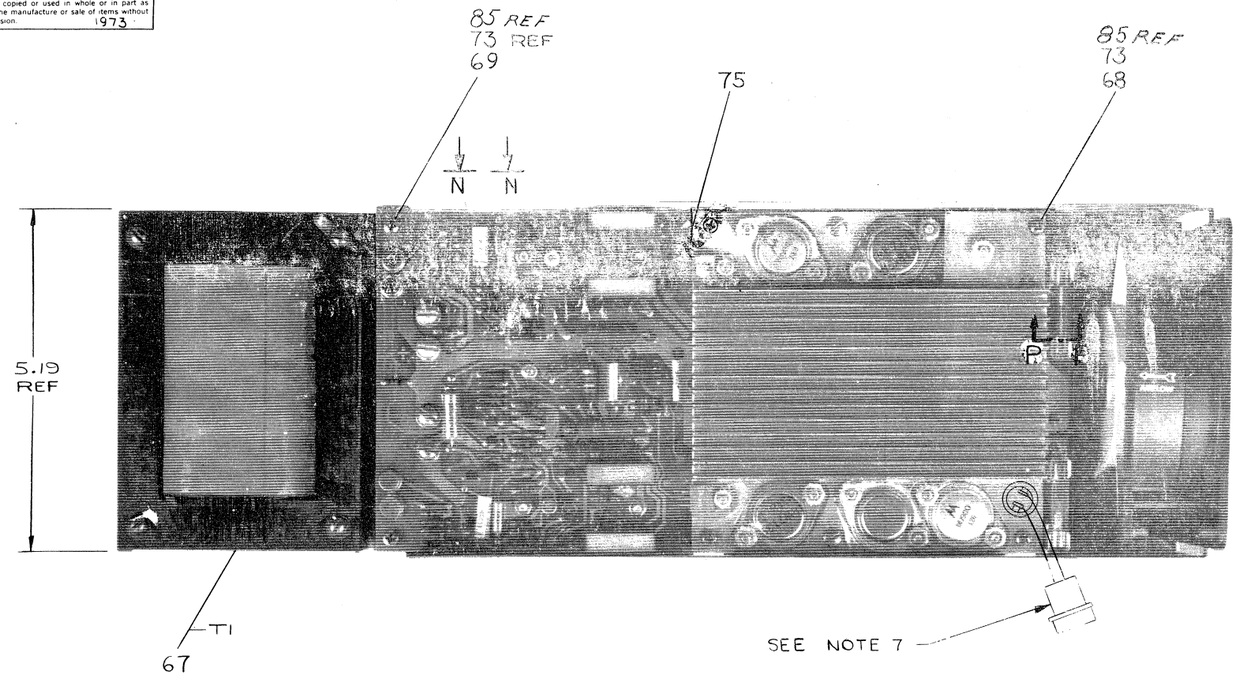

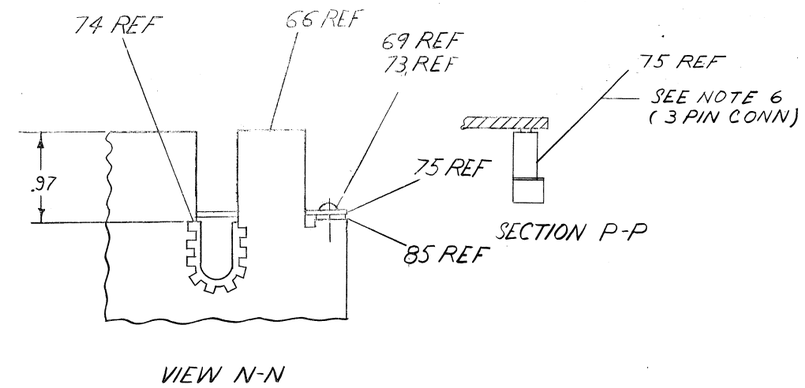

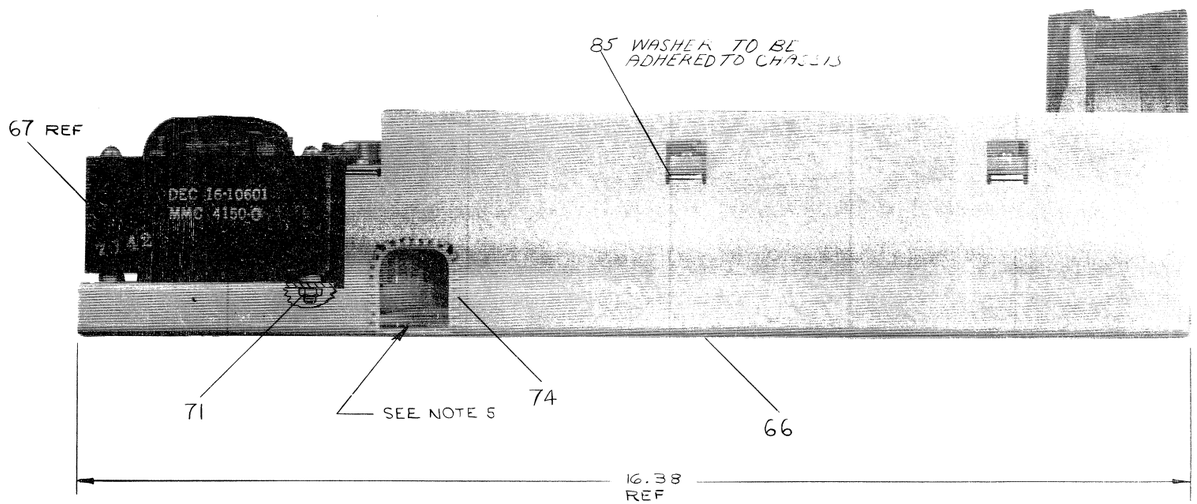

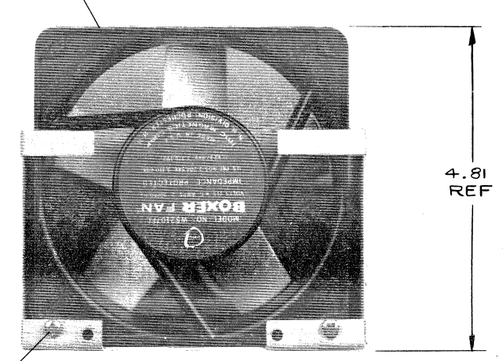

FIRST USED ON OPTION/MODEL	QTY.	DESCRIPTION	PART NO.	ITEM NO.
1/2		PARTS LIST		

UNLESS OTHERWISE SPECIFIED
DIMENSION IN INCHES
TOLERANCES

DECIMALS	ANGLES
XXX .005 XX .02 X .1	±0 30'

REMOVE BURRS AND BREAK SHARP CORNERS SURFACE QUALITY ✓

MATERIAL: SEE PART LIST

FINISH: —

DRN J. CAHILL	DATE 2.24.72	digital EQUIPMENT CORPORATION MAYNARD MASSACHUSETTS
CHK. C. TESCHNER	DATE 4-14-72	TITLE 16 BIT COMPUTER ASSY (PDP 1105)
ENG A. LYONS	DATE 5-15-72	
PROJ. ENG B. WEEKS	DATE 5-16-72	
PROD R. PETERSON	DATE 5-16-72	
NEXT HIGHER ASSY. B-DD-1105-0		SIZE D CODE UA NUMBER 1105-0-0 REV. U
SCALE —		
SHEET 4 OF 6		DIST.

REVISIONS: REV | CHANGE NO | CHK

DEC FORM NO DRD 100-A

WIRE TABLE

WIRE I.D.	WIRE SIZE AWG	WIRE COLOR	FROM POINT	FROM CONN	TO POINT	TO CONN.	SIGNAL NAME
85	—	—	—	P1	—	J1	
	22	ORN	9	—	—		-C
	18	BLK	7	—	—	TB1-1	GND
	18	RED	8	—	—	TB1-2	+5V
	14	BLK	4	—	—	TB1-3	GND
	22	GRY	5	—	—	TB1-4	+15V
	18	BLU	6	—	—	TB1-5	-15V
	18	VIO	3	—	—	TB1-6	SCLO
	18	YEL	2	—	—	TB1-7	SCLO
85	18	RED	1	—	—	TB1-8	+5V

LEGEND

NUMBER	VARIATION
115/60 - NC	115V 60 HZ
1/95 - NO	230V 50 HZ

NOTES:

1A. POWER WIRING TO KY11-J CONSOLE (ITEM#3) IS AS FOLLOWS:
POINT NO'S. 32,33 (BLU/BLK TWP) OF POWER TO DISTRIBUTION BOARD HARNESS ARE TO BE CONNECTED TO KY11-J CONSOLE, AS SHOWN IN VIEW E-E.

ITEM#92 (BLK WIRE) #93 (RED WIRE) TO BE CONNECTED AS SHOWN IN DETAIL-B
ITEM#93 (RED WIRE) GOING TO +5V AND ITEM#92 (BLK WIRE) GOING TO GND, THEN CONNECT LOOSE END OF ITEMS #92 & 93 TO KY11-J AS SHOWN IN VIEW D-D

2A. INSTALLATION OF I/O CABLE, WHICH IS ALREADY CONNECTED TO CONSOLE ITEM NO 79, TO BE DRESSED TO FRONT PORTION OF CHASSIS AND ALONG POWER SUPPLY, THEN INTO CHASSIS WHERE CABLE IS CONNECTED TO M7260 BY USING 45° BENDS AND FASTENING WITH TIE WRAP HARDWARE. SEE DETAIL-C

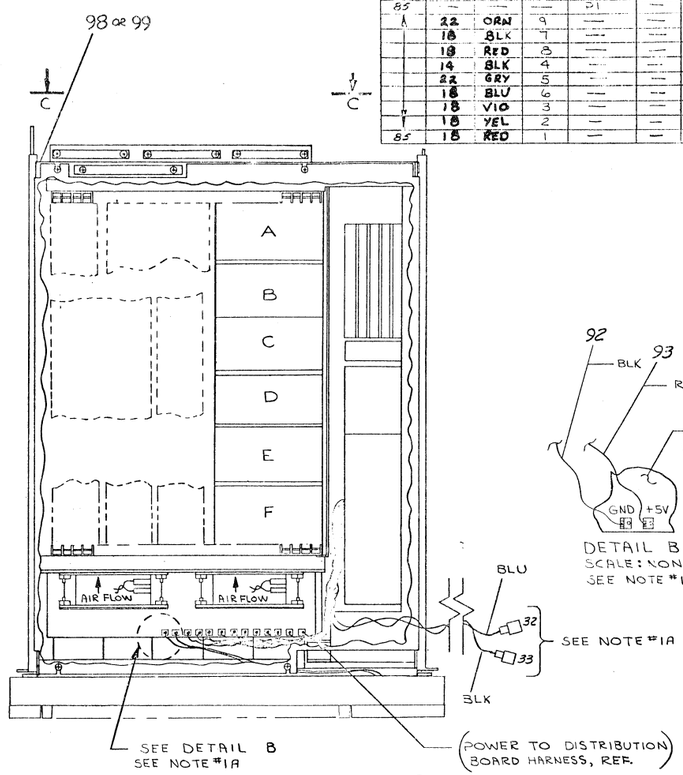

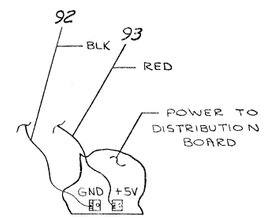

DETAIL B
SCALE: NONE
SEE NOTE #1A

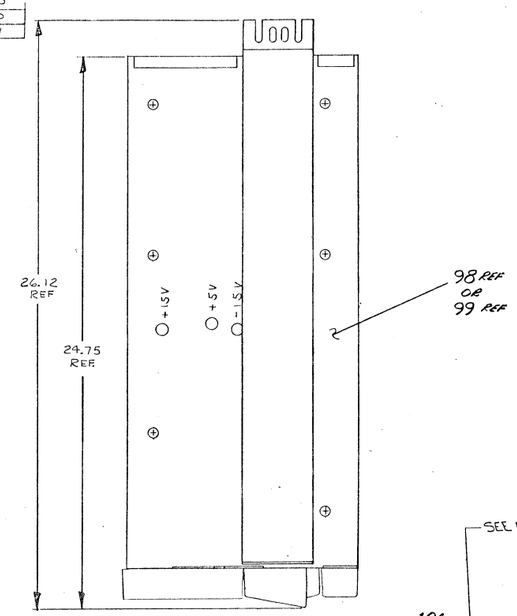

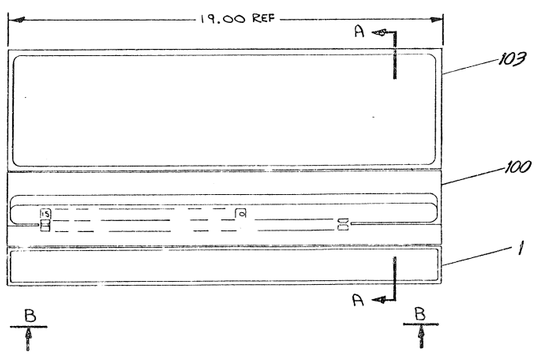

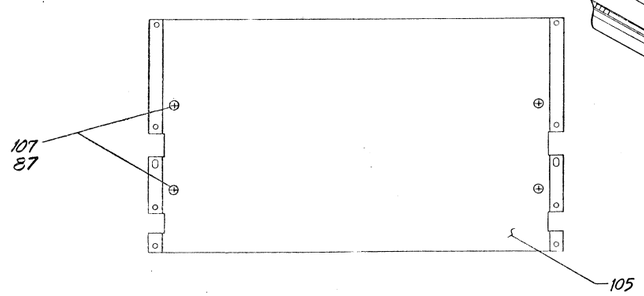

VIEW A-A
ITEM #100, 1 & 107 REMOVED FOR CLARITY OF VIEW

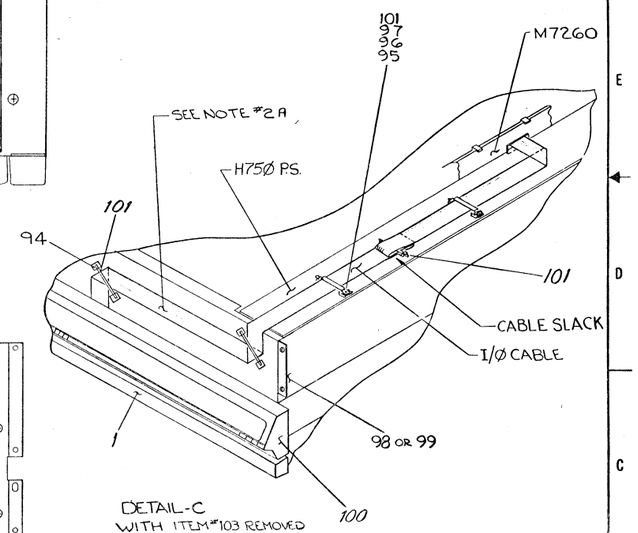

DETAIL-C
WITH ITEM#103 REMOVED

FIRST USED ON OPTION NUMBER	QTY.	DESCRIPTION	PART NO.	ITEM NO.
11/05		PARTS LIST		

UNLESS OTHERWISE SPECIFIED DIMENSION IN INCHES TOLERANCES
DECIMALS .XXX ± .005 .XX ± .02 .X ± .1
ANGLES ± 0° 30'
REMOVE BURRS AND BREAK SHARP EDGES. SURFACE QUALITY ✓
MATERIAL
FINISH

DRN J. SHELL DATE 2-23-72
DSGN J. TOCHNER DATE 3-14-72
ENG A. LYNS DATE
PROJ ENG. J. WEEKS DATE
QA J. ERICKSON DATE
NEXT HIGHER ASSY. CD-11/05-0-0
SCALE NONE
SHEET 5 OF 6

DIGITAL EQUIPMENT CORPORATION
MAYNARD, MASSACHUSETTS

TITLE 16 BIT COMPUTER (PDP 1105)

CODE E | NUMBER UA 11/05-0-0 | REV U

CHANGE NO. | REVISIONS | BY | CHK

SEC FORM N... DHE 100

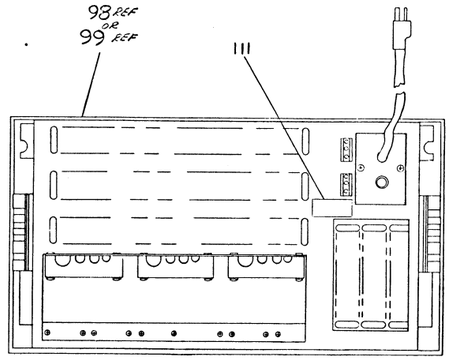

VIEW C-C

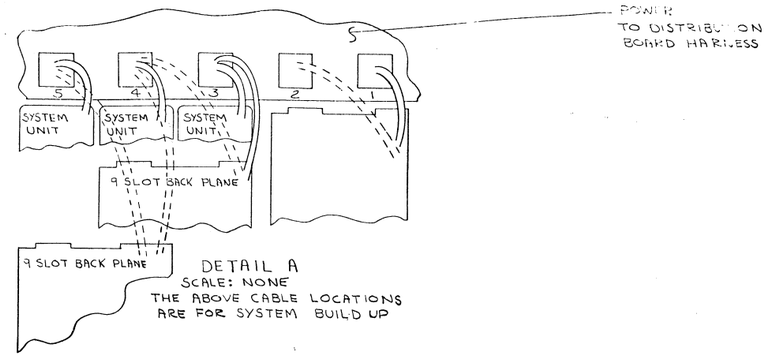

DETAIL A
SCALE: NONE
THE ABOVE CABLE LOCATIONS
ARE FOR SYSTEM BUILD UP

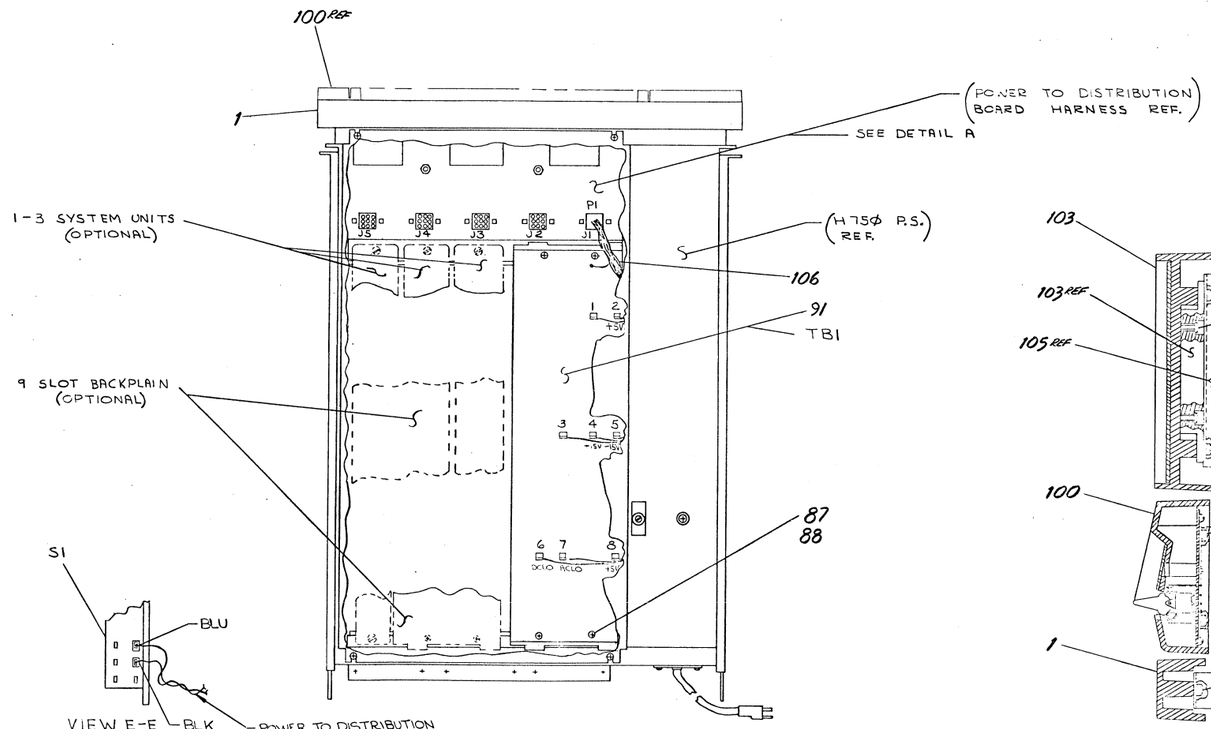

VIEW B-B

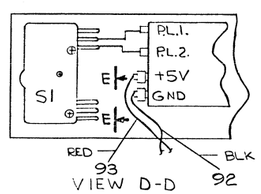

VIEW D-D
SCALE: NONE
SEE NOTE #1A

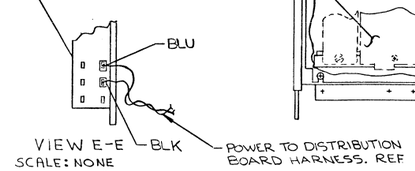

VIEW E-E
SCALE: NONE
SEE NOTE #1A

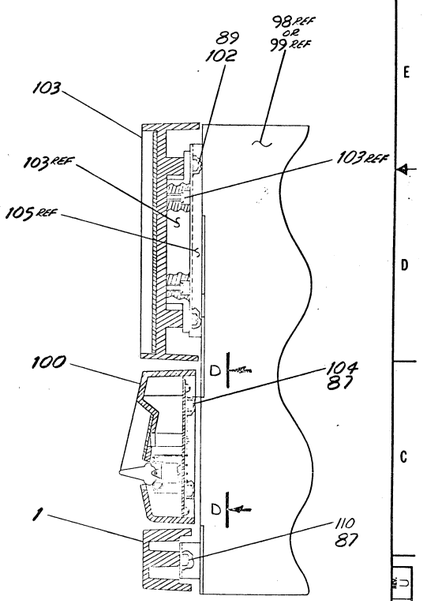

SECTION A-A
SCALE: NONE

FIRST USED ON OPTION/MODEL	QTY.	DESCRIPTION	PART NO.	ITEM NO.
11/05		PARTS LIST		

UNLESS OTHERWISE SPECIFIED DIMENSION IN INCHES TOLERANCES
DECIMALS ANGLES
.XXX ± .005 .XX ± .02 .X ± .1 ±0°30'
BREAK EDGES AND BURR SHARP
FINISH SURFACE QUALITY ✓
MATERIAL —
FINISH —

DRN J CAHILL DATE 8-21-72
CHK C. MACHIL DATE 9-1-72
ENG [illegible] DATE 9-15-72
PROJ [illegible] DATE 9-16-72
PROD [illegible] DATE 9-19-72
NEXT ASSY. B-[illegible]
SCALE NONE

DIGITAL EQUIPMENT CORPORATION
MAYNARD, MASSACHUSETTS

TITLE
16 BIT COMPUTER
(PDP 11/05)

SIZE A NUMBER 11/05-0-0 REV. U

REV. U
DWG. NO. 11/05-0-0

ITEM NO.	DWG. NO./PART NO.	DESCRIPTION	1105-2A	1105-2B	1105-2C	1105-2D	1105-2E	1105-2F	1105-2G	1105-2H	1105-2J	1105-2K	1105-2L	1105-2M	1105-2N	1105-2A	1105-2B	1105-2A	1105-2B	1105-NC	1105-ND
1	D-PS-1211474-0-0	1.75 FILLER STRIP	1	1	1	1	1	1	1	1	1	1	1	1	1	X	X	X	X	1	1
2	D-UA-KY11-UA-0	CONSOLE ASSY	X	X	X	X	X	1	1	1	1	1	1	1	1	X	X	X	X	X	X
3	C-IA-7409460-0-0	COVER, TOP	1	1	1	1	1	1	1	1	1	1	1	1	1	1	1	1	1	X	X
4	B-IA-7409458-0-0	CHASSIS	1	1	1	1	1	1	1	1	1	1	1	1	1	1	1	1	1	X	X
5	D-IA-7409452-0-0	BRACKET CHASSIS SLIDE (L.H.)	1	1	1	1	1	1	1	1	1	1	1	1	1	1	1	1	1	X	X
6	1209401	FAN, SUPER BOXER	2	2	2	2	2	1	1	1	1	1	1	1	1	2	2	2	2	X	X
7	E-PS-1211800-0-0	CARD GUIDE ASSY (L.H.)	1	1	1	1	1	1	1	1	1	1	1	1	1	1	1	1	1	X	X
8	D-AD-7008843-1-0	BACK PANEL ASSY (8K)	1	1	1	1	X	X	X	X	1	1	1	1	1	X	X	X	X	X	X
9	D-AD-7008843-2-0	BACK PANEL ASSY (16K)	X	X	X	X	1	1	1	1	X	X	X	X	X	X	X	X	X	X	X
10	9009191	SCR PHL HD PAN NYLOK *8-32 x 1/4 LG	18	18	18	18	18	18	18	18	18	18	18	18	18	18	18	18	18	X	X
11	D-IA-7008856-0-0	HARNESS (D.C.)	1	1	1	1	1	1	1	1	1	1	1	1	1	1	1	1	1	X	X
12	B-IA-7411167-0-0	RET. CONN. BLOCK (L.H.)	1	1	1	1	1	1	1	1	1	1	1	1	1	1	1	1	1	X	X
13	C-UA-BC05B-0-0	LINE SET BC05H (115V/60HZ)	1	X	1	X	1	X	1	X	1	X	1	X	1	1	X	1	X	X	X
14	C-UA-BC05J-0-0	LINE SET BC05J (230V/50HZ)	X	1	X	1	X	1	X	1	X	1	X	1	X	1	X	1	X	X	X
15	C-IA-7409449-0-0	BRACKET,CHASSIS SLIDE (R.H.)	1	1	1	1	1	1	1	1	1	1	1	1	1	1	1	1	1	X	X
16	E-IA-7008713-0-0	AC INPUT HARNESS	1	1	1	1	1	1	1	1	1	1	1	1	1	1	1	1	1	X	X
17	D-PS-1211381-0-0	AIR BAFFLE	3	3	3	3	3	3	3	3	3	3	3								
18	E-PS-1211099-0-0	CARD GUIDE ASSY REAR	1	1	1	1	1	1	1	1	1	1	1	1	1	1	1	1	1	X	X
19	B-IA-7411186-0-0	RET. CONN. BLOCK FRONT	1	1	1	1	1	1	1	1	1	1	1	1	1	1	1	1	1	X	X
20	D-IA-7409463-0-0	PAN MTG PLATE	1	1	1	1	1	1	1	1	1	1	1	1	1	1	1	1	1	X	X
21	C-MD-7409479-0-0	PLATE, PRESSURE	2	2	2	2	2	2	2	2	2	2	2	2	2	2	2	2	2	X	X
22	9006047-1	SCR PHL HD PAN *8-32 x 2	2	2	2	2	2	2	2	2	2	2	2	2	2	2	2	2	2	X	X
23	D-PS-1210931-0-0	BLOCK, CABLE RETAINING	1	1	1	1	1	1	1	1	1	1	1	1	1	1	1	1	1	X	X
24	C-MD-7409480-0-0	SWIVEL NUT	1	1	1	1	1	1	1	1	1	1	1	1	1	1	1	1	1	X	X
25	D-MD-7409482-0-0	PLATE LOWER RETAINER	1	1	1	1	1	1	1	1	1	1	1	1	1	1	1	1	1	X	X
26	9006024-1	SCR PHL HD PAN *6-32 x 1/2	2	2	2	2	2	2	2	2	2	2	2	2	2	2	2	2	2	X	X
27	9006080	KEP NUT 6-32	6	6	6	6	6	6	6	6	6	6	6	6	6	6	6	6	6	X	X
28	C-PS-1210630-0-0	GUIDE CARD CENTER	2	2	2	2	2	2	2	2	2	2	2	2	2	2	2	2	2	X	X
29	C-IA-7008820-0-0	HEADER CABLE ASSY	1	1	1	1	1	1	1	1	1	1	1	1	1	1	1	1	1	X	X
30	9006074-3	SCR PHL HD TRUSS #10-32 x 5/8	2	2	2	2	2	2	2	2	2	2	2	2	2	2	2	2	2	X	X
31	9009186	SCR PHL HD PAN NYLOC #6-32 x 5/16	6	6	6	6	6	6	6	6	6	6	6	6	6	6	6	6	6	X	X
32	9006071-3	SCR PHL HD TRUSS #10-32 x 3/8	2	2	2	2	2	2	2	2	2	2	2	2	2	2	2	2	2	X	X
33	9007651	WASHER EXT TOOTH #10	6	6	6	6	6	6	6	6	6	6	6	6	6	6	6	6	6	X	X
34	D-IA-7409533-0-0	COVER SIDE	1	1	1	1	1	1	1	1	1	1	1	1	1	1	1	1	1	X	X
35	C-MD-7409591-0-0	CLAMP	1	1	1	1	1	1	1	1	1	1	1	1	1	1	1	1	1	X	X
36	9009173	SCR BINDER HD NYLON #8-32 x 1/4	2	2	2	2	2	2	2	2	2	2	2	2	2	2	2	2	2	X	X
37	9008074	SPACER 1/2" AF x 5/16-#10	2	2	2	2	2	2	2	2	2	2	2	2	2	2	2	2	2	X	X
38	1210945	CHASSIS SLIDE	X	1	1	1	1	1	1	1	1	1	1	X	X	X	X	X	X	X	X
39	9008196	CLIP-ON RECPT.-SOUTHCO #82-47-104-15	4	4	4	4	4	4	4	4	4	4	4	4	4	4	4	4	4	X	X
40	D-MU-1105-02-0	MODULE UTILIZATION (8K)	1	1	1	1	1	1	1	1	1	1	1	1	1	1	1	1	1	X	X
41	D-MU-1105-02-0	MODULE UTILIZATION (16K)	X	X	X	X	1	1	1	1	X	X	X	X	X	X	X	X	X	X	X
42	9009192	SCR PHL HD PAN NYLOC #8-32 x 3/8	6	6	6	6	6	6	6	6	6	6	6	6	6	6	6	6	6	X	X
43	9006065-1	SCR PHL HD PAN #2-56 x 1/2	2	2	2	2	2	2	2	2	2	2	2	2	2	2	2	2	2	X	X

REVISIONS	CHANGE NO.	CHK		REV.
	11/05-00040			A
REVISED & REDRAWN 1-24-72				
M. TITLEBAUM	11/05-00041			H
G. GRAHAM				
	11/05-00046			K
G. GRAHAM 6-4-72				
	11/05-00047			L
G. GRAHAM 7-27-72				
D. RANDALL 8-17-73	11/05-00048			M
G. GRAHAM 9-6-73				
	11/05-00050			N
G. GRAHAM 11-7-73				

UNLESS OTHERWISE SPECIFIED
DIMENSION IN INCHES
TOLERANCES
DECIMALS ± .005 FRACTIONS ± 1/64 ANGLES ± 0°30'
FINAL SURFACE QUALITY
REMOVE BURRS AND BREAK SHARP CORNERS
MATERIAL
FINISH

		DATE
DRN.	J. CARTLL	2/25/2
CHK'D.	C. TUSCHNER	5/2/2
ENG.	A. LYONS	5/15/2
PROJ. ENG.	P. WEEKS	5/16/2
PROC.	R. PEDERSON	5/16/2

NEXT HIGHER ASSY. D-UA-1105-0-0
SCALE
SHEET 1 OF 3

digital EQUIPMENT CORPORATION
MAYNARD, MASSACHUSETTS

TITLE
16 BIT COMPUTER
ASSY (PDP 11Ø5)

SIZE	CODE	NUMBER	REV.
C	PL	11Ø5-0-0	U

DIST.

DEC FORM NO. DRC 110

ITEM NO.	DWG. NO./PART NO.	DESCRIPTION	11Ø5-PA	11Ø5-PB	11Ø5-PE	11Ø5-PF	11Ø5-HA	11Ø5-HB	11Ø5-JA	11Ø5-JB	11Ø5-KA	11Ø5-KB	11Ø5-LA	11Ø5-LB	11Ø5-MA	11Ø5-MB	11Ø5-PA	11Ø5-PB	11Ø5-NC	11Ø5-ND
			QUANTITY / VARIATION																	
44	9006631	WASHER INT TOOTH #2	2	2	2	2	2	2	2	2	2	2	2	2	2	2	2	2	X	X
45	9008442	CABLE CLAMP (1/4)	4	4	4	4	4	4	4	4	4	4	4	4	4	4	4	4	X	X
46	9009210-6	SCOTCH BRAND ADHESIVE TRANSFER TAPE	A/R	A/R	A/R	A/R	A/R	A/R	A/R	A/R	A/R	A/R	A/R	A/R	A/R	A/R	A/R	A/R	X	X
47																				
48	7409729-Ø1	JUMPER POWER (BLACK)	1	1	1	1	1	1	1	1	1	1	1	1	1	1	1	1	X	X
49	7409729-Ø2	JUMPER POWER (RED)	1	1	1	1	1	1	1	1	1	1	1	1	1	1	1	1	X	X
50	9009224	SCR SLOT PAN HD #8-32 x 1/4 LG	10	10	10	10	10	10	10	10	10	10	10	10	10	10	10	10	X	X
51	A-DC-5309900-0-0	POWER CONTROL DECAL (230V)	X	1	X	1	X	1	X	1	X	1	X	1	X	1	X	1	X	X
52	A-DC-5309899-0-0	POWER CONTROL DECAL (115V)	1	X	1	X	1	X	1	X	1	X	1	X	1	X	1	X	X	X
53	B-MD-7409816-0-0 *	SHIPPING BRACKET	2	2	2	2	2	2	2	2	2	2	2	2	2	2	2	2	X	X
54	9008143-1	SCR PHL HD PAN #8-32 X 1/4 THD CUTTING	2	2	2	2	2	2	2	2	2	2	2	2	2	2	2	2	X	X
55	B-MD-7409817-0-0	PLATE, CABLE CLAMP	1	1	1	1	1	1	1	1	1	1	1	1	1	1	1	1	X	X
56	C-MD-7409818-0-0	BRACKET CABLE CLAMP	1	1	1	1	1	1	1	1	1	1	1	1	1	1	1	1	X	X
57	9006011-2	SCR PHL HD FLAT #4-40 X 3/8	2	2	2	2	2	2	2	2	2	2	2	2	2	2	2	2	X	X
58	B-MD-7409828-~~Ø~~-0	BRACKET	1	1	1	1	1	1	1	1	1	1	1	1	1	1	1	1	X	X
59	9007694	QUIK DISCONNECT	1	1	1	1	1	1	1	1	1	1	1	1	1	1	1	1	X	X
60	7409903	JUMPER POWER (BLACK)	1	1	1	1	1	1	1	1	1	1	1	1	1	1	1	1	X	X
61	D-UA-KY11-JC-Ø	CONSOLE ASSY	X	X	X	X	X	X	X	X	X	X	X	X	1	1	1	1	X	X
62	D-MD-7409978-0-0	BOTTOM TRIM	X	X	X	X	X	X	X	X	X	X	X	X	1	1	1	1	X	X
63	D-AD-7009119-0-0	BACK PANEL ASSY	X	X	X	X	X	X	X	X	X	X	X	X	1	1	1	1	X	X
	* USED ONLY WHEN INSTALLED IN CABINET																			
64	D-IA-7409533-1-0	COVER SIDE	X	X	X	X	X	X	X	X	X	X	X	X	1	1	1	1	X	X
65	1700021-0	ELECTROMAGNETIC SHIELD 1 OZ. CU	A/R	A/R	A/R	A/R	A/R	A/R	A/R	A/R	A/R	A/R	A/R	A/R	A/R	A/R	A/R	A/R	I	I
66	E-IA-5309816-0-0	CHASSIS	1	1	1	1	1	1	1	1	1	1	1	1	1	1	1	1	X	X
67	D-IA-7008726-0-0	TRANSFORMER MMC 415° -1	1	1	1	1	1	1	1	1	1	1	1	1	1	1	1	1	X	X
68	9006024-1	SCR PHL PAN HD #6-32 X.50 LG	4	4	4	4	4	4	4	4	4	4	4	4	4	4	4	4	X	X
69	9006021-1	SCR PHL PAN HD #6-32 X.31LG	2	2	2	2	2	2	2	2	2	2	2	2	2	2	2	2	X	X
70	9006031-1	SCR PHL PAN HD #6-32 X1.75 LG	2	2	2	2	2	2	2	2	2	2	2	2	2	2	2	2	X	X
71	9006563	NUT KEPS #8-32	4	4	4	4	4	4	4	4	4	4	4	4	4	4	4	4	X	X
72	9006560	NUT KEPS #6-32	2	2	2	2	2	2	2	2	2	2	2	2	2	2	2	2	X	X
73	9007649	WASHER EXT. LOCK #6-32	6	6	6	6	6	6	6	6	6	6	6	6	6	6	6	6	X	X
74	9007035	GROMMET CATERPILLAR	A/R	A/R	A/R	A/R	A/R	A/R	A/R	A/R	A/R	A/R	A/R	A/R	A/R	A/R	A/R	A/R	X	X
75	E-IA-5409728-0-0	REGULATOR BOARD	1	1	1	1	1	1	1	1	1	1	1	1	1	1	1	1	X	X
76	D-UA-KY11-JF-0	CONSOLE ASSY	1	1	1	1	X	X	X	X	X	X	X	X	X	X	X	X	X	X
77	A-DC-5309413-0-0	SPECIAL DECAL (UL)	1	1	1	1	1	1	1	1	1	1	1	1	1	1	1	1	X	X
78	A-DC-5309414-0-0	SPECIAL DECAL (UL)	1	1	1	1	1	1	1	1	1	1	1	1	1	1	1	1	X	X
79	9008181-1	SCR PHL PAN HD TYPE F 6-32 X .50LG	6	6	6	6	6	6	6	6	6	6	6	6	6	6	6	6	X	X
80	9009525-1	SCR, PHL PAN HD TYPE F 6-32 X .37LG	4	4	4	4	4	4	4	4	4	4	4	4	4	4	4	4	X	X
81	9009070	SCRPHL FLAT HD SPECIAL 8-32X.81LG	4	4	4	4	4	4	4	4	4	4	4	4	4	4	4	4	X	X
82	9009543	FOAM 3/8 X 1 X3 3/4LG	1	1	1	1	1	1	1	1	1	1	1	1	—	—	—	—	X	X
83	9009542	FOAM ½ X 5/16 X7 9/16LG	1	1	1	1	1	1	1	1	1	1	1	1	1	1	1	1	X	X
~~84~~	~~9009544~~	~~FOAM ¼ X ¼ X 16 XLG~~	~~1~~	~~1~~	~~1~~	~~1~~	~~1~~	~~1~~	~~1~~	~~1~~	~~1~~	~~1~~	~~1~~	~~1~~	~~1~~	~~1~~	~~1~~	~~1~~	~~X~~	~~X~~
85	9008848	FIBER WASHER 5/32ID X ½ OD X 3/32	6	6	6	6	6	6	6	6	6	6	6	6	6	6	6	6	X	X
86	A-DC-7411255-0-0	LABEL (REMOVE FOAM)	1	1	1	1	1	1	1	1	1	1	1	1	1	1	1	1	X	X

REVISIONS	CHANGE NO.	CHK	
R	11/05-00052	PM	R. Wyrick 12-18-73
			G. GRAHAM
			G. Graham 1-2-74
S	11/05-00054	PM	J. Chester 2-22-74
			GRAHAM
			G. Graham 3-7-74
T	11/05-00055	PM	R. Wyrick 3-26-74
			B. MINOR
			W. E. Brown 7-29-74
U	11/05-00056	PM	R. Wyrick 4-16-74
			B. ARMSTRONG
			John Bolco 4-24-74

FIRST USED ON OPTION/MODEL
11Ø5

UNLESS OTHERWISE SPECIFIED
DIMENSION IN INCHES
TOLERANCES
DECIMALS ± .005 FRACTIONS ± 1/64 ANGLES ± 0°30'
FINAL SURFACE QUALITY ✓
REMOVE BURRS AND BREAK SHARP CORNERS

MATERIAL

FINISH

DRN. J. CAHILL	DATE 2/25/2	digital EQUIPMENT CORPORATION MAYNARD, MASSACHUSETTS
CHK'D. C. TESCHNER	DATE 5/2/2	TITLE 16 BIT COMPUTER ASSY (PDP 11Ø5)
ENG. A. LYONS	DATE 5/15/2	
PROJ. ENG. B. WEEKS	DATE 5/16/2	
PROD. R. PETERSON	DATE 5/16/2	
NEXT HIGHER ASSY. D-UA-1105-0-0		SIZE C CODE PL NUMBER 11Ø5-0-0 REV. U
SCALE		
SHEET 2 OF 3		DIST.

REV. U
NUMBER 11Ø5-0-0
SIZE C CODE PL

DEC FORM NO. DRC 110

ITEM NO.	DWG. NO./PART NO.	DESCRIPTION	11Ø5-FA	11Ø5-FB	11Ø5-FE	11Ø5-FF	11Ø5-HA	11Ø5-HB	11Ø5-JA	11Ø5-JB	11Ø5-KA	11Ø5-KB	11Ø5-LA	11Ø5-LB	11Ø5-MA	11Ø5-MB	11Ø5-PA	11Ø5-PB	11Ø5-NC	11Ø5-ND
87	9ØØ6635	WASH INT TOOTH #10	X	X	X	X	X	X	X	X	X	X	X	X	X	X	X	X	10	10
88	9ØØ6Ø43-1	SCR PHL HD PAN #8-32 x 1.0 LG	X	X	X	X	X	X	X	X	X	X	X	X	X	X	X	X	4	4
89	9ØØ6Ø35-1	SCR PHL HD PAN #8-32 x .25 LG	X	X	X	X	X	X	X	X	X	X	X	X	X	X	X	X	4	4
90	D-MU-11Ø5-Ø-Ø7	MODULE UTILIZATION (16K)	X	X	X	X	X	X	X	X	X	X	X	X	X	X	X	X	1	1
91	D-UA-7ØØ95Ø5-Ø-Ø	WIRED ASSY	X	X	X	X	X	X	X	X	X	X	X	X	X	X	X	X	1	1
92	B-IA-74Ø9729-Ø3	JUMPER POWER (BlK)	X	X	X	X	X	X	X	X	X	X	X	X	X	X	X	X	1	1
93	B-IA-74Ø9729-Ø4	JUMPER POWER (RED)	X	X	X	X	X	X	X	X	X	X	X	X	X	X	X	X	1	1
94	9ØØ8264	CLAMP	X	X	X	X	X	X	X	X	X	X	X	X	X	X	X	X	4	4
95	9ØØ7Ø33	TIE WRAP	X	X	X	X	X	X	X	X	X	X	X	X	X	X	X	X	2	2
96	9ØØ7649	WASH EXT TOOTH #6	X	X	X	X	X	X	X	X	X	X	X	X	X	X	X	X	2	2
97	9ØØ6Ø2Ø-1	SCR PHL HD PAN #6-32 x .1/4 LG	X	X	X	X	X	X	X	X	X	X	X	X	X	X	X	X	2	2
98	E-UA-BA11-DA-Ø	CHASSIS ASSY (115V)	X	X	X	X	X	X	X	X	X	X	X	X	X	X	X	X	1	X
99	E-UA-BA11-DB-Ø	CHASSIS ASSY (230V)	X	X	X	X	X	X	X	X	X	X	X	X	X	X	X	X	X	1
100	D-UA-KY11-JD-Ø	CONSOLE ASSY	X	X	X	X	X	X	X	X	X	X	X	X	X	X	X	X	1	1
101	9ØØ8442	TIE WRAP	X	X	X	X	X	X	X	X	X	X	X	X	X	X	X	X	8	8
102	9ØØ6634	WASHER INT TOOTH #8	X	X	X	X	X	X	X	X	X	X	X	X	X	X	X	X	8	8
103	A-PL-7ØØ8847-Ø-Ø	BEZEL KIT ASSY	X	X	X	X	X	X	X	X	X	X	X	X	X	X	X	X	1	1
104	9ØØ6Ø71-1	SCR PHL HD PAN #10-32 x .38 LG	X	X	X	X	X	X	X	X	X	X	X	X	X	X	X	X	6	6
105	D-MD-741Ø664-Ø-Ø	CONSOLE MTG BRK'T (10.5)	X	X	X	X	X	X	X	X	X	X	X	X	X	X	X	X	1	1
106	D-IA-7ØØ936Ø-Ø-Ø	CPU POWER HARNESS	X	X	X	X	X	X	X	X	X	X	X	X	X	X	X	X	1	1
107	9ØØ6Ø7Ø-1	SCR PHL HD PAN #10-32 x .31 LG	X	X	X	X	X	X	X	X	X	X	X	X	X	X	X	X	4	4
108	A-DC-741305-0-0	DECAL (10 1/2" MODULE UTILIZATION)	X	X	X	X	X	X	X	X	X	X	X	X	X	X	X	X	1	1
109	9006025-1	PHL PAN HD SCREW 6-32x.62	4	4	4	4	4	4	4	4	4	4	4	4	4	4	4	4	X	X
110	9009573	SCR PHL HD PAN THREAD CUTTING #10-16X5/8 LG	2	2	2	2	2	2	2	2	2	2	2	2	2	2	2	2	2	2
111	A-DC-7409478-0-0	DECAL PATENT	X	X	X	X	X	X	X	X	X	X	X	X	X	X	X	X	1	1
112	A-PI-3700061-0-0	PACKAGING INSTRUCTION (5 1/4)	1	1	1	1	1	1	1	1	1	1	1	1	1	1	1	1	X	X
113	A-PI-37000698-0-0	PACKAGING INSTRUCTION (10 1/2)	X	X	X	X	X	X	X	X	X	X	X	X	X	X	X	X	1	1

QUANTITY / VARIATION

REVISIONS: REV. | CHANGE NO. | CHK

FIRST USED ON OPTION/MODEL: 11Ø5

UNLESS OTHERWISE SPECIFIED
UNLESS OTHERWISE SPECIFIED
DIMENSION IN INCHES
TOLERANCES
DECIMALS ± .005 | FRACTIONS ± 1/64 | ANGLES ± 0°30'
FINAL SURFACE QUALITY √
REMOVE BURRS AND BREAK SHARP CORNERS

MATERIAL —

FINISH —

DRN. J.CAHILL	DATE 2/25/2	
CHK'D. C.TESCHINER	DATE 5/2/72	
ENG. A.LYONS	DATE 5/15/2	
PROJ. ENG. B.WEEKS	DATE 5/16/2	
PROD. R.PETERSON	DATE 5/16/2	

NEXT HIGHER ASSY. B-DD-11Ø5-Ø

SCALE —

SHEET 3 OF 3

digital EQUIPMENT CORPORATION MAYNARD, MASSACHUSETTS

TITLE: 16 BIT COMPUTER ASSY (PDP11Ø5)

SIZE	CODE	NUMBER	REV.
C	PL	11Ø5-Ø-Ø	U

DIST.

DEC FORM NO. DRC 110

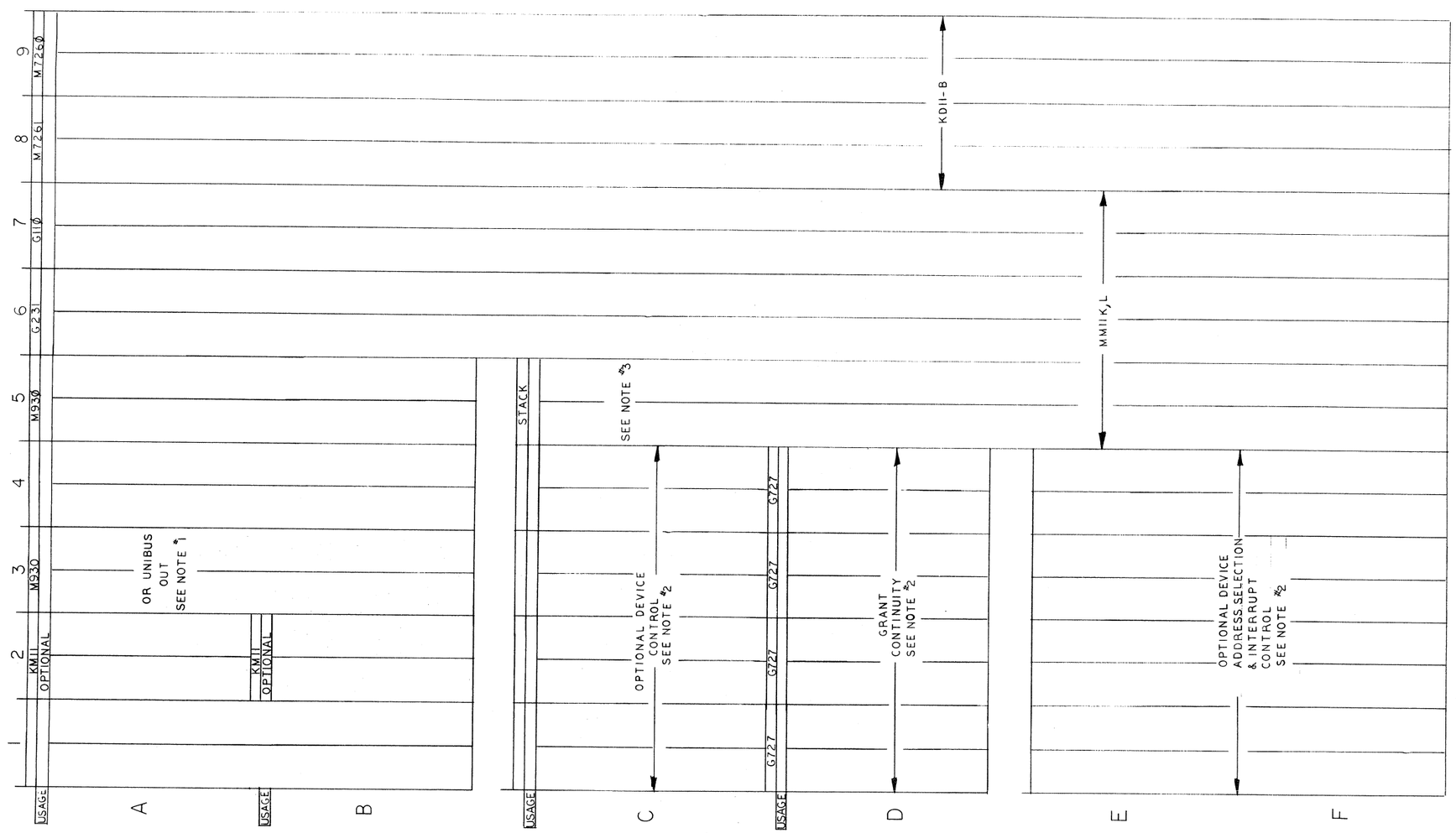

NOTES:

1. BEFORE THE 11Ø5 IS CONNECTED TO OTHER SYSTEM OPTIONS, THE M93Ø BUS TERMINATOR IS IN LOCATION A, BØ3. THIS TERMINATOR IS MOVED TO THE END SYSTEM OPTION UPON INTERCONNECTION

2. PREWIRED MODULE SLOTS FOR SMALL PERIPHERAL OPTIONS. WITH NO OPTIONS INSTALLED, BUS GRANT CONTINUITY IS PROVIDED BY G727 MODULE IN LOCATION DØ1, DØ2, DØ3, DØ4. THE G727 IS REMOVED WHEN A SMALL PERIPHERAL OPTION IS INSTALLED

3. IF MM11-K, STACK IS H213
   IF MM11-L, STACK IS H214

CONFIGURATION #2
(8 K)

ITEM NO.	DESCRIPTION	PART NO.	QTY.
5	CENTRAL PROCESSOR	B-DD-KD11-B-Ø	1
4	GRANT CONTINUITY	A-PL-G727-Ø-Ø	4
3	16BIT 18 MIL MEMORY	B-DD-MM11-L-Ø	1
2	BUS TERMINATOR	A-PL-M93Ø-Ø-Ø	2
1	MAINTENCE BOARDS	A-PL-KM11-Ø-Ø	*

PARTS LIST

FIRST USED ON OPTION/MODEL: PDP-11Ø5

UNLESS OTHERWISE SPECIFIED DIMENSION IN INCHES. TOLERANCES

DECIMALS	ANGLES
.XXX = .005 .XX = .02 .X = .1	±0° 30'

REMOVE BURRS AND BREAK SHARP CORNERS SURFACE QUALITY ✓

MATERIAL: —

FINISH: —

		DATE
DRN.	C. Teschner	4-24-72
CHK'D.		
ENG.		5-4-72
PROJ. ENG.		5-4-72
PROD.		7/18/72

NEXT HIGHER ASSY.: D-UA-11Ø5-Ø-Ø

SCALE: —

SHEET 1 OF 1

digital EQUIPMENT CORPORATION MAYNARD MASSACHUSETTS

TITLE: MODULE UTILIZATION (8K)

SIZE D | CODE MU | NUMBER 11Ø5-Ø-Ø2 | REV.

DIST.

REVISIONS: REV. | CHANGE NO. | CHK

DEC FORM NO. DRD 100-A

SIZE D | CODE MU | NUMBER 11Ø5-Ø-Ø2 | REV.

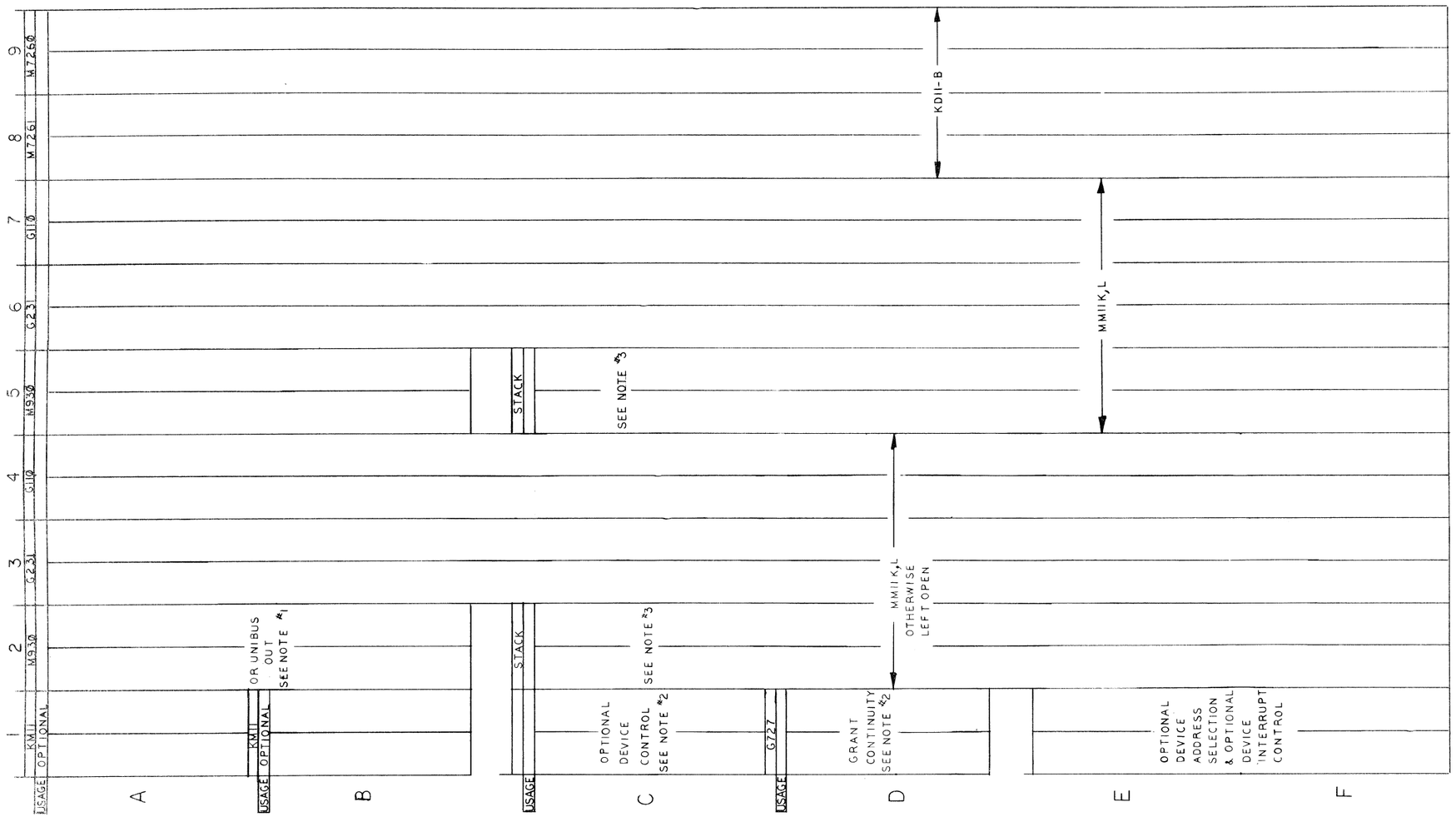

NOTES:

1. BEFORE THE 11Ø5 IS CONNECTED TO OTHER SYSTEM OPTIONS, THE M930 BUS TERMINATOR IS IN LOCATION A, BØ2. THIS TERMINATOR IS MOVED TO THE END SYSTEM OPTION UPON INTERCONNECTION

2. PREWIRED MODULE SLOTS FOR SMALL PERIPHERAL OPTIONS. WITH NO OPTIONS INSTALLED, BUS GRANT CONTINUITY IS PROVIDED BY G727 MODULE IN LOCATION DØ1. THE G727 IS REMOVED WHEN A SMALL PERIPHERAL OPTION IS INSTALLED

3. IF MM11-K, STACK IS H213
   IF MM11-L, STACK IS H214

CONFIGURATION #1
(16K)

ITEM NO.	DESCRIPTION	PART NO.	QTY.
5	CENTRAL PROCESSOR	B-DD-KD11-B-Ø	1
4	GRANT CONTINUITY	A-PL-G727-Ø-Ø	1
3	16BIT 18 MIL MEMORY	B-DD-MM11-L-Ø	1
2	BUS TERMINATOR	A-PL-M93Ø-ØØ	2
1	MAINTENCE BOARDS	A-PL-KM11-Ø-Ø	*

PARTS LIST

FIRST USED ON OPTION/MODEL: PDP-11Ø5

UNLESS OTHERWISE SPECIFIED DIMENSION IN INCHES. TOLERANCES

DECIMALS	ANGLES
.XXX = .005	±0° 30'
.XX = .02	
.X = .1	

REMOVE BURRS AND BREAK SHARP CORNERS SURFACE QUALITY ✓

MATERIAL —/—/—

FINISH —/—/—

		DATE
DRN.	C. Teschner	4-24-72
CHK.	[illegible]	5-4-72
ENG.	[illegible]	5-4-72
PROJ/ENG.	[illegible]	5-9-72
PROD.	[illegible]	5/17/72

NEXT HIGHER ASSY. D-UA-11Ø5-Ø-Ø

SCALE —/—/—

SHEET 1 OF 1

digital EQUIPMENT CORPORATION MAYNARD, MASSACHUSETTS

TITLE MODULE UTILIZATION (16K)

SIZE D CODE MU NUMBER 11Ø5-Ø-Ø1 REV.

DIST.

REVISIONS: REV. / CHANGE NO. / CHK.

DEC FORM NO DRD 100-A

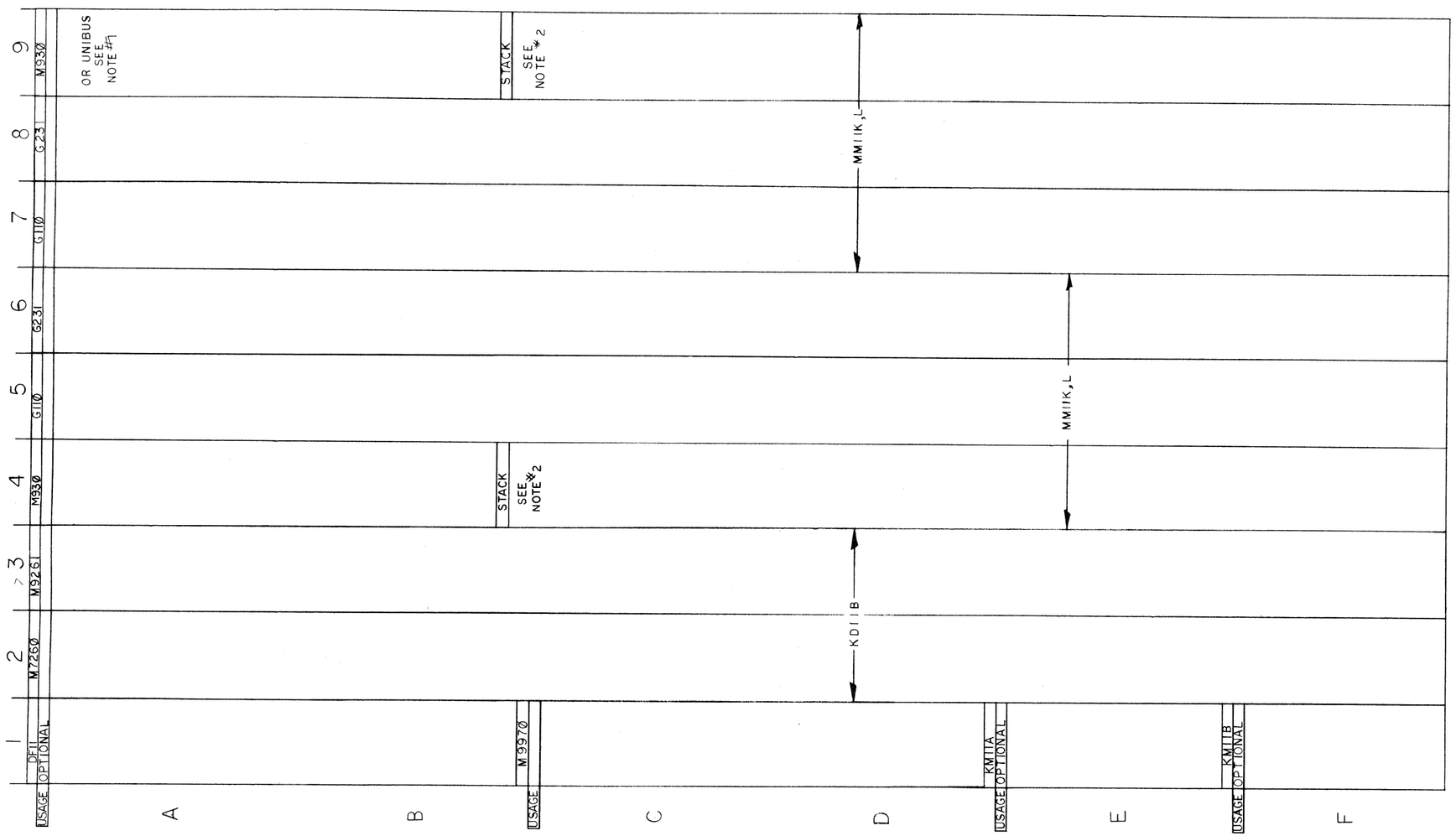

NOTES:

1. BEFORE THE 11Ø5 IS CONNECTED TO OTHER SYSTEM OPTIONS, THE M93Ø BUS TERMINATOR IS IN LOCATION A,BØ9. THIS TERMINATOR IS MOVED TO THE END SYSTEM OPTION UPON INTERCONNECTION.
2. IF MM11-K, STACK IS H213; IF MM11-L, STACK IS H214.

ITEM NO.	PART NO.	DESCRIPTION	QTY.
5	D-CS-M9970-Ø-1	M9970	1
4	B-DD-KD11-B-Ø	CENTRAL PROCESSOR	1
3	B-DD-MM11-L-Ø	16 BIT 18 MIL MEMORY	1
2	A-PL-M93Ø-ØØ	BUS TERMINATOR	2
1	A-PL-KM11-Ø-Ø	MAINTENCE BOARDS	*

PARTS LIST

FIRST USED ON OPTION/MODEL: PDP-11/Ø5

UNLESS OTHERWISE SPECIFIED DIMENSION IN INCHES. TOLERANCES

DECIMALS	ANGLES
.XXX = .005 .XX = .02 .X = .1	±0° 30'

REMOVE BURRS AND BREAK SHARP CORNERS SURFACE QUALITY ✓

MATERIAL —

FINISH —

		DATE
DRN.	K. Harris	12-11-72
CHK'D		1-11-73
ENG.		1-11-73
PROJ. ENG.		1-11-73
PROD.		1-21-73

NEXT HIGHER ASSY. D-UA-11Ø5-Ø-Ø

SCALE —

SHEET 1 OF 1

digital EQUIPMENT CORPORATION MAYNARD MASSACHUSETTS

TITLE MODULE UTILIZATION (16K)

SIZE	CODE	NUMBER	REV.
D	MU	11Ø5-Ø-Ø7	

DIST.

REVISIONS

CHK	CHANGE NO.	REV

fio uns ... 4 4.77

digital EQUIPMENT CORPORATION
MAYNARD, MASSACHUSETTS

DRAWING DIRECTORY

CUSTOMER PRINT SET INDEX

SEQUENCE	SEQUENCE
16 BIT PROCESSOR KD11-B	B-DD-KD11-B
MICROPROGRAM FLOW	K-MP-KD11-B-1
MICROPROGRAM SYMBOLIC LISTING	K-MP-KD11-B-2
MICROPROGRAM BINARY LISTING	K-MP-KD11-B-3
MICROPROGRAM CROSS REF. LISTING	K-MP-KD11-B-4
DATA PATHS	E-CS-M726Ø-Ø-1
DATA PATH ROM PATTERNS	K-RL-M726Ø-Ø-8
CONTROL LOGIC & MICROPROGRAMS	E-CS-M7261-Ø-1
CONTROL LOGIC ROM PATTERNS	K-RL-M7261-Ø-8

THIS IS PRINT SET X

UNIT VARIATIONS

VARIATION	TITLE	PRINT SET TYPE: KD11-B
KD11-B	16 BIT PROCESSOR	

REVISIONS		
REV	DWG NO.	DATE
A	KD11-B-1	
B	KD11-B-3	
C	KD11-B-4	
D	KD11-B-5	

USED ON OPTION/MODEL

DRN. J.CAHILL	DATE 4/21/72	TITLE 16 BIT PROCESSOR KD11-B
CHK'D. C. Teschner	DATE 5-15-72	
PROJ ENG. A. Tacker	DATE 5-16-72	
PROD.	DATE	
FIELD SERV.	DATE	

SIZE	CODE	NUMBER	REV
B	DD	KD11-B	D

SHEET OF DIST

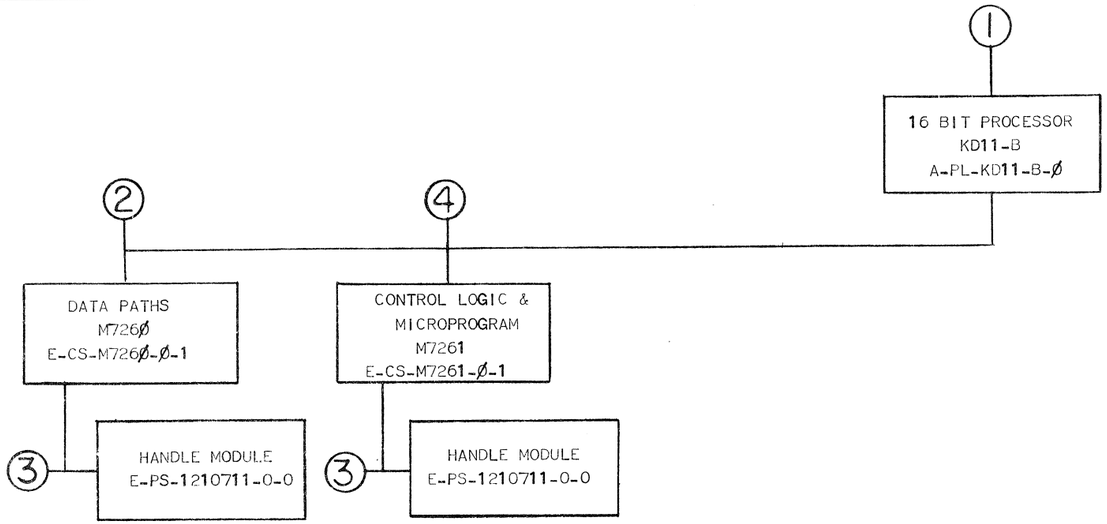

TITLE		SIZE	CODE	NUMBER	REV
16 BIT PROCESSOR KD11-B	SHEET 2 OF 3	B	DD	KD11-B	D

ELECTRICAL

CUSTOMER PRINT SET KD11-B	MFG. SET	FIND NO.	DRAWING NO.	REV	NO OF SHT	DESCRIPTION	OPTION NO.
		1.	A-PL-KD11-B-Ø		1	16 BIT PROCESSOR (KD11-B)	
C			K-MP-KD11-B-1	B	22	MICOPROGRAM FLOW	
C			K-MP-KD11-B-2	D	6	MICROPROGRAM SYMBOLIC LISTING	
C			K-MP-KD11-B-3	D	7	MICROPROGRAM BINARY LISTING	
C			K-MP-KD11-B-4		3	MICROGROGRAM CROSS REF. LISTING	
X		2.	E-CS-M726Ø-Ø-1	#	10	DATA PATHS (M726Ø)	
			B-MH-M726Ø-Ø-6		1	MODULE ECO HISTORY	
			K-CO-M726Ø-Ø-4		1	X-Y CO-ORDINATE HOLE LOCATION	
			B-AH-M726Ø-Ø-5		1	ASSY/DRILLING HOLE	
X			K-RL-M726Ø-Ø-8	#	15	DATA PATH ROM PATTERNS	
X		4.	E-CS-M7261-Ø-1	#	13	CONTROL LOGIC & MICROPROGRAM	
			B-MH-M7261-Ø-6		1	MODULE ECO HISTORY	
			K-CO-M7261-Ø-4		1	X-Y CO-ORDINATE HOLE LOCATION	
			B-AH-M7261-Ø-5		1	ASSY/DRILLING HOLE	
X			K-RL-M7261-Ø-8	#	57	CONTROL LOGIC ROM PATTERNS	

MECHANICAL

CUSTOMER PRINT SET KD11-B	MFG. SET	FIND NO.	DRAWING NO.	REV	NO OF SHT	DESCRIPTION	OPTION NO.
		1.	A-PL-KD11-B-Ø		1	16 BIT PROCESSOR (KD11-B)	
		2.	E-CS-M726Ø-Ø-1		10	DATA PATHS (M726Ø)	
			B-MH-M726Ø-Ø-6		1	MODULE ECO HISTORY	
			K-CO-M726Ø-Ø-4		1	X-Y CO-ORDINATE HOLE HISTORY	
			B-AH-M726Ø-Ø-5		1	ASSY/DRILLING HOLE	
		3.	E-PS-1210711-0-0		1	HANDLE MODULE	
		4.	E-CS-M7261-Ø-1		13	CONTROL LOGIC & MICROPROGRAM	
			B-MH-M7261-Ø-6		1	MODULE ECO HISTORY	
			K-CO-M7261-Ø-4		1	X-Y CO-ORDINATE HOLE LOCATION	
			B-AH-M7261-Ø-5		1	ASSY/DRILLING HOLE	

TITLE	SHEET	OF	SIZE	CODE	NUMBER	REV
16 BIT PROCESSOR KD11-B			B	DD	KD11-B	D

DRB 108

DEC - 16- (325)-1062-2A-R272

PAGE REVISION CONTROL SHEET

SH NO.	PAGE REVISIONS																			REMARKS
1	A	B																		
2	A	A																		
3	A	A																		
4	A	A																		
5	A	A																		
6	A	A																		
7	A	B																		
8	A	A																		
9	A	A																		
10	A	A																		
11	A	A																		
12	A	A																		
13	A	A																		
14	A	A																		
15	A	A																		
16	A	A																		
17	A	A																		
18	A	A																		
19	A	A																		
20	A	A																		
21	A	A																		
22	A	A																		
ECO NO.	KD112-2	KD112-3																		
ETCH REV.																				
ENG.	BA	MT																		
DATE	8-28-72	9-21-72																		

FIRST USED ON OPTION/MODEL

KD11-B

DRN. G. TOWNE	DATE 8-21-72	digital EQUIPMENT CORPORATION MAYNARD MASSACHUSETTS	
CHK'D. J McCullough	DATE 8-21-72		
ENG. Bob Armstrong	DATE 8-29-72	TITLE MICROPROGRAM FLOW	
PROJ. ENG. Bob Armstrong	DATE 8-29-72		
PROD.	DATE		

NEXT HIGHER ASSY.	SIZE	CODE	NUMBER	REV.
B-DD-KD11-B	K	MP	KD11-B-1	B
SCALE —				
SHEET 1 OF 22	DIST.			

```
/               NOTES ON NOTATION:
/
/                       1.  MICROROUTINES BEGIN WITH A COMMENT
/                       THE FIRST CHARACTER OF WHICH IS '*'.
/
/                       2.  ALL OTHER COMMENTS BEGIN WITH '/'.
/
/                       3.  R[N] REFERRS SCRATCH PAD REGISTER N.
/                       R[7] IS ALSO REFERRED TO AS 'PC'.
/
/                       4.  R[S] REFERRS TO THAT REGISTER SPECIFIED
/                       IN THE SOURCE PORTION OF THE CURRENT INST.
/                       (IR<11:9>).  LIKEWISE, R[D] REFERRS TO THAT
/                       REG SPECIFIED IN THE DESTINATION PORTION OF
/                       THE CURRENT INST. (IR<2:0>).
/
/                       5.  K[N] REFERRS TO THAT LOCATION OF THE
/                       CONSTANTS CHIP CONTAINING THE CONSTANT N.
/
/                       6.  'BUT' STANDS FOR 'BRANCH ON MICRO TEST'.


LOC  NXT  * INSTRUCTION FETCH
062  053  F=1   BA=PC; DATI
053  365  F=2   B=PC+2
365  364  F=3   PC=B; CKOFF
364  061  F=4   B;IR=UNIBUS DATA
061  001  F=5   B=B SEX; BUT IR DECODE
          / IF DOUBLE OP INST GOTO S0=1 THRU S7=1 DEPENDING ON SOURCE MODE
          / IF SINGLE OP INST GOTO D0=1 THRU D7=1 DEPENDING ON DEST MODE (INCLUDING JSR)
          / IF BRANCH, CHANGE PC GOTO B=1
          / IF BRANCH, PC UNCHANGED GOTO B2=2
          / IF CLEAR OR SET COND CODE(S) GOTO CCM=1
          / IF INST=RTS GOTO R1=1
          / IF INST=RTI GOTO R2=1
          / IF INST=WAIT GOTO W=1
          / IF INST=HALT GOTO H=1
          / IF INST=RESET GOTO RST=1
          / IF INST=EMT GOTO E7=1
          / IF INST=BREAKPOINT TRAP GOTO B7=1
          / IF INST=IOT GOTO I7=1
          / IF INST=TRAP GOTO T=1
          / IF RESERVED INST (NONE OF THE ABOVE) GOTO RT=1
```


K-MP-KD11-B-1
rev. B

```
LOC  NXT  * SOURCE MODE 0 (REGISTER), GET SOURCE DATA
          / GET TO S0=1 FROM F=5 VIA BUT IR DECODE IR<11:9>=0
201  007  S0=1  B=R[S]; BUT BYTE
          / IF BYTE INST GOTO SBE=1 (MUST BE EVEN BYTE)
007  001  S0=2  R[10]=B; BUT DESTINATION
          / IF IR<5:3>  =0 GOTO D0=1
          /             =1      D1=1
          /             =2      D2=1
          /             =3      D3=1
          /             =4      D4=1
          /             =5      D5=1
          /             =6      D6=1
          /             =7      D7=1


LOC  NXT  * SOURCE MODE 1 (REG. DEFERRED) GET SOURCE DATA
          / GET TO S1=1 FROM F=5 VIA BUT IR DECODE IR<11:9>
203  244  S1=1  BA=R[S]; DATI; CKOFF; ALBYT
          / GET TO S1=2 FROM S2=3 VIA GOTO
          /          "        S3=5    "
          /          "        S6=5    "
244  007  S1=2  B=UNIBUS DATA; BUT BYTE; GOTO S0=2
          / IF ODD BYTE GOTO SBO=1
          / IF EVEN BYTE GOTO SBE=1
          / IF NOT BYTE FALL THROUGH TO S0=2


LOC  NXT  * SOURCE MODE 2 (AUTO-INC.) GET SOURCE DATA
          / GET TO S2=1 FROM F=5 VIA BUT IR DECODE IR<11:9>=2
205  301  S2=1  BA=R[S]; DATI; ALBYT
301  014  S2=2  B=R[S]+1+BYTE;BAR
          / GET TO S2=3 FROM S4=1 VIA GOTO
014  244  S2=3  R[S]=B; CKOFF; GOTO S1=2


LOC  NXT  *SOURCE MODE 3 (AUTO-INC DEFERRED) GET SOURCE DATA
          / GET TO S3=1 FROM F=5 VIA BUT IR DECODE IR<11:9>=3
207  016  S3=1  BA=R[S]; DATI (MUST BE AN EVEN ADDRESS HERE)
016  017  S3=2  B=R[S]+2
```

```
          / GET TO S3=3 FROM S5=1 VIA GOTO
017  134  S3=3  R[S]=B; CKOFF
          / GET TO S3=4 FROM S7=5 VIA GOTO
134  274  S3=4  B=UNIBUS DATA
274  244  S3=5  BA=B; DATI; CKOFF; GOTO S1=2; ALBYT



LOC  NXT  * SOURCE MODE 4 (AUTO-DEC) GET SOURCE DATA
          / GET TO S4=1 FROM F=5 VIA BUT IR DECODE IR<11:9>=4
211  014  S4=1  B,BA=R[S]=1-BYTE,BAR; DATI; ENABOVER; GOTO S2=3; ALBYT



LOC  NXT  * SOURCE MODE 5 (AUTO-DEC DEFERRED) GET SOURCE DATA
          / GET TO S5=1 FROM F=5 VIA BUT IR DECODE IR<11:9>=5
213  017  S5=1  B,BA=R[S]=2; DATI(MUST BE AN EVEN ADDRESS HERE); ENABOVER; GOTO S3=3



LOC  NXT  * SOURCE MODE 6 (INDEXED) GET SOURCE DATA
          / GET TO S6=1 FROM F=5 VIA BUT IR DECODE IR<11:9>=6
215  025  S6=1  BA=PC; DATI(MUST BE EVEN ADDRESS HERE)
025  026  S6=2  B=PC+2
026  027  S6=3  PC=B; CKOFF
027  030  S6=4  B=UNIBUS DATA
030  244  S6=5  BA=B+R[S]; DATI; CKOFF; GOTO S1=2; ALBYT



LOC  NXT  * SOURCE MODE 7 (INDEXED DEFERRED) GET SOURCE DATA
          / GET TO S7=1 FROM F=5 VIA BUT IR DECODE IR<11:9>=7
217  032  S7=1  BA=PC; DATI(MUST BE AN  EVEN ADDRESS HERE)
032  033  S7=2  B=PC+2
033  034  S7=3  PC=B; CKOFF
034  035  S7=4  B=UNIBUS DATA
035  134  S7=5  BA=B+R[S]; DATI(MUST BE AN EVEN ADDRES) ; CKOFF; GOTO S3=4
```



```
LOC  NXT  * SOURCE BYTE ODD
          / GETE TO SB0=1 FROM S1=2 VIA BUT BYTE (BYTE INST, AND SOURCE DATA ODD ADDR)
067  346  SB0=1 SHIFT B RIGHT; F SHIFT
346  324  SB0=2 SHIFT B RIGHT; F SHIFT
324  340  SB0=3 SHIFT B RIGHT; F SHIFT
340  361  SB0=4 SHIFT B RIGHT; F SHIFT
361  050  SB0=5 SHIFT B RIGHT; F SHIFT
050  020  SB0=6 SHFIT B RIGHT; F SHIFT
020  052  SB0=7 SHIFT B RIGHT; F SHIFT
052  047  SB0=8 SHIFT B RIGHT; GOTO SBE=1



LOC  NXT  * SOURCE EVEN BYTE
          / GET TO SBE=1 FROM SB0=8 VIA GOTO
          / GET TO SBE=1 FROM S1=2 VIA BUT BYTE; (BYTE INST AND SOURCE DATA EVEN ADDR)
          / GET TO SBE=1 FROM S0=1 VIA BUT BYTE; (BYTE INST,)
047  001  SBE=1 R[10]=B SEX; BUT DESTINATION
          / IF IF<5:3>  =0 GOTO D0=1
          /    "                =1  "   D1=1
          /    "                =2  "   D2=1
          /    "                =3  "   D3=1
          /    "                =4  "   D4=1
          /    "                =5  "   D5=1
          /    "                =6  "   D6=1
          /    "                =7  "   D7=1



LOC  NXT  * DEST, MODE 0 (REGISTER), GET DEST DATA, OP, AND REPLACE
          / GET TO D0=1 FROM S0=2 VIA BUT DESTINATION (IR<5:3>=0)
          / GET TO D0=1 FROM SBE=1 VIA BUT DESTINATION (IR<5:3>=0)
101  154  D0=1  B=R[D]; BUT MOVE
          / IF INST=MOVE,BAR (OTHER THAN MOVE) AND BYTE GOTO DB0=1
          / IF INST=MOVE AND BYTE GOTO MB=0
          / IF INST=MOVE AND BYTE,BAR GOTO D0=3A
          / IF INST=MOVE,BAR AND BYTE,BAR FALL THROUGH TO D0=2
157  142  D0=2  R[11]=B; BUT UNARY
          / IF INST=JMP OR JSR GOTO ERV=1 (ILLEGAL INST, TRAP)
          / IF INST=SWAB GOTO SB1=1
          / IF INST=OTHER UNARY(CLR,COM,INC,DEC,NEG,ADC,SBC,TST,ROR,ROL,ASR,ASL) GOTO U1=1
          / GET TO D0=3 FROM U1=1 VIA GOTO
          / GET TO D0=3 FROM D0=1 VIA BUT BYTE (INST=MOVE AND BYTE,BAR)
```

```
162  332  D0-3  B-R[10] OP B; BUT NONMOD
          / SEE DESCRIPTION OF AUXILLARY ALU CONTROL (AUX CONTROL)
          / FOR MORE DETAILS ON WHAT /OP/ ACCOMPLISHES
          / THERE EXISTS A D03-A WHICH IS IDENTICAL TO D0-3 EXCEPT LOC=155
          / GET TO D0-3A FROM SB1-8 VIA GOTO
          / IF NONMOD GOTO B2-2 (BUT SERVICE)
          / IF NOT NONMOD FALL THROUGH TO D0-4
          / GET TO D0-4 FROM R1-6 VIA GOTO
332  040  D0-4  R[D]-B; BUT SERVICE
          / PRIORITIES ARE LISTED HIGHEST TO LOWEST
          / IF T BIT TRAP GOTO BT-1
          / IF STACK OVERFLOW GOTO ERTEA
          / IF POWERFAIL GOTO PF-1
          / IF BR7 GOTO BG-1
          / IF BR6 GOTO BG-1
          / IF INTERNAL LINE CLOCK GOTO LC-1
          / IF BR5 GOTO BG-1
          / IF BR4 GOTO BG-1
          / IF UATR RECEIVE GOTO URTR
          / IF UART TRANSMIT GOTO URTX
          / IF CONSOLE STOP GOTO H-1
          / IF NONE OF THE ABOVE GOTO F-1


LOC  NXT  * DEST, MODE 1 (REG,DEFERRED) GET DEST DATA, OP, AND REPLACE
          / GET TO D1-1 FROM S0-2 VIA BUT DESTINATION (IR<5:3>=1)
          / GET TO D1-1 FROM SBE-1 VIA BUT DESTINATION (IR<5:3>=1)
103  200  D1-1  B,BA-R[D]; DATIP; BUT JSRMP; ALBT; CKOFF
          / NOTE DATA IN PAUSE HERE
          / IF INST=JMP GOTO J1-1
          / IF INST=JSR GOTO J2-1
          / IF INST NOT JMP OR JSR FALL THROUGH TO D1-2
          / GET DO D1-2 FROM D2-3 VIA GOTO
          / GET TO D1-2 FROM D3-5 VIA GOTO
          / GET TO D1-2 FROM D6-5 VIA GOTO
200  210  D1-2  B-UNIBUS DATA; BUT BYTE
          / IF ODD BYTE GOTO D0-1
          / IF EVEN BYTE GO TO DE-1
          / IF NOT BYTE FALL THROUGH TO D1-3
210  143  D1-3  R[11]-B; BUT UNARY
          / IF INST=SWAB GOTO SB2-1
          / IF INST=OTHER UNARY (CLR, COM,INC,DEC,NEG,ADC, SBC,TST,ROR,ROL,ASR,ASL) GOTO U2-1
          / GET TO D1-4 FROM DE-1 VIA BUT UNARY (NON UNARY)
          / GET TO D1-4 FROM U2-1 VIA GOTO
          / GET TO D1-4 FROM SB2-8 VIA GOTO
163  334  D1-4  B-R[10] OP B; BUT NONMOD
          / SEE DESCRIPTION OF AUXILLARY ALU CONTROL (AUX CONROL)
          / FOR MORE DETAILS ON WHAT /OP/ ACCOMPLISHES
```



```
          / IF NONMOD GOTO B2-2 (BUT SERVICE)
          / IF NOT NONMOD FALL THROUGH TO D1-5
334  065  D1-5  DATO; ALBYT; CKOFF
          / GET TO D1-6 FROM DO-18 VIA GOTO
065  305  D1-6  DRIVERS-B; GOTO B2-2 (BUT SERVICE)


LOC  NXT  * DEST MODE 2 (AUTO-INC) GET DEST DATA, OP AND REPLACE
          / GET TO D2-1 FROM S0-2 VIA BUT DESTINATION (IR<5:3>=2)
          / GET TO D2-1 FROM SBE-1 VIA BUT DESTINATION (IR<5:3>=2)
105  331  D2-1  BA-R[D]; DATIP; ALBYT
          / NOTE DATA IN PAUSE HERE
331  341  D2-2  B-R[D]+1-BYTE,BAR
          / GET TO D2-3 FROM D4-1 VIA GOTO
341  200  D2-3  R[D]-B; BUT JSRMP; GOTO D1-2; CKOFF
          / IF INST=JMP GOTO J1-1
          / IF INST=JSR GOTO J2-1
          / IF INST NOT JMP OR JSR FALL THROUGH TO D1-2


LOC  NXT  * DEST MODE 3 (AUTO-INC DEFERRED) GET DEST DATA, OP AND REPLACE
          / GET TO D3-1 FROM S0-2 VIA BUT DESDTINATION (IR<5:3>=3)
          / GET TO D3-1 FROM SBE-1 VIA BUT DESTINATION (IR<5:3>=3)
107  160  D3-1  BA-R[D]; DATI
160  070  D3-2  B-R[D]+2
          / GET TO D3-3 FROM D5-1 VIA GOTO
070  071  D3-3  R[D]-B; CKOFF
          / GET TO D3-4 FROM D7-5 VIA GOTO
071  072  D3-4  B-UNIBUS DATA
072  200  D3-5  BA-B; DATIP; BUT JSRMP; GOTO D1-2; ALBYT; CKOFF
          / NOTE DATA IN PAUSE HERE
          / IF INST=JMP GOTO J1-1
          / IF INST=JSR GOTO J2-1
          / IF INST NOT JMP OR JSR FALL THROUGH TO D1-2


LOC  NXT  * DEST MODE 4(AUTO-DEC) GET DEST DATA, OP AND REPLACE
          / GET TO S4-1 FROM S0-2 VIA BUT DESTINATRON (IR<5:3>=4)
          / GET TO S4-1 FROM SBE-1 VIA BUT DESTINATION (IR<5:3>=4)
111  341  D4-1  B,BA-R[D]-1-BYTE,BAR; DATIP; ENABOVER; GOTO D2-3; ALBYT
```

```
LOC  NXT  * DEST MODE 5 (AUTO-DEC DEFERRED) GET DEST DATA, OP, AND REPLACE
          / GET TO D5=1 FROM S0=2 VIA BUT DESTINATION (IR<5:3>=5)
          / GET TO D5=1 FROM SBE=1 VIA BUT DESTINATION (IR<5:3>=5)
113  070  D5=1  B,BA=RED]=2; DATI; ENABOVER; GOTO D3=3
```

```
LOC  NXT  * DEST MODE 6 (INDEXED) GET DTA,OP, AND REPLACE
          / GET TO D6=1 FROM S0=2 VIA BUT DESTINATION (IR<5:3>=6)
          / GET TO D6=1 FROM SBE=1 VIA BUT DESTINAITON (IR<5:2>=6)
115  075  D6=1  BA=PC; DATI
075  077  D6=2  B=PC+2
077  057  D6=3  PC=B; CKOFF
057  300  D6=4  B=UNIBUS DATA
300  200  D6=5  B,BA=B+RED]; DATIP; BUT JSRMP; GOTO D1=2; ALBYT; CKOFF
          / NOTE DATA IN PUASE HERE
          / IF INST=JMP GOTO J1=1
          / IF INST=JSR GOTO J2=1
          / IF INST NOT JMP OR JSR FALL THROUGH TO D1=2
```

```
LOC  NXT  * DEST MODE 7 (INDEXED DEFERRED) GET DEST DATA,OP, AND REPLACE
          / GET TO D7=1 FROM S0=2 VIA BUT DESTINATION (IR<5:3>=7)
          / GET TO D7=1 FROM SBE=1 VIA BUT DESTINATION (IR<5:3>=7)
117  310  D7=1  BA=PC; DATI
310  104  D7=2  B=PC+2
104  320  D7=3  PC=B; CKOFF
320  106  D7=4  B=UNIBUS DATA
106  071  D7=5  BA=B+RED]; DATI; CKOFF; GOTO D3=4
```

```
LOC  NXT  * DESTINATION MODE 0, BYTE
          / GET TO DB0=1 FROM B0=1 VIA BUT BYTE (BYTE INST AND MOVE,BAR)
156  144  DB0=1 R[11],B=B SEX; BUT UNARY
          / IF UNARY OTHER THAN JSR, JMP, OR SWAB (CLR,COM,INC,DEC,NEG,ADC,SBC,TST,ROR,ROL,ASR,ASL) GOTO U3=1
```



```
          / IF NOT UNARY FALL THROUGH TO DB0=2
164  304  DB0=2 B=R[10] OP B; BUT NONMOD
          / SEE DESCRIPTION OF AUXILLARY ALU CONROL (AUX CONTROL)
          / FOR MORE DETAILS ON WHAT 'OP' ACCOMPLISHES
          / IF NONMOD GOTO B2=2 (SERVICE)
          / IF NOT NONMOD FALL THRU TO DB0=3
304  040  DB0=3 R[D]<7:0>=B; BUT SERVICE; GOTO F=1
          / PRIORITIES ARE LISTED HIGHEST TO LOWEST
          / IF T BIT TRAP GOTO BT=1
          / IF STACK OVERFLOW GOTO ERT1A
          / IF POWER FAIL GOTO PF=1
          / IF BR7 GOTO BG=1
          / IF BR6 GOTO BG=1
          / IF INTERNAL LINE CLOCK GOTO LC=1
          / IF BR5 GOTO BG=1
          / IF BR4 GOTO BG=1
          / IF UART RECEIVE GOTO URTR
          / IF UART TRANSMIT GOTO URTX
          / IF CONSOLE STOP GOTO H=1
          / IF NONE OF THE ABOVE GOTO F=1
```

```
LOC  NXT  * DESTINATION ODD BYTE
          / GET TO D0=1 FROM DI=2 VIA BUT BYTE (BYTE INST AND ODD ADDR)
270  123  D0=1  SHIFT B RIGHT; F SHIFT
123  124  D0=2  SHIFT B RIGHT; F SHIFT
124  125  D0=3  SHIFT B RIGHT; F SHIFT
125  126  D0=4  SHIFT B RIGHT; F SHIFT
126  127  D0=5  SHIFT B RIGHT; F SHIFT
127  130  D0=6  SHIFT B RIGHT; F SHIFT
130  131  D0=7  SHIFT B RIGHT; F SHIFT
131  132  D0=8  SHIFT B RIGHT
132  145  D0=9  R[11],B=B SEX; BUT UNARY
          / IF UNARY OTHER THAN JSR, JMP, OR SWAB (CLR,COM,INC,DEC,NEG,ADC,SBC,TST,ROR,ROL,ASR,ASL) GOTO U4=1
          / IF NOT UNARY FALL THROUGH TO D0=10
165  342  D0=10 B=R[10] OP B; BUT NONMOD
          / SEE DESCRIPTION OF AUXILLARY ALU CONTROL (AUX CONROL)
          / FOR MORE DETAILS ON WHAT 'OP' ACCOMPLISHES
          / IF NONMOD GOTO B2=2 (BUT SERVICE)
          / IF NOT NONMOD FALL THROUGH TO D0=11
342  135  D0=11 SHIFT B LEFT; F SHIFT
135  136  D0=12 SHIFT B LEFT; F SHIFT
136  137  D0=13 SHIFT B LEFT; F SHIFT
137  140  D0=14 SHIFT B LEFT; F SHIFT
140  141  D0=15 SHIFT B LEFT; F SHIFT
141  142  D0=16 SHIFT B LEFT; F SHIFT
142  143  D0=17 SHIFT B LEFT; F SHIFT
143  065  D0=18 SHIFT B LEFT; DATO; CKOFF; GOTO D1=6; ALBYT
```

```
LOC  NXT  * DESTINATION EVEN BYTE
          / GET TO DE=1 FROM DI=2 VIA BUT BYTE (BYTE INST AND EVEN ADDR)
250  163  DE=1  R[11]=B SEX; GOTO DI=4; BUT UNARY
          / IF UNARY OTHER THAN JSR,JMP, OR SWAB (CLR,COM,INC,DEC,ADC,SBC,TST,ROR,ASR,ASL) GOTO U5=1
          / IF NOT UNARY FALL THROUGH TO DI=4


LOC  NXT  * UNARY OPERATORS GET SINGLE OPERAND IN B AND R[10]
          / CKOFF IN EACH OF THE FOLLOWING (U1=1, U2=1, U3=1, U4=1, AND U5=1)
          / GIVES THE AUX CONTROL SUFFICIENT TIME TO DO ITS THING;
          / THAT IS,,, REMAIN IN CURRENT STATE (MICRO STEP) FOR TWO
          / PROCESSOR CKOCK PERIODS SO THAT THE CONDITION CODE LOGIC
          / WAS SUFFICIENT TIME TO SETTLE;
          / GET TO U1=1 FROM D0=2 VIA BUT UNARY (INST=CLR,COM,INC,DEC,NEG,ADC,SBC,TST,ROR,ROL,ASR,ASL)
352  162  U1=1  R[10]=B; CKOFF; GOTO D0=3
          / GET TO U2=1 FROM DI=3 VIA BUT UNARY (INST=CLR,COM,,,,ASL) SEE U1=1
353  163  U2=1  R[10]=B; CKOFF; GOTO DI=4
          / GET TO U3=1 FROM DB0=1 VIA BUT UNARY (INST=CLR,COM,,,,ASL) SEE U1=1
354  164  U3=1  R[10]=B; CKOFF; GOTO DB0=2
          / GET TO U4=1 FROM D0=9 VIA BUT UNARY (INST=CLR,COM,,,,ASL) SEE U1=1
355  165  U4=1  R[10]=B; CKOFF; GOTO D0=10
          / GET TO U5=1 FROM DE=1 VIA BUT UNARY (INST=CLR,COM,,,,ASL) SEE U1=1
373  163  U5=1  R[10]=B; CKOFF; GOTO DI=4


LOC  NXT  * MOVB INST
          / GET TO MB=0 FROM D0=1 VIA BUT MOVE (INST=MOVE AND BYTE)
154  240  MB=0  CKOFF
          / CKOFF IN MB=0 GIVES THE AUX CONTROL SUFFICIENT TIME TO DO ITS THING;
          / THAT IS,, REMAIN IN CURRENT STATE (MICRO STEP) FOR TWO
          / PROCESSOR CLOCK PERIODS SO THAT THE CONDITION CODE LOGIC
          / WAS SUFFICIENT TIME TO SETTLE;
240  152  MB=1  B=R[10]
152  040  MB=2  R[D]=B SEX; BUT SERVICE
          / PRIORITIES ARE LISTED HIGHEST TO LOWEST
          / IF T BIT TRAP GOTO BT=1
          / IF STACK OVERFLOW GOTO ERT1A
          / IF POWER FAIL GOTO PF=1
```



```
          / IF BR7 GOTO BG=1
          / IF BR6 GOTO BG=1
          / IF INTERNAL LINE CLOCK GOTO LC=1
          / IF BR5 GOTO BG=1
          / IF BG4 GOTO BG=1
          / IF UART RECEIVE GOTO URTR
          / IF UART TRANSMIT GOTO URTX
          / IF CONSOLE STOP GOTO H=1
          / IF NONE OF THE ABOVE GOTO F=1


LOC  NXT  * BRANCH, CHANGE PC
015  147  B=1   SHIFT B LEFT
147  146  B=2   B=PC+B
146  040  B=3   PC=B; BUT SERVICE
          / PRIORITIES ARE LISTED HIGHEST TO LOWEST
          / IF T BIT TRAP GOTO BT=1
          / IF STACK OVERFLOW GOTO ERT1A
          / IF POWER FAIL GOTO  PF=1
          / IF BR7 GOTO BG=1
          / IF BR6  GOTO BG=1
          / IF INTERNAL LINE CLOCK GOT LC=1
          / IF BR5 GOTO BG=1
          / IF BR4 GOTO BG=1
          / IF UART RECEIVE GOTO URTR
          / IF UART TRANSMIT GOTO URTX
          / IF CONSOLE STOP GOTO H=1
          / IF NONE OF THE ABOVE GOTO F=1


LOC  NXT  * CONDITION CODE MASK (FOR BOTH SET AND CLEAR)
151  350  CCM=1 B=B AND K[17]
350  112  CCM=2 BUT DEST
          / IF INST= SET, GO TO SC=1
          / IF INST= CLEAR, GOTO CC=1


LOC  NXT  * CLEAR CONDITION CODES
112  040  CC=1  PSW=PSW AND (B'BAR); BUT SERVICE
          / THIS EFFECTIVELY CLEARS THOSE BITS OF THE PSW WHICH ARE SET
```

```
          / IN THE B REG, B,BAR IS B REGISTER COMPLEMENTED.
          / PRIORITIES ARE LISTED HIGHEST TO LOWEST
          / IF T BIT BRAP GOTO BT=1
          / IF STACK OVERFLOW GOTO ERT1A
          / IF POWER FAIL GOTO PF=1
          / IF BR7 GOTO BG=1
          / IF BR6 GOTO BG=1
          / IF INTERNAL LINE CLOCK GOTO LC=1
          / IF BR5 GOTO BG=1
          / IF BR4 GOTO BG=1
          / IF UART RECEIVE GOTO URTR
          / IF UART TRNASMIT GOTO URTX
          / IF CONSOLE STOP GOTO H=1
          / IF NONE OF THE ABOVE GOTO F=1


LOC  NXT  * SET CONDITION CODES
116  040  SC=1  PSW=PSW OR B; BUT SERVICE
          / PRIORITIES ARE LISTED HIGHEST TO LOWEST
          / IF T BIT TRAP GOTO BT=1
          / IF STACK OVERFLOW GOTO ERT1A
          / IF POWER FAIL GOTO PF=1
          / IF BR7 GOTO BG=1
          / IF BR6 GOTO BG=1
          / IF INTERNAL LINE CLOCK GOTO LC=1
          / IF BR5 GOTO BG=1
          / IF BR4 GOTO BG=1
          / IF UART RECEIVE GOTO URTR
          / IF UART TRANSMIT GOTO URTX
          / IF CONSOLE STOP GOTO H=1
          / IF NONE OF THE ABOVE GOTO F=1


LOC  NXT  * SWAB, MODE 0
          / GET TO SB1=1 FROM D0=2 VIA BUT UNARY (INST=SWAB AND MODE=0)
          / ROTATE LEFT ACCOMPLISHED VIA ASR
166  172  SB1=1 ROTATE B LEFT; F SHIFT
172  173  SB1=2 ROTATE B LEFT; F SHIFT
173  174  SB1=3 ROTATE B LEFT; F SHIFT
174  144  SB1=4 ROTATE B LEFT; F SHIFT
144  176  SB1=5 ROTATE B LEFT; F SHIFT
176  177  SB1=6 ROTATE B LEFT; F SHIFT
177  006  SB1=7 ROTATE B LEFT; F SHIFT
006  155  SB1=8 ROTATE B LEFT; GOTO D0=3A
```



```
LOC  NXT  * SWAB, NOT MODE 0
          / GET TO SB2=1 FROM D1=3 VIA BUT UNARY (INST=SWAB)
          / ROTATE LEFT ACCOMPLISHED VIA ASR
167  012  SB2=1 ROTATE B LEFT; F SHIFT
012  220  SB2=2 ROTATE B LEFT; F SHIFT
220  022  SB2=3 ROTATE B LEFT; F SHIFT
022  023  SB2=4 ROTATE B LEFT; F SHIFT
023  024  SB2=5 ROTATE B LEFT; F SHIFT
024  031  SB2=6 ROTATE B LEFT; F SHIFT
031  330  SB2=7 ROTATE B LEFT; F SHIFT
330  163  SB2=8 ROTATE B LEFT; GOTO D1=4


LOC  NXT  * JMP
          / GET TO J1=1 FROM D1=1 VIA BUT JSRMP (INST=JMP)
          / GET TO J1=1 FROM D2=3 VIA BUT JSRMP (INST=JMP)
          / GET TO J1=1 FROM D3=5 VIA BUT JSRMP (INST=JMP)
          / GET TO J1=1 FROM D6=5 VIA BUT JSRMP (INST=JMP)
204  260  J1=1  NOP
          / J1=1 MUST BE A NOP BECAUSE FOLLOWING A CKOFF, THE AMX WILL
          / BE FORCED TO TAKE DATA FROM THE UNIBUS.
260  040  J1=2  PC=B; BUT SERVICE
          / PRIORITIES ARE LISTED HIGHEST TO LOWEST
          / IF T BIT TRAP GOTO BT=1
          / IF STACK OVERFLOW GOTO ERT1A
          / IF POWER FAIL GOTO PF=1
          / IF BR7 GOTO BG=1
          / IF BR6 GOTO BG=1
          / IF INTERNAL LINE CLOCK GOTO LC=1
          / IF BR5 GOTO BG=1
          / IF BR4 GOTO BG=1
          / IF UART RECEIVE GOTO URTR
          / IF UART TRANSMIT GOTO URTX
          / IF CONSOLE STOP GOTO H=1
          / IF NONE OF THE ABOVE GOTO F=1
```

```
LOC  NXT  * JSR
          / GET TO J2=1 FROM D1=1 VIA BUT JSRMP (INST=JSR)
          / GET TO J2=1 FROM D2=3 VIA BUT JSRMP (INST=JSR)
          / GET TO J2=1 FROM D3=5 VIA BUT JSRMP (INST=JSR)
          / GET TO J2=1 FROM D4=4 VIA BUT JSRMP (INST=JSR)
212  261  J2=1  NOP
          / J2=1 MUST BE A NOP BECAUSE FOLLOWING A CKOFF, THE AMX WILL BE
          / FORCED TO TAKE DATA FROM THE UNIBUS.
201  262  J2=1A R[11]=B
202  214  J2=2  B,BA=R[6]=2; ENABOVER
214  206  J2=3  R[6]=B; CKOFF; DATO
206  216  J2=4  DRIVERS=R[S]
216  263  J2=5  B=PC
203  264  J2=6  R[S]=B
204  265  J2=7  B=R[11]
205  040  J2=8  PC=B; BUT SERVICE
          / PRIORITIES ARE LISTED HIGHEST TO LOWEST
          / IF T BIT TRAP GOTO BT=1
          / IF STACK OVERFLOW GOT ERT1A
          / IF POWER FALIL GOTO PF=1
          / IF BR7 GOTO BG=1
          / IF BR6 GOTO BG=1
          / IF INTERNAL LINE CLOCK GOTO LC=1
          / IF BR5 GOTO BG=1
          / IF BR4 GOTO BG=1
          / IF UART RECEIVE GOTO URTR
          / IF UART TRANSMIT GOTO URTX
          / IF CONSOLE STOP GOTO H=1
          / IF NONE OF THE ABOVE GOTO F=1
```

```
LOC  NXT  * RTS
          / GET TO R1=1 FROM F=5 VIA BUT IR DECODE (INST=RTS)
005  221  R1=1  BA=R[6]; DATI
221  222  R1=2  B=R[6]+2
222  223  R1=3  R[6]=B
223  224  R1=4  B=R[D]
224  225  R1=5  PC=B; CKOFF
225  332  R1=6  B=UNIBUS DATA; GOTO D0=4
```

```
LOC  NXT  * RTI
          / GET TO R2=2 FROM F=5 VIA BUT IR DECODE (INST=RTI)
227  230  R2=1  BA=R[6]; DATI
230  231  R2=2  B=R[6]+2
```



```
231  232  R2=3  R[6]=B; CKOFF
232  234  R2=4  PC=UNIBUS DATA
          / THERE IS NO R2=5 (ANY MORE)
234  235  R2=6  BA=R[6]; DATI
235  236  R2=7  B=R[6]+2
236  237  R2=8  R[6]=B; CKOFF
237  305  R2=9  PS=UNIBUS DATA; GOTO B2=2 (BUT SERVICE)
```

```
LOC  NXT  * WAIT
          / GET TO W=1 FROM F=5 VIA BUT IR DECODE (INST=WAIT)
          / GET TO W=1 FROM W=1 VIA GOTO IF BUT SERVICE IS FALSE
063  040  W=1   BUT SERVICE
          / THE MICRO PROGRAM WILL LOOP ON W=1 UNTIL SOME HIGHER
          / PRIORITY CONDITION IS RECOGNIZED BY THE 'BUT SERVICE' ROM SEE F101 ON
          / THE CONE PRINT.
          / PRIORITIES ARE LISTED HIGHEST TO LOWEST
          / IF T BIT TRAP GOTO BT=1
          / IF STACK OVERFLOW GOTO ERT1A
          / IF POWER FAIL GOT PF=1
          / IF BR7 GOTO BG=1
          / IF BR6 GOTO BG=1
          / IF INTERNAL LINE CLOCK GOTO LC=1
          / IF BR5 GOTO BG=1
          / IF BR4 GOTO BG=1
          / IF UART RECEIVE URTR
          / IF UART TRANSMIT TOTO URTX
          / IF CONSOLE STOP GOTO H=1
          / IF NONE OF THE ABOVE TOTO F=1
```

```
LOC  NXT  * HALT
          / GET TO H=1 FROM F=5 VIA BUT IR DECODE (INST=HALT)
          / GET TO H=1 FROM BUT SERVICE
041  302  H=1   B=PC
          / DISPLAY PC IN LIGHTS BY PUTTING IT INTO B
          / GET TO H=2 FROM CE1=3 VIA GOTO
          / GET TO H=2 FROM CD1=5 VIA GOTO
          / GET TO H=2 FROM CL=3 VIA GOTO
302  300  H=2   BA=R[17]; BUT SWITCH
          / THE BA IS LOADED HERE SO THAT THE ADDRESS WILL BE INCREMENTED BY +1 WHEN EXAMINING (DEPOSITING INT
          / AND BY +2 WHEN EXAMINING (DEPOSITING INTO) SUCCESSIVE CORE MEMORY.
          / IF START DEPRESSED GOTO CS=1
          / IF CONTINUE DEPRESSED GOTO CCS=1
```

```
        / IF EXAMINE (1 ST) GOTO CE1=1

        / IF EXAMINE (NOT 1 ST) GOTO CE2=1
        / IF DEPOSIT (1 ST) GOTO CD1=1
        / IF DEPOSIT (NOT 1 ST) GOT CD2=1
        / IF LOAD GOTO CL=1
        / IF NO SWITCHES ARE DEPRESSED LOOP ON H=2


LOC  NXT  * EMT TRAP (VECTOR LOC=30)
          / GET TO ET=1 FROM F=5 VIA BUT IR DECODE (INST=EMT)
011  245  ET=1  B=K[30]
          / GET TO ET=2 FROM BT=1 VIA GOTO
          / GET TO ET=2 FROM IT=1 VIA GOTO
          / GET TO ET=2 FROM T=1 VIA GOTO
          / GET TO ET=1 FROM RT=1 VIA GOTO
          / GET TO ET=2 FROM ERT=1 VIA GOTO
          / GET TO ET=2 FROM PF=1 VIA GOTO
245  246  ET=2  R[12]=B
246  247  ET=3  B;BA=R[6]=2; ENABOVER
          / ET=4 HAS BEEN ELIMINATED
247  226  ET=5  R[6]=B; CKOFF; DATO
226  251  ET=6  DIRVERS=PS
251  252  ET=7  B;BA=R[6]=2; ENABOVER
252  253  ET=8  R[6]=B; CKOFF; DATO
253  254  ET=9  DIRVERS=PC
254  255  ET=10 BA=R[12]; DATI; CKOFF
255  256  ET=11 PC=UNIBUS DATA
256  257  ET=12 BA=R[12]+2; DATI; CKOFF
257  305  ET=13 PS=UNIBUS DATA;  GOTO B2=2 (SERVICE)


LOC  NXT  * BREAKPOINT TRAP (VECTOR LOC=14) AND T BIT TRACE TRAP
          / GET TO BT=1 FROM ALL BUT SERVICE
          / GET TO BT=1 FROM F=5 VIA BUT IR DECODE (INST=BREAKPOINT)
045  245  BT=1  B=K[14]; GOTO ET=2


LOC  NXT  * IOT (VECTOR LOC=20)
          / GET TO IT=1 FROM F=5 VIA BUT IR DECODE (INST=IOT
273  245  IT=1  B=K[20]; GOTO ET=2
```



```
LOC  NXT  * TRAP (VECTOR LOC=34)
          / GET TO T=1 FROM F=5 VIA BUT IR DECODE (INST=TRAP)
021  245  T=1   B=K[34]; GOTO ET=2


LOC  NXT  * RESERVED INST TRAP (VECTOR LOC=10)
          / GET TO RT=1 FROM F=5 VIA BUT IR DECODE (INST=NON VALID)
001  245  RT=1  B=K[10]; GOTO ET=2


LOC  NXT  * ERROR TRAP (BUS ERROR, STACK OVERFLOW, ILLEGAL INST) VECTOR LOC=4
          / THERE EXISTS ERT=1 (LOC=10) FOR BUS ERROR
          / THERE ALSO EXISTS ERT1A (LOC=46) FOR STACK OVERFLOW
          / ERT1A GOES TO ET2=2, A SEQUENCE WHICH DOESN'T HAVE THE
          / ENABOVER,  WE DON'T WANT TO LOOK FOR STACK OVERFLOW WHILE
          / DOING THE STACK OVERFLOW TRAP;  THE ET2=2 SEQUENCE REJOINS THE ET SEQUENCE AT ET=8
          / THERE ALSO EXISTS ERT1B (LOC=153) FOR ILLEGAL INST (JSR OR JMP; MODE 0)
010  245  ERT=1 B=K[4]; GOTO ET=2


LOC  NXT  * CONSOLE START SWITCH
          / GET TO CS=1 FOLLOWING RELEASE OF START SWITCH;
100  322  CS=1  IR=ZERO
          / CLOCKING THE IR TURNS ON THE RUN LIGHT
322  321  CS=2  BA;B=R[17]
321  040  CS=3  PC=B; BUT SERVICE
          / PRIOIRTIES ARE LISTED HIGHEST TO LOWEST
          / IF T BIT BRAP GOTO BT=1
          / IF STACK OVERFLOW GOTO ERT1A
          / IF POWER FAIL GOTO PF=1
          / IF BR7 GOTO BG=1
          / IF BR6 GOTO BG=1
          / IF INTERNAL LINE CLOCK GOTO LC=1
          / IF BR5 GOTO BG=1
```

```
          / IF BR4 GOTO BG=1
          / IF UART RECEIVE GOTO URTR
          / IF UART TRANSMIT GOTO URTX
          / IF CONSOLE STOP GOTO H=1
          / IF NONE OF THE ABOVE GOTO F=1


LOC  NXT  * CONSOLE EXAMINE SWITCH= FIRST TIME IN SEQUENCE (DON'T INC R[17])
          / GET TO CE1=1 FROM H=2 VIA BUT SWITCH
          / GET TO CE1=1 FROM CE2=2 VIA GOTO
317  307  CE1=1 BA,B=R[17]; BUT SWITCH
          / DISPLAY ADDRESS BY PUTTING INTO THE B REGISTER WHILE EXAMINE IS DOWN
          / LOOP ON CE1=1 UNTIL SWITCH IS RELEASED
307  326  CE1=2 DATI; CKOFF
326  302  CE1=3 B=UNIBUS DATA; GOTO H=2


LOC  NXT  * CONSOLE EXAMINE SWITCH = OTHER THAN FIRST IN SEQUENCE (INC R[17])
          / GET TO CE2=1 FROM H=2 VIA BUT SWITCH
315  371  CE2=1 B=R[17]+2
          / R[17] IS IN BA FROM H=2, THIS WILL CAUSE +2 TO BECOME +1 WHEN EXAMINING REGISTERS.
371  317  CE2=2 R[17]=B; GOTO CE1=1


LOC  NXT  * CONSOLE DEPOSIT SWITCH = FIRST TIME IN SEQUENCE (DON'T INC R[17])
          / GET TO CD1=1 FROM H=2 VIA BUT SWITCH
          / GET TO CD1=1 FROM CD2=2 VIA GOTO
313  303  CD1=1 B=R[17]; BUT SWITCH
          / LOOP ON CD1=1 UNTIL DEPOSIT SWITCH IS RELEASED
303  374  CD1=2 BA=K[207],BAR; DATI; CKOFF
          / COMPLEMENT OF 207 = 177570 = SWITCH REGISTER ADDRESS
374  314  CD1=3 B=UNIBUS DATA
314  372  CD1=4 BA=R[17]; DATO; CKOFF
372  302  CD1=5 DRIVERS=B; GOTO H=2
```



```
LOC  NXT  * CONSOLE DEPOSIT SWITCH = OTHER THAN FIRST IN SEQENCE (INC R[17])
          / GET TO CD2=1 FROM H=3) VIA BUT SWITCH
312  337  CD2=1 B=R[17]+2
          / R[17] IS IN BA, THIS WILL CAUSE +2 TO BECOME +1 WHEN DEPOSITING INTO REGISTERS
337  313  CD2=2 R[17]=B; GOTO CD1=1


LOC  NXT  * CONSOLE CONTINUE SWITCH
          / GET TO CCS=1 FROM H=2 VIA BUT SWITCH
316  276  CCS=1 B=PC
276  270  CCS=2 BUT SWITCH
272  062  CCS=3 IR=ZERO; GOTO F=1
          / CLOCKING THE IR TURNS ON THE RUN LIGHT


LOC  NXT  * CONSOLE LOAD SWITCH
          / GET TO CL=1 FROM H=2 VIA BUT SWITCH
311  375  CL=1  BA=K[207],BAR; DATI; CKOFF
          / COMPLEMENT OF 207 = 177570 = SWITCH REGISTER ADDRSS
375  367  CL=2  B=UNIBUS DATA
367  302  CL=3  R[17]=B; GOTO H=2
          / CL=3 GOES TO H=2 VIA GOTO, IF LOAD IS STILL DEPRESSED, THE BUT
          / SWITCH IN H=2 WILL TAKE US BACK TO CL=1.  THUS, AS LONG AS LOAD IS
          / DEPPRESSED, CHANGES IN THE SWITCHES WILL SHOW UP IN THE B REG (LIGHTS) AND IN R[17].


LOC  NXT  * POWER FAIL (VECTOR LOC=24)
          / GET TO PF=1 FROM SERVICE
043  245  PF=1  B=K[24]; GOTO ET=2


LOC  NXT  * RESTART FROM POWER FAIL (VECTOR LOC=24)
          / GET TO RS=1 MYSTERIOUSLY AS POWER COMES UP ( NXT CHIPS, F092 AND F103 SHOWN ON THE CONP PRINT,
          / ARE DISABLED FORCING THE MICROPROGRAM TO RS=1 IN LOC 0.
000  241  RS=1  BA=K[24]; DATI
241  347  RS=1A CKOFF
```

```
          / MUST DO CKOFF IN RS=1A BECAUSE OF CONFLICT BETWEEN
          / CKOFF AND INIT CREATED BY CKOFF ASSOCIATED WITH AUX CONTROL
367  074  RS=2  PG=UNIBUS DATA
074  351  RS=3  BA=K[2430+2]; DATI; CKOFF
351  309  RS=4  PG=UNIBUS DATAI  GOTO B2=2 (SERVICE)


LOC  NXT  * INTERRUPT SERVICING
          / GET TO INT=1 FROM BC=2 VIA BUT INT (TRUE)
325  246  INT=1 R[123]=UNIBUS DATA; SET SLAVESYNC; GOTO ET=3


LOC  NXT  * BUS GRANT SERVICE
          / GET TO BG=1 FROM BUT SERVICE
040  305  BG=1  BUT INTERRUPT; GOTO B2=2 (BUT SERVICE)
          / IF INTERRUPT GOTO INT=1
          / IF NO INTERRUPT FALL THROUGH TO B2=2


LOC  NXT  * NOP = BRANCH CONDITION NOT TRUE (PC UNCHANGED)
          / B2=1 HAS BEEN ELIMINATED BECAUSE NEWI IS NO LONGER
          / GET TO B2=2A FROM D0=3 VIA BUT NONMOD (TRUE)
          / GET TO B2=2B FROM D1=4 VIA BUT NONMOD (TRUE)
          / GET TO B2=2C FROM D0=10 VIA BUT NONMOD (TRUE)
          / GET TO B2=2D FROM F=5 VIA BUT IR DECODE, BRANCH INST, CONDITION NOT TRUE
          / GET TO B2=2 FROM RST=1 VIA GOTO
          / GET TO B2=2 FROM D0=4 VIA GOTO
          / GET TO B2=2 FROM DB0=2  VIA BUT NONMOD (TRUE)
          / GET TO B2=2 FROM MB=2 VIA GOTO
          / GET TO B2=2 FROM CC=1 VIA GOTO
          / GET TO B2=2 FROM SC=1 VIA GOTO
          / GET TO B2=2 FROM J2=8 VIA GOTO
          / GET TO B2=2 FROM RS=10 VIA GOTO
          / GET TO B2=2 FROM ET=13 VIA GOTO
305  040  B2=2  BUT SERVICE
          / PRIORITIES ARE LISTED HIGHEST TO LOWEST
          / IF T BIT TRAP GOTO BT=1
          / IF STACK OVERFLOW GOTO ERT1A
          / IF POWER FAIL GOTO PF=1
          / IF BR7 GOTO BG=1
```



```
          / IF BR6 GOTO BG=1
          / IF INTERNAL LINE CLOCK GOTO LC=1
          / IF BR5 GOTO BG=1
          / IF BR4 GOTO BG=1
          / IF UART RECEIVE GOTO URTR
          / IF UART TRANSMIT GOTO URTX
          / IF CONSOLE STOP GOTO H=1
          / IF NONE OF THE ABOVE GOTO F=1


LOC  NXT  * RESET
          / GET TO RST=1 FROM F=5 VIA BUT IR DECODE (INST=RESET)
357  305  RST=1 BUT INIT; CKOFF; GOTO B2=2 (BUT SERVICE)


LOC  NXT  * DOUBLE BUS ERROR, GOTO HALT
110  041  DBE=1 NOP; GOTO H=1


LOC  NXT  * UART XMIT (VECTOR LOC 64)
060  245  URTX  B=K[64]; GOTO ET=2


LOC  NXT  * UART RECEIVE (VECTOR LOC 60)
064  245  URTR  B=K[60]; GOTO ET=2


LOC  NXT  * LINE CLOCK (VECTOR LOC 100)
042  245  LC=1  B=K[100]; GOTO ET=2
```

```
ERT1A NOT EXPLICITLY SHOWN IN FLOW
DØ-3A NOT EXPLICITLY SHOWN IN FLOW
A145  NOT EXPLICITLY SHOWN IN FLOW
ET2-2 NOT EXPLICITLY SHOWN IN FLOW
ET2-3 NOT EXPLICITLY SHOWN IN FLOW
ET2-5 NOT EXPLICITLY SHOWN IN FLOW
ET2-6 NOT EXPLICITLY SHOWN IN FLOW
ET2-7 NOT EXPLICITLY SHOWN IN FLOW
ERT1B NOT EXPLICITLY SHOWN IN FLOW
B2-2A NOT EXPLICITLY SHOWN IN FLOW
B2-2B NOT EXPLICITLY SHOWN IN FLOW
B2-2C NOT EXPLICITLY SHOWN IN FLOW
B2-2D NOT EXPLICITLY SHOWN IN FLOW
```

PAGE REVISION CONTROL SHEET

SH NO.	PAGE REVISIONS																				REMARKS
1	A	B	C	D																	
2	A	A	A	A																	
3	A	B	B	B																	
4	A	A	B	C																	
5	A	A	A	B																	
6	A	A	A	A																	
ECO NO.	00002	KD11B 00003	KD11B 00004	KD11B - 00005																	
ETCH REV.																					
ENG.	BA	MT	MT	DR																	
DATE	8-21-72	7-3-72	11-30-72	8-15-73																	

FIRST USED ON OPTION/MODEL

KD11-B

DRN.		DATE 8-21-72
CHK'D.		DATE 8-21-72
ENG.	E. ARMSTRONG	DATE 8-29-72
PROJ. ENG.	B. ARMSTRONG	DATE 8-29-72
PROD.		DATE

digital EQUIPMENT CORPORATION
MAYNARD MASSACHUSETTS

TITLE

MICROPROGRAM SYMBOLIC LISTING

NEXT HIGHER ASSY.: B-DD-KD11-B

SCALE: —

SHEET 1 OF 6

SIZE	CODE	NUMBER	REV.
K	MP	KD11-B-2	D

DIST.

NAME	LOC	ABT	ALG	ALU	AUX	BAR	BLG	BRG	BUT	CON	CKO	CRI	FSH	PSW	SAM	SPA	SPF	TNS	NXT
A145	145	YES	PSW	AA	ON	L	+1	H	MOV	NON	ON	OFF	OFF	L	ROM	R0	WRI	ERO	
B-1	015	NO	SP	ASL	OFF	H	BRG	SL	NON	NON	OFF	OFF	OFF	H	ROM	R0	REA	NON	B-2
B-2	147	NO	SP	A+B	OFF	H	BRG	L	NON	NON	OFF	OFF	OFF	H	ROM	R7	REA	NON	B-3
B-3	146	NO	SP	BL	OFF	H	BRG	H	SRV	NON	OFF	OFF	OFF	H	ROM	R7	WRI	NON	BG-1
B2-2	305	NO	SP	AL	OFF	H	BRG	H	SRV	NON	OFF	OFF	OFF	H	ROM	R0	REA	NON	BG-1
B2-2A	333	NO	SP	AL	OFF	H	BRG	H	SRV	NON	OFF	OFF	OFF	H	ROM	R0	REA	NON	BG-1
B2-2B	335	NO	SP	AL	OFF	H	BRG	H	SRV	NON	OFF	OFF	OFF	H	ROM	R0	REA	NON	BG-1
B2-2C	343	NO	SP	AL	OFF	H	BRG	H	SRV	NON	OFF	OFF	OFF	H	ROM	R0	REA	NON	BG-1
B2-2D	013	NO	SP	AL	OFF	H	BRG	H	SRV	NON	OFF	OFF	OFF	H	ROM	R0	REA	NON	BG-1
BG-1	040	NO	SP	AL	OFF	H	BRG	H	INT	NON	OFF	OFF	OFF	H	ROM	R0	REA	NON	B2-2
BI-1	045	NO	NUL	AL	OFF	H	BRG	L	CON	14	OFF	OFF	OFF	H	ROM	R0	WRI	NON	EI-2
CG-1	112	NO	PSW	ABBAR	OFF	H	BRG	H	SRV	NON	OFF	OFF	OFF	L	ROM	R0	REA	NON	BG-1
CGM-1	151	NO	NUL	AANDB	OFF	H	BRG	L	CON	360	OFF	OFF	OFF	H	ROM	R0	WRI	NON	CGM-2
CGM-2	350	NO	SP	AL	OFF	H	BRG	H	DSI	NON	OFF	OFF	OFF	H	ROM	R0	REA	NON	CG-1
CGS-1	316	NO	SP	AL	OFF	H	BRG	L	NON	NON	OFF	OFF	OFF	H	ROM	R7	REA	NON	CGS-2
CGS-2	276	NO	SP	AL	OFF	H	BRG	H	SW	NON	OFF	OFF	OFF	H	ROM	R0	REA	NON	DO-1
CGS-3	272	NO	SP	ZERO	OFF	H	BRG	H	IRC	NON	OFF	OFF	OFF	H	ROM	R0	REA	NON	F-1
CD1-1	313	NO	SP	AL	OFF	H	BRG	L	SW	NON	OFF	OFF	OFF	H	ROM	R17	REA	NON	CD1-2
CD1-2	303	NO	NUL	ABAR	OFF	L	BRG	H	CON	207	ON	OFF	OFF	H	ROM	R0	WRI	I	CD1-3
CD1-3	374	NO	NUL	AL	OFF	H	BRG	L	NON	NON	OFF	OFF	OFF	H	BAR	R0	REA	NON	CD1-4
CD1-4	314	NO	SP	AL	OFF	L	BRG	H	NON	NON	ON	OFF	OFF	H	ROM	R17	REA	O	CD1-5
CD1-5	372	NO	SP	BL	OFF	H	BRG	H	NON	NON	OFF	OFF	OFF	H	BAR	R0	REA	NON	H-2
CD2-1	312	NO	SP	A+B	OFF	H	+1	L	NON	NON	OFF	ON	OFF	H	ROM	R17	REA	NON	CD2-2
CD2-2	337	NO	SP	BL	OFF	H	BRG	H	NON	NON	OFF	OFF	OFF	H	ROM	R17	WRI	NON	CD1-1
CE1-1	317	NO	SP	AL	OFF	L	BRG	L	SW	NON	OFF	OFF	OFF	H	ROM	R17	REA	NON	CE1-2
CE1-2	307	NO	SP	AL	OFF	H	BRG	H	NON	NON	ON	OFF	OFF	H	ROM	R0	REA	I	CE1-3
CE1-3	326	NO	NUL	AL	OFF	H	BRG	L	NON	NON	OFF	OFF	OFF	H	BAR	R0	REA	NON	H-2
CE2-1	315	NO	SP	A+B	OFF	L	+1	L	NON	NON	OFF	ON	OFF	H	ROM	R17	REA	NON	CE2-2
CE2-2	371	NO	SP	BL	OFF	H	BRG	H	NON	NON	OFF	OFF	OFF	H	ROM	R17	WRI	ON	CE1-1
CL-1	311	NO	NUL	ABAR	OFF	L	BRG	H	CON	207	ON	OFF	OFF	H	ROM	R0	WRI	I	CL-2
CL-2	375	NO	NUL	AL	OFF	H	BRG	L	NON	NON	OFF	OFF	OFF	H	BAR	R0	REA	NON	CL-3
CL-3	367	NO	SP	BL	OFF	H	BRG	H	NON	NON	OFF	OFF	OFF	H	ROM	R17	WRI	NON	H-2
CS-1	100	NO	SP	ZERO	OFF	H	BRG	H	IRC	NON	OFF	OFF	OFF	H	ROM	R0	REA	NON	CS-2
CS-2	322	NO	SP	AL	OFF	L	BRG	L	NON	NON	OFF	OFF	OFF	H	ROM	R17	REA	NON	CS-3
CS-3	321	NO	SP	BL	OFF	H	BRG	H	SRV	NON	OFF	OFF	OFF	H	ROM	R7	WRI	NON	BG-1
D0-1	101	NO	SP	AL	OFF	H	BRG	L	MOV	NON	OFF	OFF	OFF	H	IRD	R0	REA	NON	MB-0
D0-2	157	NO	SP	BL	OFF	H	BRG	H	UNY	NON	OFF	OFF	OFF	H	ROM	R11	WRI	NON	DO-17
D0-3	162	NO	SP	ABAR	ON	H	BRG	L	NMD	NON	OFF	ON	OFF	H	ROM	R10	REA	NON	D0-4
D0-3A	155	NO	SP	ABAR	ON	H	BRG	L	NMD	NON	OFF	ON	OFF	H	ROM	R10	REA	NON	D0-4
D0-4	332	NO	SP	BL	OFF	H	BRG	H	SRV	NON	OFF	OFF	OFF	H	IRD	R0	WRI	NON	BG-1
D1-1	103	YES	SP	AL	OFF	L	BRG	L	JOJ	NON	ON	OFF	OFF	H	IRD	R0	REA	IP	D1-2
D1-2	200	NO	NUL	AL	OFF	H	BRG	L	BYT	NON	OFF	OFF	OFF	H	BAR	R0	REA	NON	D1-3
D1-3	210	NO	SP	BL	OFF	H	BRG	H	UNY	NON	OFF	OFF	OFF	H	ROM	R11	WRI	NON	DO-18
D1-4	163	NO	SP	ABAR	ON	H	BRG	L	NMD	NON	OFF	ON	OFF	H	ROM	R10	REA	NON	D1-5

NAME	LOC	ABT	ALG	ALU	AUX	BAR	BLG	BRG	BUT	CON	CKO	CRI	FSH	PSW	SAM	SPA	SPF	TNS	NXT
D1-5	334	YES	SP	AL	OFF	H	BRG	H	NON	NON	ON	OFF	OFF	H	ROM	R0	REA	O	D1-6
D1-6	065	NO	SP	BL	OFF	H	BRG	H	NON	NON	OFF	OFF	OFF	H	ROM	R0	REA	NON	B2-2
D2-1	105	YES	SP	AL	OFF	L	BRG	H	NON	NON	OFF	OFF	OFF	H	IRD	R0	REA	IP	D2-2
D2-2	331	NO	SP	A+B	OFF	H	+1	L	NON	NON	OFF	ON	OFF	H	IRD	R0	REA	NON	D2-3
D2-3	341	NO	SP	BL	OFF	H	BRG	H	JOJ	NON	ON	OFF	OFF	H	IRD	R0	WRI	NON	D1-2
D3-1	107	NO	SP	AL	OFF	L	BRG	H	NON	NON	OFF	OFF	OFF	H	IRD	R0	REA	I	D3-2
D3-2	160	NO	SP	A+B	OFF	H	+1	L	NON	NON	OFF	ON	OFF	H	IRD	R0	REA	NON	D3-3
D3-3	070	NO	SP	BL	OFF	H	BRG	H	NON	NON	ON	OFF	OFF	H	IRD	R0	WRI	NON	D3-4
D3-4	071	NO	NUL	AL	OFF	H	BRG	L	NON	NON	OFF	OFF	OFF	H	BAR	R0	REA	NON	D3-5
D3-5	072	YES	SP	BL	OFF	L	BRG	H	JOJ	NON	ON	OFF	OFF	H	ROM	R0	REA	IP	D1-2
D4-1	111	YES	SP	A-B-1	OFF	L	+1	L	END	NON	OFF	OFF	OFF	H	IRD	R0	REA	IP	D2-3
D5-1	113	NO	SP	A-B-1	OFF	L	+1	L	END	NON	OFF	OFF	OFF	H	IRD	R0	REA	I	D3-3
D6-1	115	NO	SP	AL	OFF	L	BRG	H	NON	NON	OFF	OFF	OFF	H	ROM	R7	REA	I	D6-2
D6-2	075	NO	SP	A+B	OFF	H	+1	L	NON	NON	OFF	ON	OFF	H	ROM	R7	REA	NON	D6-3
D6-3	077	NO	SP	BL	OFF	H	BRG	H	NON	NON	ON	OFF	OFF	H	ROM	R7	WRI	NON	D6-4
D6-4	057	NO	NUL	AL	OFF	H	BRG	L	NON	NON	OFF	OFF	OFF	H	BAR	R0	REA	NON	D6-5
D6-5	300	YES	SP	A+B	OFF	L	BRG	L	JOJ	NON	ON	OFF	OFF	H	IRD	R0	REA	IP	D1-2
D7-1	117	NO	SP	AL	OFF	L	BRG	H	NON	NON	OFF	OFF	OFF	H	ROM	R7	REA	I	D7-2
D7-2	310	NO	SP	A+B	OFF	H	+1	L	NON	NON	OFF	ON	OFF	H	ROM	R7	REA	NON	D7-3
D7-3	104	NO	SP	BL	OFF	H	BRG	H	NON	NON	ON	OFF	OFF	H	ROM	R7	WRI	NON	D7-4
D7-4	320	NO	NUL	AL	OFF	H	BRG	L	NON	NON	OFF	OFF	OFF	H	BAR	R0	REA	NON	D7-5
D7-5	106	NO	SP	A+B	OFF	L	BRG	H	NON	NON	ON	OFF	OFF	H	IRD	R0	REA	I	D3-4
DB0-1	156	NO	SP	BL	OFF	H	SEX	L	UNY	NON	OFF	OFF	OFF	H	ROM	R11	WRI	NON	SB1-5
DB0-2	164	NO	SP	ABAR	ON	H	BRG	L	NMD	NON	OFF	ON	OFF	H	ROM	R10	REA	NON	DB0-3
DB0-3	304	NO	SPR	BL	OFF	H	BRG	H	SRV	NON	OFF	OFF	OFF	H	IRD	R0	WRI	NON	BG-1
DBE-1	110	NO	SP	AL	OFF	H	BRG	H	NON	NON	OFF	OFF	OFF	H	ROM	R0	REA	NON	H-1
DE-1	250	NO	SP	BL	OFF	H	SEX	L	UNY	NON	OFF	OFF	OFF	H	ROM	R11	WRI	NON	D1-4
DO-1	270	NO	SP	AL	OFF	H	BRG	SR	NON	NON	OFF	OFF	ON	H	ROM	R0	REA	NON	DO-2
DO-10	165	NO	SP	ABAR	ON	H	BRG	L	NMD	NON	OFF	ON	OFF	H	ROM	R10	REA	NON	DO-11
DO-11	342	NO	SP	AL	OFF	H	BRG	SL	NON	NON	OFF	OFF	ON	H	ROM	R0	REA	NON	DO-12
DO-12	135	NO	SP	AL	OFF	H	BRG	SL	NON	NON	OFF	OFF	ON	H	ROM	R0	REA	NON	DO-13
DO-13	136	NO	SP	AL	OFF	H	BRG	SL	NON	NON	OFF	OFF	ON	H	ROM	R0	REA	NON	DO-14
DO-14	137	NO	SP	AL	OFF	H	BRG	SL	NON	NON	OFF	OFF	ON	H	ROM	R0	REA	NON	DO-15
DO-15	140	NO	SP	AL	OFF	H	BRG	SL	NON	NON	OFF	OFF	ON	H	ROM	R0	REA	NON	DO-16
DO-16	141	NO	SP	AL	OFF	H	BRG	SL	NON	NON	OFF	OFF	ON	H	ROM	R0	REA	NON	DO-17
DO-17	142	NO	SP	AL	OFF	H	BRG	SL	NON	NON	OFF	OFF	ON	H	ROM	R0	REA	NON	DO-18
DO-18	143	YES	SP	AL	OFF	H	BRG	SL	NON	NON	ON	OFF	OFF	H	ROM	R0	REA	O	D1-6
DO-2	123	NO	SP	AL	OFF	H	BRG	SR	NON	NON	OFF	OFF	ON	H	ROM	R0	REA	NON	DO-3
DO-3	124	NO	SP	AL	OFF	H	BRG	SR	NON	NON	OFF	OFF	ON	H	ROM	R0	REA	NON	DO-4
DO-4	125	NO	SP	AL	OFF	H	BRG	SR	NON	NON	OFF	OFF	ON	H	ROM	R0	REA	NON	DO-5
DO-5	126	NO	SP	AL	OFF	H	BRG	SR	NON	NON	OFF	OFF	ON	H	ROM	R0	REA	NON	DO-6
DO-6	127	NO	SP	AL	OFF	H	BRG	SR	NON	NON	OFF	OFF	ON	H	ROM	R0	REA	NON	DO-7
DO-7	130	NO	SP	AL	OFF	H	BRG	SR	NON	NON	OFF	OFF	ON	H	ROM	R0	REA	NON	DO-8
DO-8	131	NO	SP	AL	OFF	H	BRG	SR	NON	NON	OFF	OFF	OFF	H	ROM	R0	REA	NON	DO-9

NAME	LOC	ABT	ALG	ALU	AUX	BAR	BLG	BRG	BUT	CON	CKO	CRI	FSW	PSW	SAM	SPA	SPF	TNS	NXT
DO=9	132	NO	SP	BL	OFF	H	SEX	L	UNV	NON	OFF	OFF	OFF	H	ROM	R11	WRI	NON	A145
ERT=1	010	NO	NUL	AL	OFF	H	BRC	L	CON	4	OFF	OFF	OFF	H	ROM	R0	WRI	NON	ET=2
ERT1A	046	NO	NUL	AL	OFF	H	BRC	L	CON	4	OFF	OFF	OFF	H	ROM	R0	WRI	NON	ET2=2
ERT1B	153	NO	NUL	AL	OFF	H	BRC	L	CON	4	OFF	OFF	OFF	H	ROM	R0	WRI	NON	ET=2
ET=1	011	NO	NUL	AL	OFF	H	BRC	L	CON	30	OFF	OFF	OFF	H	ROM	R0	WRI	NON	ET=2
ET=10	254	NO	SP	AL	OFF	L	BRC	H	IRC	NON	ON	OFF	OFF	H	ROM	R12	REA	I	ET=11
ET=11	255	NO	SP	AL	OFF	H	BRC	L	NON	NON	OFF	OFF	OFF	H	ROM	R7	WRI	NON	ET=12
ET=12	256	NO	SP	A+B	OFF	L	+1	L	NON	NON	ON	ON	OFF	H	ROM	R12	REA	I	ET=13
ET=13	257	NO	SP	AL	OFF	H	BRC	L	NON	NON	OFF	OFF	OFF	L	ROM	R0	REA	NON	B2=2
ET=2	245	NO	SP	BL	OFF	H	BRC	H	NON	NON	OFF	OFF	OFF	H	ROM	R12	WRI	NON	ET=3
ET=3	246	NO	SP	A-B=1	OFF	L	+1	L	ENO	NON	OFF	OFF	OFF	H	ROM	R6	REA	NON	ET=5
ET=5	247	NO	SP	BL	OFF	H	BRC	H	NON	NON	ON	OFF	OFF	H	ROM	R6	WRI	O	ET=6
ET=6	226	NO	PSW	AL	OFF	H	BRC	H	NON	NON	OFF	OFF	OFF	H	ROM	R0	REA	NON	ET=7
ET=7	251	NO	SP	A-B=1	OFF	L	+1	L	ENO	NON	OFF	OFF	OFF	H	ROM	R6	REA	NON	ET=8
ET=8	252	NO	SP	BL	OFF	H	BRC	H	NON	NON	ON	OFF	OFF	H	ROM	R6	WRI	O	ET=9
ET=9	253	NO	SP	AL	OFF	H	BRC	H	NON	NON	OFF	OFF	OFF	H	ROM	R7	REA	NON	ET=10
ET2=2	003	NO	SP	BL	OFF	H	BRC	L	NON	NON	OFF	OFF	OFF	H	ROM	R12	WRI	NON	ET2=3
ET2=3	004	NO	SP	A-B=1	OFF	L	+1	L	NON	NON	OFF	OFF	OFF	H	ROM	R6	REA	NON	ET2=5
ET2=5	036	NO	SP	BL	OFF	H	BRC	H	NON	NON	ON	OFF	OFF	H	ROM	R6	WRI	O	ET2=6
ET2=6	037	NO	PSW	AL	OFF	H	BRC	H	NON	NON	OFF	OFF	OFF	H	ROM	R0	REA	NON	ET2=7
ET2=7	051	NO	SP	A-B=1	OFF	L	+1	L	NON	NON	OFF	OFF	OFF	H	ROM	R6	REA	NON	ET=8
F=1	062	NO	SP	AL	OFF	L	BRC	H	NON	NON	OFF	OFF	OFF	H	ROM	R7	REA	I	F=2
F=2	053	NO	SP	A+B	OFF	H	+1	L	NON	NON	OFF	ON	OFF	H	ROM	R7	REA	NON	F=3
F=3	365	NO	SP	BL	OFF	H	BRC	H	NON	NON	ON	OFF	OFF	H	ROM	R7	WRI	NON	F=4
F=4	364	NO	NUL	AL	OFF	H	BRC	L	IRC	NON	OFF	OFF	OFF	H	BAR	R0	REA	NON	F=5
F=5	061	NO	SP	BL	OFF	H	SEX	L	IRD	NON	OFF	OFF	OFF	H	ROM	R0	REA	NON	RT=1
H=1	041	NO	SP	AL	OFF	H	BRC	L	NON	NON	OFF	OFF	OFF	H	ROM	R7	REA	NON	H=2
H=2	302	NO	SP	AL	OFF	L	BRC	H	SW	NON	OFF	OFF	OFF	H	ROM	R17	REA	NON	D6=5
INT=1	325	NO	SP	AL	OFF	H	BRC	H	SVS	NON	OFF	OFF	OFF	H	ROM	R12	WRI	NON	ET=3
IT=1	273	NO	NUL	AL	OFF	H	BRC	L	CON	20	OFF	OFF	OFF	H	ROM	R0	WRI	NON	ET=2
J1=1	204	NO	SP	AL	OFF	H	BRC	H	NON	NON	OFF	OFF	OFF	H	ROM	R0	REA	NON	J1=2
J1=2	260	NO	SP	BL	OFF	H	BRC	H	SRV	NON	OFF	OFF	OFF	H	ROM	R7	WRI	NON	BG=1
J2=1	212	NO	SP	AL	OFF	H	BRC	H	NON	NON	OFF	OFF	OFF	H	ROM	R0	REA	NON	J2=1A
J2=1A	261	NO	SP	BL	OFF	H	BRC	H	NON	NON	OFF	OFF	OFF	H	ROM	R11	WRI	NON	J2=2
J2=2	262	NO	SP	A-B=1	OFF	L	+1	L	ENO	NON	OFF	OFF	OFF	H	ROM	R6	REA	NON	J2=3
J2=3	214	NO	SP	BL	OFF	H	BRC	H	NON	NON	ON	OFF	OFF	H	ROM	R6	WRI	O	J2=4
J2=4	206	NO	SP	AL	OFF	H	BRC	H	NON	NON	OFF	OFF	OFF	H	IRS	R0	REA	NON	J2=5
J2=5	216	NO	SP	AL	OFF	H	BRC	L	NON	NON	OFF	OFF	OFF	H	ROM	R7	REA	NON	J2=6
J2=6	263	NO	SP	BL	OFF	H	BRC	H	NON	NON	OFF	OFF	OFF	H	IRS	R0	WRI	NON	J2=7
J2=7	264	NO	SP	AL	OFF	H	BRC	L	NON	NON	OFF	OFF	OFF	H	ROM	R11	REA	NON	J2=8
J2=8	265	NO	SP	BL	OFF	H	BRC	H	SRV	NON	OFF	OFF	OFF	H	ROM	R7	WRI	NON	BG=1
LC=1	042	NO	NUL	AL	OFF	H	BRC	L	CON	100	OFF	OFF	OFF	H	ROM	R0	WRI	NON	ET=2
MB=0	154	NO	SP	AL	OFF	H	BRC	H	NON	NON	ON	OFF	OFF	H	ROM	R0	REA	NON	MB=1
MB=1	240	NO	SP	ABAR	ON	H	BRC	L	NON	NON	OFF	ON	OFF	H	ROM	R10	REA	NON	MB=2

NAME	LOC	ABT	ALG	ALU	AUX	BAR	BLG	BRG	BUT	CON	CKO	CRI	FSW	PSW	SAM	SPA	SPF	TNS	NXT
MB=2	152	NO	SP	BL	OFF	H	SEX	H	SRV	NON	OFF	OFF	OFF	H	IRD	R0	WRI	NON	BG=1
PF=1	043	NO	NUL	AL	OFF	H	BRC	L	CON	24	OFF	OFF	OFF	H	ROM	R0	WRI	NON	ET=2
R1=1	005	NO	SP	AL	OFF	L	BRC	H	NON	NON	OFF	OFF	OFF	H	ROM	R6	REA	I	R1=2
R1=2	221	NO	SP	A+B	OFF	H	+1	L	NON	NON	OFF	ON	OFF	H	ROM	R6	REA	NON	R1=3
R1=3	222	NO	SP	BL	OFF	H	BRC	H	NON	NON	OFF	OFF	OFF	H	ROM	R6	WRI	NON	R1=4
R1=4	223	NO	SP	AL	OFF	H	BRC	L	NON	NON	OFF	OFF	OFF	H	IRD	R0	REA	NON	R1=5
R1=5	224	NO	SP	BL	OFF	H	BRC	H	NON	NON	ON	OFF	OFF	H	ROM	R7	WRI	NON	R1=6
R1=6	225	NO	NUL	AL	OFF	H	BRC	L	NON	NON	OFF	OFF	OFF	H	BAR	R0	REA	NON	D0=4
R2=1	227	NO	SP	AL	OFF	L	BRC	H	NON	NON	OFF	OFF	OFF	H	ROM	R6	REA	I	R2=2
R2=2	230	NO	SP	A+B	OFF	H	+1	L	NON	NON	OFF	ON	OFF	H	ROM	R6	REA	NON	R2=3
R2=3	231	NO	SP	BL	OFF	H	BRC	H	NON	NON	ON	OFF	OFF	H	ROM	R6	WRI	NON	R2=4
R2=4	232	NO	SP	AL	OFF	H	BRC	H	NON	NON	OFF	OFF	OFF	H	ROM	R7	WRI	NON	R2=6
R2=6	234	NO	SP	AL	OFF	L	BRC	H	NON	NON	OFF	OFF	OFF	H	ROM	R6	REA	I	R2=7
R2=7	235	NO	SP	A+B	OFF	H	+1	L	NON	NON	OFF	ON	OFF	H	ROM	R6	REA	NON	R2=8
R2=8	236	NO	SP	BL	OFF	H	BRC	H	NON	NON	ON	OFF	OFF	H	ROM	R6	WRI	NON	R2=9
R2=9	237	NO	NUL	AL	OFF	H	BRC	H	NON	NON	OFF	OFF	OFF	L	ROM	R0	REA	NON	B2=2
RS=1	000	NO	NUL	AL	OFF	L	BRC	H	CON	24	OFF	OFF	OFF	H	ROM	R0	WRI	I	RS=1A
RS=1A	241	NO	SP	AL	OFF	H	BRC	H	NON	NON	ON	OFF	OFF	H	ROM	R0	REA	NON	RS=2
RS=2	347	NO	SP	AL	OFF	H	BRC	H	NON	NON	OFF	OFF	OFF	H	ROM	R7	WRI	NON	RS=3
RS=3	074	NO	NUL	A+B	OFF	L	+1	H	CON	24	ON	ON	OFF	H	ROM	R0	WRI	I	RS=4
RS=4	351	NO	SP	AL	OFF	H	BRC	H	NON	NON	OFF	OFF	OFF	L	ROM	R0	REA	NON	B2=2
RST=1	357	NO	SP	AL	OFF	H	BRC	H	INI	NON	ON	OFF	OFF	H	ROM	R0	REA	NON	B2=2
RT=1	001	NO	NUL	AL	OFF	H	BRC	L	CON	10	OFF	OFF	OFF	H	ROM	R0	WRI	NON	ET=2
S0=1	201	NO	SP	AL	OFF	H	BRC	L	BYT	NON	OFF	OFF	OFF	H	IRS	R0	REA	NON	S0=2
S0=2	007	NO	SP	BL	OFF	H	BRC	H	DST	NON	OFF	OFF	OFF	H	ROM	R10	WRI	NON	RT=1
S1=1	203	YES	SP	AL	OFF	L	BRC	H	NON	NON	ON	OFF	OFF	H	IRS	R0	REA	I	S1=2
S1=2	244	NO	NUL	AL	OFF	H	BRC	L	BYT	NON	OFF	OFF	OFF	H	BAR	R0	REA	NON	S0=2
S2=1	205	YES	SP	AL	OFF	L	BRC	H	NON	NON	OFF	OFF	OFF	H	IRS	R0	REA	I	S2=2
S2=2	301	NO	SP	A+B	OFF	H	+1	L	NON	NON	OFF	ON	OFF	H	IRS	R0	REA	NON	S2=3
S2=3	014	NO	SP	BL	OFF	H	BRC	H	NON	NON	ON	OFF	OFF	H	IRS	R0	WRI	NON	S1=2
S3=1	207	NO	SP	AL	OFF	L	BRC	H	NON	NON	OFF	OFF	OFF	H	IRS	R0	REA	I	S3=2
S3=2	016	NO	SP	A+B	OFF	H	+1	L	NON	NON	OFF	ON	OFF	H	IRS	R0	REA	NON	S3=3
S3=3	017	NO	SP	BL	OFF	H	BRC	H	NON	NON	ON	OFF	OFF	H	IRS	R0	WRI	NON	S3=4
S3=4	134	NO	NUL	AL	OFF	H	BRC	L	NON	NON	OFF	OFF	OFF	H	BAR	R0	REA	NON	S3=5
S3=5	274	YES	SP	BL	OFF	L	BRC	H	NON	NON	ON	OFF	OFF	H	ROM	R0	REA	I	S1=2
S4=1	211	YES	SP	A-B=1	OFF	L	+1	L	ENO	NON	OFF	OFF	OFF	H	IRS	R0	REA	I	S2=3
S5=1	213	NO	SP	A-B=1	OFF	L	+1	L	ENO	NON	OFF	OFF	OFF	H	IRS	R0	REA	I	S3=3
S6=1	215	NO	SP	AL	OFF	L	BRC	H	NON	NON	OFF	OFF	OFF	H	ROM	R7	REA	I	S6=2
S6=2	025	NO	SP	A+B	OFF	H	+1	L	NON	NON	OFF	ON	OFF	H	ROM	R7	REA	NON	S6=3
S6=3	026	NO	SP	BL	OFF	H	BRC	H	NON	NON	ON	OFF	OFF	H	ROM	R7	WRI	NON	S6=4
S6=4	027	NO	NUL	AL	OFF	H	BRC	L	NON	NON	OFF	OFF	OFF	H	BAR	R0	REA	NON	S6=5
S6=5	030	YES	SP	A+B	OFF	L	BRC	H	NON	NON	ON	OFF	OFF	H	IRS	R0	REA	I	S1=2
S7=1	217	NO	SP	AL	OFF	L	BRC	H	NON	NON	OFF	OFF	OFF	H	ROM	R7	REA	I	S7=2
S7=2	032	NO	SP	A+B	OFF	H	+1	L	NON	NON	OFF	ON	OFF	H	ROM	R7	REA	NON	S7=3

NAME	LOC	ABT	ALG	ALU	AUX	BAR	BLG	BRG	BUT	CON	CKO	CRI	FSW	PSW	SAM	SPA	SPF	TNS	NXT
S7-3	033	NO	SP	BL	OFF	W	BRG	W	NON	NON	ON	OFF	OFF	W	ROM	R7	WRI	NON	S7-4
S7-4	034	NO	NUL	AL	OFF	W	BRG	L	NON	NON	OFF	OFF	OFF	W	BAR	R0	REA	NON	S7-5
S7-5	035	NO	SP	A+B	OFF	L	BRG	W	NON	NON	ON	OFF	OFF	W	IRS	R0	REA	I	S3-4
SB1-1	166	NO	SP	ASR	OFF	W	BRG	SL	NON	NON	OFF	OFF	ON	W	ROM	R0	REA	NON	SB1-2
SB1-2	172	NO	SP	ASR	OFF	W	BRG	SL	NON	NON	OFF	OFF	ON	W	ROM	R0	REA	NON	SB1-3
SB1-3	173	NO	SP	ASR	OFF	W	BRG	SL	NON	NON	OFF	OFF	ON	W	ROM	R0	REA	NON	SB1-4
SB1-4	174	NO	SP	ASR	OFF	W	BRG	SL	NON	NON	OFF	OFF	ON	W	ROM	R0	REA	NON	SB1-5
SB1-5	144	NO	SP	ASR	OFF	W	BRG	SL	NON	NON	OFF	OFF	ON	W	ROM	R0	REA	NON	SB1-6
SB1-6	176	NO	SP	ASR	OFF	W	BRG	SL	NON	NON	OFF	OFF	ON	W	ROM	R0	REA	NON	SB1-7
SB1-7	177	NO	SP	ASR	OFF	W	BRG	SL	NON	NON	OFF	OFF	ON	W	ROM	R0	REA	NON	SB1-8
SB1-8	006	NO	SP	ASR	OFF	W	BRG	SL	NON	NON	OFF	OFF	OFF	W	ROM	R0	REA	NON	D0-3A
SB2-1	167	NO	SP	ASR	OFF	W	BRG	SL	NON	NON	OFF	OFF	ON	W	ROM	R0	REA	NON	SB2-2
SB2-2	012	NO	SP	ASR	OFF	W	BRG	SL	NON	NON	OFF	OFF	ON	W	ROM	R0	REA	NON	SB2-3
SB2-3	220	NO	SP	ASR	OFF	W	BRG	SL	NON	NON	OFF	OFF	ON	W	ROM	R0	REA	NON	SB2-4
SB2-4	022	NO	SP	ASR	OFF	W	BRG	SL	NON	NON	OFF	OFF	ON	W	ROM	R0	REA	NON	SB2-5
SB2-5	023	NO	SP	ASR	OFF	W	BRG	SL	NON	NON	OFF	OFF	ON	W	ROM	R0	REA	NON	SB2-6
SB2-6	024	NO	SP	ASR	OFF	W	BRG	SL	NON	NON	OFF	OFF	ON	W	ROM	R0	REA	NON	SB2-7
SB2-7	031	NO	SP	ASR	OFF	W	BRG	SL	NON	NON	OFF	OFF	ON	W	ROM	R0	REA	NON	SB2-8
SB2-8	330	NO	SP	ASR	OFF	W	BRG	SL	NON	NON	OFF	OFF	OFF	W	ROM	R0	REA	NON	D1-4
SBE-1	047	NO	SP	BL	OFF	W	SEX	W	DST	NON	OFF	OFF	OFF	W	ROM	R10	WRI	NON	RT-1
SB0-1	067	NO	SP	AL	OFF	W	BRG	SR	NON	NON	OFF	OFF	ON	W	ROM	R0	REA	NON	SB0-2
SB0-2	346	NO	SP	AL	OFF	W	BRG	SR	NON	NON	OFF	OFF	ON	W	ROM	R0	REA	NON	SB0-3
SB0-3	324	NO	SP	AL	OFF	W	BRG	SR	NON	NON	OFF	OFF	ON	W	ROM	R0	REA	NON	SB0-4
SB0-4	340	NO	SP	AL	OFF	W	BRG	SR	NON	NON	OFF	OFF	ON	W	ROM	R0	REA	NON	SB0-5
SB0-5	361	NO	SP	AL	OFF	W	BRG	SR	NON	NON	OFF	OFF	ON	W	ROM	R0	REA	NON	SB0-6
SB0-6	050	NO	SP	AL	OFF	W	BRG	SR	NON	NON	OFF	OFF	ON	W	ROM	R0	REA	NON	SB0-7
SB0-7	020	NO	SP	AL	OFF	W	BRG	SR	NON	NON	OFF	OFF	ON	W	ROM	R0	REA	NON	SB0-8
SB0-8	052	NO	SP	AL	OFF	W	BRG	SR	NON	NON	OFF	OFF	OFF	W	ROM	R0	REA	NON	SBE-1
SG-1	116	NO	PSW	AORB	OFF	W	BRG	W	SRV	NON	OFF	OFF	OFF	L	ROM	R0	REA	NON	BG-1
T-1	021	NO	NUL	AL	OFF	W	BRG	L	CON	34	OFF	OFF	OFF	W	ROM	R0	WRI	NON	ET-2
U1-1	352	NO	SP	BL	OFF	W	BRG	W	NON	NON	ON	OFF	OFF	W	ROM	R10	WRI	NON	D0-3
U2-1	353	NO	SP	BL	OFF	W	BRG	W	NON	NON	ON	OFF	OFF	W	ROM	R10	WRI	NON	D1-4
U3-1	354	NO	SP	BL	OFF	W	BRG	W	NON	NON	ON	OFF	OFF	W	ROM	R10	WRI	NON	DB0-2
U4-1	355	NO	SP	BL	OFF	W	BRG	W	NON	NON	ON	OFF	OFF	W	ROM	R10	WRI	NON	D0-10
U5-1	373	NO	SP	BL	OFF	W	BRG	W	NON	NON	ON	OFF	OFF	W	ROM	R10	WRI	NON	D1-4
URTR	064	NO	NUL	AL	OFF	W	BRG	L	CON	60	OFF	OFF	OFF	W	ROM	R0	WRI	NON	ET-2
URTX	060	NO	NUL	AL	OFF	W	BRG	L	CON	64	OFF	OFF	OFF	W	ROM	R0	WRI	NON	ET-2
W-1	063	NO	SP	AL	OFF	W	BRG	W	SRV	NON	OFF	OFF	OFF	W	ROM	R0	REA	NON	BG-1

PAGE REVISION CONTROL SHEET

SH NO.	PAGE REVISIONS																			REMARKS
1	A	B	C	D																
2	A	A	A	A																
3	A	B	B	B																
4	A	A	B	B																
5	A	A	A	B																
6	A	A	A	B																
7	A	A	A	A																
ECO NO.	00002	KD11B 00003	KD11B 00004	KD11B-00005																
ETCH REV.																				
ENG.	BA	MT	MT	DR																
DATE	8-21-72	9-24-72	10-30-72	8-15-73																

FIRST USED ON OPTION/MODEL

KD11-B

DRN. M. Towne	DATE 8-21-72	digital EQUIPMENT CORPORATION MAYNARD MASSACHUSETTS	
CHK'D. J. McCullough	DATE 8-21-72		
ENG. B. ARMSTRONG	DATE 8-29-72	TITLE MICROPROGRAM BINARY LISTING	
PROJ. ENG. B. ARMSTRONG	DATE 8-29-72		
PROD.	DATE		
NEXT HIGHER ASSY. B-DD-KD11-B		SIZE K	CODE MP	NUMBER KD11-B-3	REV. D
SCALE —			
SHEET 1 OF 7		DIST.	

NAM	LOC	NXT		ALU	CRI	FSH	AUX	PSW	SSP1	SSP3	DIP	SMP0	SPM0	SMB1	BBT	BAR	BTP	BPF	SP2	CKB0	ATBT	NS	AL G	BR G	BUT
A145	145	0000	0000	0000	0	0	1	0	0	0	0	0	0	0	0	0	0	0	0	0	0	00	00	00	0101
B-1	015	1001	1000	1100	0	0	1	1	1	0	1	1	0	1	0	0	1	0	0	0	0	00	00	00	0101
B-2	147	1001	1001	0110	0	0	1	1	1	0	1	1	0	1	1	1	1	1	0	1	1	11	01	11	1111
B-3	146	1101	1111	0101	1	0	1	1	1	0	1	1	1	1	1	1	1	1	1	1	1	11	11	11	1111
B2-2	305	1101	1111	0000	1	0	1	1	1	0	0	1	1	0	1	1	1	1	0	1	1	11	00	11	1100
B2-2A	333	1101	1111	0000	1	0	1	1	1	0	0	1	1	0	1	1	1	1	0	1	1	11	00	11	1100
B2-2B	335	1101	1111	0000	1	0	1	1	1	0	0	1	1	0	1	1	1	1	0	1	1	11	00	11	1100
B2-2C	343	1101	1111	0000	1	0	1	1	1	0	0	1	1	0	1	1	1	1	0	1	1	11	00	11	1100
B2-2D	013	1101	1111	0000	1	0	1	1	1	0	0	1	1	0	1	1	1	1	0	1	1	11	00	11	1100
BG-1	040	0011	1010	0000	1	0	1	1	1	0	0	1	1	0	1	1	1	1	0	1	1	11	00	00	0001
BT-1	045	0101	1010	0000	1	0	1	1	1	1	0	1	1	0	1	1	1	0	0	1	1	11	10	11	1101
CC-1	112	1101	1111	0010	1	0	1	1	0	0	0	1	1	0	1	1	1	1	0	1	1	11	00	00	1100
CCM-1	151	0001	0111	0001	1	0	1	1	1	0	0	1	1	1	1	1	1	1	0	0	1	11	10	11	1101
CCM-2	350	1011	0101	0000	1	0	1	1	1	0	0	1	1	0	1	1	1	1	0	1	1	11	11	00	1001
CCS-1	316	0100	0001	0000	1	0	1	1	1	1	0	1	1	1	1	1	1	1	1	1	1	11	11	11	1111
CCS-2	276	0100	0111	0000	1	0	1	1	1	0	0	1	1	0	1	1	1	1	0	1	1	11	00	01	0110
CCS-3	272	1100	1101	0011	1	0	1	1	1	0	0	1	1	0	1	1	1	1	0	1	1	11	00	00	0000
CD1-1	313	0011	1100	0000	1	0	1	1	1	1	1	1	1	1	1	1	1	1	1	1	1	11	11	01	0110
CD1-2	303	0000	0011	1111	1	0	1	1	1	0	0	1	1	0	1	1	0	1	0	0	1	10	10	00	1101
CD1-3	374	0011	0011	0000	1	0	1	1	1	0	0	1	0	0	0	1	1	1	1	0	1	11	10	11	1111
CD1-4	314	0000	0101	0000	1	0	1	1	1	1	1	1	1	1	1	1	0	1	1	1	0	01	11	00	1111
CD1-5	372	0011	1101	0101	1	0	1	1	1	0	0	1	0	0	0	1	1	1	1	0	1	11	11	00	1111
CD2-1	312	0010	0000	0110	0	1	1	1	1	1	1	1	1	1	1	0	1	1	1	1	1	11	11	11	1111
CD2-2	337	0011	0100	0101	1	0	1	1	1	1	1	1	1	1	1	1	1	1	0	1	1	11	11	00	1111
CE1-1	317	0011	1000	0000	1	0	1	1	1	1	1	1	1	1	1	1	0	1	1	1	1	11	11	11	0110
CE1-2	307	0010	1001	0000	1	0	1	1	1	0	0	1	1	0	1	1	1	1	1	0	0	10	11	00	1111
CE1-3	326	0011	1101	0000	1	0	1	1	1	0	0	1	0	0	0	1	1	1	1	0	1	11	10	11	1111
CE2-1	315	0000	0110	0110	0	1	1	1	1	1	1	1	1	1	1	0	0	1	1	1	1	11	11	11	1111
CE2-2	371	0011	0000	0101	1	0	1	1	1	1	1	1	1	1	1	1	1	1	0	1	1	11	11	00	1111
CL-1	311	0000	0010	1111	1	0	1	1	1	0	0	1	1	0	1	1	0	1	0	0	0	10	10	00	1101
CL-2	375	0000	1000	0000	1	0	1	1	1	0	0	1	0	0	0	1	1	1	1	0	1	11	10	11	1111
CL-3	367	0011	1101	0101	1	0	1	1	1	1	1	1	1	1	1	1	1	1	0	1	1	11	11	00	1111
CS-1	100	0010	1101	0011	1	0	1	1	1	0	0	1	1	0	1	1	1	1	1	0	1	11	11	00	0000
CS-2	322	0010	1110	0000	1	0	1	1	1	1	1	1	1	1	1	1	0	1	1	1	1	11	11	11	1111
CS-3	321	1101	1111	0101	1	0	1	1	1	1	0	1	1	1	1	1	1	1	0	1	1	11	11	00	1100
D0-1	101	1001	0011	0000	1	0	1	1	1	0	0	1	0	0	1	1	1	1	0	1	1	11	11	11	0101
D0-2	157	1001	1101	0101	1	0	1	1	1	0	1	1	1	1	1	1	1	0	0	1	1	11	11	00	1010
D0-3	162	0010	0101	1111	1	1	1	0	1	0	1	1	1	0	1	1	1	1	0	1	1	11	11	11	0010
D0-3A	155	0010	0101	1111	1	1	1	0	1	0	1	1	1	0	1	1	1	1	0	1	1	11	11	11	0010
D0-4	332	1101	1111	0101	1	0	1	1	1	0	0	1	0	0	1	1	1	0	0	1	1	11	11	00	1100

NAM	LOC	NXT		ALU	CRI	FSH	AUX	PSW	SSP1	SSP3	DIP	SMP0	SPM0	SMB1	BBT	BAR	BTP	BPF	SP2	CKB0	ATBT	NS	AL G	BR G	BUT
D1-1	103	0111	1111	0000	1	0	1	1	1	0	0	0	0	1	1	0	1	1	0	0	0	10	11	11	1011
D1-2	200	0111	0111	0000	1	0	1	1	1	0	0	1	0	0	0	1	1	1	1	0	1	11	10	11	0011
D1-3	210	1001	1100	0101	1	0	1	1	1	0	1	1	1	1	1	1	1	1	0	0	1	11	11	00	1010
D1-4	163	0010	0011	1111	1	1	1	0	1	0	1	1	1	0	1	1	1	1	1	0	1	11	11	11	0010
D1-5	334	1100	1010	0000	1	0	1	1	1	0	0	1	1	0	1	1	1	1	1	0	0	01	11	00	1111
D1-6	065	0011	1010	0101	1	0	1	1	1	0	0	1	1	0	1	1	1	1	1	0	1	11	11	00	1111
D2-1	105	0010	0110	0000	1	0	1	1	1	0	0	0	0	0	1	1	0	1	1	0	1	10	11	00	1111
D2-2	331	0001	1110	0110	0	1	1	1	1	0	0	1	0	0	1	0	1	1	1	0	1	11	11	11	1111
D2-3	341	0111	1111	0101	1	0	1	1	1	0	0	1	0	0	1	1	1	1	0	0	0	11	11	00	1011
D3-1	107	1000	1111	0000	1	0	1	1	1	0	0	1	0	0	1	1	0	1	1	0	1	10	11	00	1111
D3-2	160	1100	0111	0110	0	1	1	1	1	0	0	1	0	0	1	0	1	1	1	0	1	11	11	11	1111
D3-3	070	1100	0110	0101	1	0	1	1	1	0	0	1	0	0	1	1	1	1	0	0	0	11	11	00	1111
D3-4	071	1100	0101	0000	1	0	1	1	1	0	0	1	0	0	0	1	1	1	1	0	1	11	10	11	1111
D3-5	072	0111	1111	0101	1	0	1	1	1	0	0	0	1	0	1	1	0	1	1	0	0	10	11	00	1011
D4-1	111	0001	1110	1001	0	0	1	1	1	0	0	0	0	1	0	0	0	1	1	0	1	10	11	11	0100
D5-1	113	1100	0111	1001	0	0	1	1	1	0	0	1	0	0	1	0	0	1	1	0	1	10	11	11	0100
D6-1	115	1100	0010	0000	1	0	1	1	1	1	0	1	1	1	1	1	0	1	1	1	1	10	11	00	1111
D6-2	075	1100	0000	0110	0	1	1	1	1	1	0	1	1	1	1	0	1	1	1	1	1	11	11	11	1111
D6-3	077	1101	0000	0101	1	0	1	1	1	1	0	1	1	1	1	1	1	1	0	1	0	11	11	00	1111
D6-4	057	0011	1111	0000	1	0	1	1	1	0	0	1	0	0	0	1	1	1	1	0	1	11	10	11	1111
D6-5	300	0111	1111	0110	0	0	1	1	1	0	0	0	0	0	1	1	0	1	1	0	0	10	11	11	1011
D7-1	117	0011	0111	0000	1	0	1	1	1	1	0	1	1	1	1	1	0	1	1	1	1	10	11	00	1111
D7-2	310	1011	1011	0110	0	1	1	1	1	1	0	1	1	1	1	0	1	1	1	1	1	11	11	11	1111
D7-3	104	0010	1111	0101	1	0	1	1	1	1	0	1	1	1	1	1	1	1	0	1	0	11	11	00	1111
D7-4	320	1011	1001	0000	1	0	1	1	1	0	0	1	0	0	0	1	1	1	1	0	1	11	10	11	1111
D7-5	106	1100	0110	0110	0	0	1	1	1	0	0	1	0	0	1	1	0	1	1	0	0	10	11	00	1111
DB0-1	156	1001	1011	0101	1	0	1	1	1	0	1	1	1	1	1	1	1	0	0	0	1	11	11	11	1010
DB0-2	164	0011	1011	1111	1	1	1	0	1	0	1	1	1	0	1	1	1	1	1	0	1	11	11	11	0010
DB0-3	304	1101	1111	0101	1	0	1	1	1	0	0	1	0	0	1	1	1	1	0	0	1	11	01	00	1100
DBE-1	110	1101	1110	0000	1	0	1	1	1	0	0	1	1	0	1	1	1	1	1	0	1	11	11	00	1111
DE-1	250	1000	1100	0101	1	0	1	1	1	0	1	1	1	1	1	1	1	0	0	0	1	11	11	11	1010
DD-1	270	1010	1100	0000	1	0	0	1	1	0	0	1	1	0	1	1	1	1	1	0	1	11	11	10	1111
DD-10	165	0001	1101	1111	1	1	1	0	1	0	1	1	1	0	1	1	1	1	1	0	1	11	11	11	0010
DD-11	342	1010	0010	0000	1	0	0	1	1	0	0	1	1	0	1	1	1	1	1	0	1	11	11	01	1111
DD-12	135	1010	0001	0000	1	0	0	1	1	0	0	1	1	0	1	1	1	1	1	0	1	11	11	01	1111
DD-13	136	1010	0000	0000	1	0	0	1	1	0	0	1	1	0	1	1	1	1	1	0	1	11	11	01	1111
DD-14	137	1001	1111	0000	1	0	0	1	1	0	0	1	1	0	1	1	1	1	1	0	1	11	11	01	1111
DD-15	140	1001	1110	0000	1	0	0	1	1	0	0	1	1	0	1	1	1	1	1	0	1	11	11	01	1111
DD-16	141	1001	1101	0000	1	0	0	1	1	0	0	1	1	0	1	1	1	1	1	0	1	11	11	01	1111
DD-17	142	1001	1100	0000	1	0	0	1	1	0	0	1	1	0	1	1	1	1	1	0	1	11	11	01	1111

NAM	LOC	NXT	ALU	CRI	FSH	AUX	PSW	SP1	SP3	DIP	SMO	SP0	SM1	BT	BAR	BTP	SP2	SP	CKO	ABT	TNS	ALG	BRG	BUT
DO-10	143	1100	1010	0020	1	0	1	1	1	0	0	1	1	0	1	1	1	0	0	0	01	11	01	1111
DO-2	123	1010	1011	0000	1	0	0	1	1	0	0	1	1	0	1	1	1	0	1	1	11	11	10	1111
DO-3	124	1010	1010	0020	1	0	0	1	1	0	0	1	1	0	1	1	1	0	1	1	11	11	10	1111
DO-4	125	1010	1001	0000	1	0	0	1	1	0	0	1	1	0	1	1	1	0	1	1	11	11	10	1111
DO-5	126	1010	1000	0020	1	0	0	1	1	0	0	1	1	0	1	1	1	0	1	1	11	11	10	1111
DO-6	127	1010	0111	0000	1	0	0	1	1	0	0	1	1	0	1	1	1	0	1	1	11	11	10	1111
DO-7	130	1010	0110	0000	1	0	0	1	1	0	0	1	1	0	1	1	1	0	1	1	11	11	10	1111
DO-8	131	1010	0101	0000	1	0	1	1	1	0	0	1	1	0	1	1	1	0	1	1	11	11	10	1111
DO-9	132	1001	1010	0101	1	0	1	1	1	0	1	1	1	1	1	1	0	0	0	1	11	11	11	1010
ERT-1	010	0101	1010	0000	1	0	1	1	1	1	0	1	1	0	1	1	1	0	1	1	11	10	11	1101
ERT1A	046	1111	1100	0000	1	0	1	1	1	1	0	1	1	0	1	1	1	0	1	1	11	10	11	1101
ERT1B	153	0101	1010	0000	1	0	1	1	1	1	0	1	1	0	1	1	1	0	1	1	11	10	11	1101
ET-1	011	0101	1010	0000	1	0	1	1	1	1	0	1	1	0	1	1	1	1	0	1	11	10	11	1101
ET-10	254	0101	0010	0020	1	0	1	1	1	1	1	1	1	0	1	1	0	1	1	0	10	11	00	0000
ET-11	255	0101	0001	0020	1	0	1	1	1	1	0	1	1	1	1	1	1	0	1	1	11	11	11	1111
ET-12	256	0101	0000	0110	0	1	1	1	1	1	1	1	1	0	1	0	1	0	0	1	10	11	11	1111
ET-13	257	0011	1010	0000	1	0	1	1	0	0	0	1	1	0	1	1	1	1	0	1	11	11	11	1111
ET-2	245	0101	1001	0101	1	0	1	1	1	1	1	1	1	0	1	1	1	0	0	1	11	11	00	1111
ET-3	246	0101	1000	1001	0	0	1	1	1	1	0	1	1	0	1	0	0	1	1	1	11	11	11	0100
ET-5	247	0110	1001	0101	1	0	1	1	1	1	0	1	1	0	1	1	1	0	1	0	01	11	00	1111
ET-6	226	0101	0110	0000	1	0	1	1	1	0	0	1	1	0	1	1	1	1	0	1	11	00	00	1111
ET-7	251	0101	0101	1001	0	0	1	1	1	1	0	1	1	0	1	0	0	1	1	1	11	11	11	0100
ET-8	252	0101	0100	0101	1	0	1	1	1	1	0	1	1	0	1	1	1	0	1	0	01	11	00	1111
ET-9	253	0101	0011	0000	1	0	1	1	1	1	0	1	1	1	1	1	1	1	1	1	11	11	00	1111
ET2-2	003	1111	1011	0101	1	0	1	1	1	1	1	1	1	0	1	1	1	0	0	1	11	11	11	1111
ET2-3	004	1110	0001	1001	0	0	1	1	1	1	0	1	1	0	1	0	0	1	1	1	11	11	11	1111
ET2-5	036	1110	0000	0101	1	0	1	1	1	1	0	1	1	0	1	1	1	0	1	0	01	11	00	1111
ET2-6	037	1101	0110	0000	1	0	1	1	1	0	0	1	1	0	1	1	1	1	0	1	11	00	00	1111
ET2-7	051	0101	0101	1001	0	0	1	1	1	1	0	1	1	0	1	0	0	1	1	1	11	11	11	1111
F-1	062	1101	0100	0000	1	0	1	1	1	1	0	1	1	1	1	1	0	1	1	1	10	11	00	1111
F-2	053	0000	1010	0110	0	1	1	1	1	1	0	1	1	1	1	0	1	1	1	1	11	11	11	1111
F-3	365	0000	1011	0101	1	0	1	1	1	1	0	1	1	1	1	1	1	0	1	0	1	11	00	1111
F-4	364	1100	1110	0000	1	0	1	1	1	0	0	1	0	0	0	1	1	1	0	1	1	10	11	0000
F-5	061	1111	1110	0101	1	0	1	1	1	0	0	1	1	0	1	1	1	0	1	1	11	11	11	0111
H-1	041	0011	1101	0000	1	0	1	1	1	1	0	1	1	1	1	1	1	1	1	1	11	11	11	1111
H-2	302	0011	1111	0000	1	0	1	1	1	1	1	1	1	1	1	1	0	1	1	1	11	11	00	0110
INT-1	325	0101	1001	0020	1	0	1	1	1	1	1	1	1	0	1	1	1	1	0	1	11	11	00	1000
IT-1	273	0101	1010	0020	1	0	1	1	1	0	0	1	1	0	1	1	1	1	1	1	11	10	11	1101
J1-1	204	0100	1111	0020	1	0	1	1	1	0	0	1	1	0	1	1	1	1	0	1	11	11	00	1111
J1-2	260	1101	1111	0101	1	0	1	1	1	1	0	1	1	1	1	1	1	0	1	1	11	11	00	1100

NAM	LOC	NXT	ALU	CRI	FSH	AUX	PSW	SP1	SP3	DIP	SMO	SP0	SM1	BT	BAR	BTP	SP2	SP	CKO	ABT	TNS	ALG	BRG	BUT
J2-1	212	0100	1110	0000	1	0	1	1	1	0	0	1	1	0	1	1	1	0	1	1	11	11	00	1111
J2-1A	261	0100	1101	0101	1	0	1	1	1	0	1	1	1	1	1	1	0	0	1	1	11	11	00	1111
J2-2	262	0111	0011	1001	0	0	1	1	1	1	0	1	1	0	1	0	0	1	1	1	11	11	11	0100
J2-3	214	0111	1001	0101	1	0	1	1	1	1	0	1	1	0	1	1	1	0	1	0	01	11	00	1111
J2-4	206	0111	0001	0000	1	0	1	1	1	0	0	1	1	0	0	1	1	1	1	0	1	1	11	11	00	1111
J2-5	216	0100	1100	0000	1	0	1	1	1	1	0	1	1	1	1	1	1	1	1	1	1	1	11	11	11	1111
J2-6	263	0100	1011	0101	1	0	1	1	1	0	0	1	1	0	0	1	1	1	0	0	1	1	11	11	00	1111
J2-7	264	0100	1010	0000	1	0	1	1	1	0	1	1	1	1	1	1	1	1	0	1	1	11	11	11	1111
J2-8	265	1101	1111	0101	1	0	1	1	1	1	0	1	1	1	1	1	1	0	1	1	1	11	11	00	1100
LC-1	042	0101	1010	0000	1	0	1	1	1	0	1	1	1	1	1	1	1	1	0	1	1	11	10	11	1101
MB-0	154	0101	1111	0000	1	0	1	1	1	0	0	1	1	0	1	1	1	1	0	0	1	11	11	00	1111
MB-1	240	1001	0101	1111	1	1	1	0	1	0	1	1	1	0	1	1	1	1	0	1	1	11	11	11	1111
MB-2	152	1101	1111	0101	1	0	1	1	1	0	0	1	0	0	1	1	1	0	0	0	1	1	11	00	1100
PF-1	243	0101	1010	0000	1	0	1	1	1	0	1	1	1	0	1	1	1	1	0	1	1	11	10	11	1101
R1-1	205	0110	1110	0000	1	0	1	1	1	1	0	1	1	0	1	1	0	1	1	1	1	10	11	00	1111
R1-2	221	0110	1101	0110	0	1	1	1	1	1	0	1	1	0	1	0	1	1	1	1	1	11	11	11	1111
R1-3	222	0110	1100	0101	1	0	1	1	1	1	0	1	1	0	1	1	1	1	0	1	1	11	11	00	1111
R1-4	223	0110	1011	0000	1	0	1	1	1	0	0	1	0	0	1	1	1	1	0	1	1	11	11	11	1111
R1-5	224	0110	1010	0101	1	0	1	1	1	1	0	1	1	1	1	1	1	1	0	1	0	1	11	00	1111
R1-6	225	0010	0101	0000	1	0	1	1	1	0	0	1	0	0	0	1	1	1	1	0	1	1	11	10	11	1111
R2-1	227	0110	0111	0000	1	0	1	1	1	1	0	1	1	0	1	1	0	1	1	1	1	1	10	11	00	1111
R2-2	230	0110	0110	0110	0	1	1	1	1	1	0	1	1	0	1	0	1	1	1	1	1	11	11	11	11	1111
R2-3	231	0110	0101	0101	1	0	1	1	1	1	0	1	1	0	1	1	1	1	0	1	0	1	11	11	00	1111
R2-4	232	0110	0011	0000	1	0	1	1	1	1	0	1	1	1	1	1	1	1	0	1	1	1	11	11	00	1111
R2-6	234	0110	0010	0000	1	0	1	1	1	1	0	1	1	0	1	1	0	1	1	1	1	1	10	11	00	1111
R2-7	235	0110	0001	0110	0	1	1	1	1	1	0	1	1	0	1	0	1	1	1	1	1	11	11	11	11	1111
R2-8	236	0110	0000	0101	1	0	1	1	1	1	0	1	1	0	1	1	1	1	0	1	0	1	11	11	00	1111
R2-9	237	0011	1010	0000	1	0	1	1	0	0	0	1	1	0	1	1	1	1	0	1	1	1	11	10	00	1111
RS-1	200	0101	1110	0000	1	0	1	1	1	0	1	1	1	0	1	1	0	1	1	0	1	1	10	10	00	1101
RS-1A	241	0001	1000	0000	1	0	1	1	1	0	0	1	1	0	1	1	1	1	0	0	1	1	11	11	00	1111
RS-2	347	1100	0011	0000	1	0	1	1	1	1	0	1	1	1	1	1	1	1	0	1	1	1	11	11	00	1111
RS-3	374	0001	0110	0110	0	1	1	1	1	2	1	1	1	0	1	0	0	1	1	0	0	1	10	10	00	1101
RS-4	351	0011	1010	0000	1	0	1	1	0	0	0	1	1	0	1	1	1	1	0	1	1	1	11	11	00	1111
RST-1	357	0011	1010	0000	1	0	1	1	1	0	0	1	1	0	1	1	1	1	0	0	1	1	11	11	00	1110
RT-1	001	0101	1010	0000	1	0	1	1	1	1	0	1	1	0	1	1	1	1	1	1	1	1	11	10	11	1101
S0-1	201	1111	1000	0000	1	0	1	1	1	0	0	1	1	0	0	1	1	1	1	0	1	1	11	11	11	0011
S0-2	007	1111	1110	0101	1	0	1	1	1	0	1	1	1	0	1	1	1	1	0	0	1	1	11	11	00	1001
S1-1	203	0101	1011	0000	1	0	1	1	1	0	0	1	1	0	0	1	0	1	1	0	0	0	10	11	00	1111
S1-2	244	1111	1000	0000	1	0	1	1	1	0	0	1	0	0	0	1	1	1	1	0	1	1	11	10	11	0011
S2-1	205	0011	1110	0000	1	0	1	1	1	0	0	1	1	0	0	1	0	1	1	0	1	0	10	11	00	1111

NAM	LOC	NXT	ALU	CRI	FSH	AUX	PSW	SP1	SP3	DIP	SMA	SP0	SM1	BBT	BAR	BTP	SPF	SP2	CKO	ABT	TNS	ALG	BRG	BUT
S2-2	301	1111	0011	0110	0	1	1	1	1	0	0	1	1	0	0	0	0	1	1	1	11	11	11	1111
S2-3	314	0101	1011	0101	1	0	1	1	1	0	0	1	1	0	0	0	1	1	1	0	0	0	1	11	11	00	1111
S3-1	207	1111	0001	0000	1	0	1	1	1	0	0	1	1	0	0	1	0	1	1	0	0	1	1	10	11	00	1111
S3-2	316	1111	0000	0110	0	1	1	1	1	0	0	1	1	0	0	0	1	1	1	0	1	1	1	11	11	11	1111
S3-3	317	1010	0011	0101	1	0	1	1	1	0	0	1	1	0	0	1	1	1	0	0	0	1	11	11	00	1111
S3-4	134	0100	0011	0000	1	0	1	1	1	0	0	1	0	0	0	1	1	1	1	0	1	1	1	11	10	11	1111
S3-5	274	0101	1011	0101	1	0	1	1	1	0	0	1	1	0	1	1	0	1	1	0	0	0	1	10	11	00	1111
S4-1	211	1111	0011	1001	0	0	1	1	1	0	0	1	1	0	0	0	0	1	1	0	1	0	1	10	11	11	0100
S5-1	213	1111	0000	1001	0	0	1	1	1	0	0	1	1	0	0	0	0	1	1	0	1	1	1	10	11	11	0100
S6-1	215	1110	1010	0000	1	0	1	1	1	1	0	1	1	1	1	1	0	1	1	1	1	1	1	10	11	00	1111
S6-2	025	1110	1001	0110	0	1	1	1	1	1	0	1	1	1	1	0	1	1	1	1	1	1	1	11	11	11	1111
S6-3	026	1110	1000	0101	1	0	1	1	1	1	0	1	1	1	1	1	1	1	0	1	0	1	11	11	00	1111
S6-4	027	1110	0111	0000	1	0	1	1	1	0	0	1	0	0	0	1	1	1	1	0	1	1	11	10	11	1111
S6-5	230	0101	1011	0110	0	0	1	1	1	0	0	1	1	0	0	1	0	1	1	0	0	0	10	11	00	1111
S7-1	217	1110	0101	0000	1	0	1	1	1	1	0	1	1	1	1	1	0	1	1	1	1	1	10	11	00	1111
S7-2	232	1110	0100	0110	0	1	1	1	1	1	0	1	1	1	1	0	1	1	1	1	1	1	11	11	11	1111
S7-3	233	1110	0011	0101	1	0	1	1	1	1	0	1	1	1	1	1	1	1	0	1	0	1	11	11	00	1111
S7-4	234	1110	0010	0000	1	0	1	1	1	0	0	1	0	0	0	1	1	1	1	0	1	1	11	10	11	1111
S7-5	235	1010	0011	0110	0	0	1	1	1	0	0	1	1	0	0	1	0	1	1	0	0	1	10	11	00	1111
SB1-1	166	1000	0101	1110	0	0	0	1	1	0	0	1	1	0	1	1	1	1	1	0	1	1	11	11	01	1111
SB1-2	172	1000	0100	1110	0	0	0	1	1	0	0	1	1	0	1	1	1	1	1	0	1	1	11	11	01	1111
SB1-3	173	1000	0011	1110	0	0	0	1	1	0	0	1	1	0	1	1	1	1	1	0	1	1	11	11	01	1111
SB1-4	174	1001	1011	1110	0	0	0	1	1	0	0	1	1	0	1	1	1	1	1	0	1	1	11	11	01	1111
SB1-5	144	1000	0001	1110	0	0	0	1	1	0	0	1	1	0	1	1	1	1	1	0	1	1	11	11	01	1111
SB1-6	176	1000	0000	1110	0	0	0	1	1	0	0	1	1	0	1	1	1	1	1	0	1	1	11	11	01	1111
SB1-7	177	1111	1001	1110	0	0	0	1	1	0	0	1	1	0	1	1	1	1	1	0	1	1	11	11	01	1111
SB1-8	206	1001	0010	1110	0	0	1	1	1	0	0	1	1	0	1	1	1	1	1	0	1	1	11	11	01	1111
SB2-1	167	1111	0101	1110	0	0	0	1	1	0	0	1	1	0	1	1	1	1	1	0	1	1	11	11	01	1111
SB2-2	212	0110	1111	1110	0	0	0	1	1	0	0	1	1	0	1	1	1	1	1	0	1	1	11	11	01	1111
SB2-3	220	1110	1101	1110	0	0	0	1	1	0	0	1	1	0	1	1	1	1	1	0	1	1	11	11	01	1111
SB2-4	222	1110	1100	1110	0	0	0	1	1	0	0	1	1	0	1	1	1	1	1	0	1	1	11	11	01	1111
SB2-5	223	1110	1011	1110	0	0	0	1	1	0	0	1	1	0	1	1	1	1	1	0	1	1	11	11	01	1111
SB2-6	224	1110	0110	1110	0	0	0	1	1	0	0	1	1	0	1	1	1	1	1	0	1	1	11	11	01	1111
SB2-7	231	0010	0111	1110	0	0	0	1	1	0	0	1	1	0	1	1	1	1	1	0	1	1	11	11	01	1111
SB2-8	330	1000	1100	1110	0	0	1	1	1	0	0	1	1	0	1	1	1	1	1	0	1	1	11	11	01	1111
SB2-1	247	1111	1110	0101	1	0	1	1	1	0	1	1	1	0	1	1	1	0	0	0	1	1	11	11	00	1001
SB0-1	367	0001	1001	0000	1	0	0	1	1	0	0	1	1	0	1	1	1	1	1	0	1	1	11	11	10	1111
SB0-2	346	0010	1011	0000	1	0	0	1	1	0	0	1	1	0	1	1	1	1	1	0	1	1	11	11	10	1111
SB0-3	324	0001	1111	0000	1	0	0	1	1	0	0	1	1	0	1	1	1	1	1	0	1	1	11	11	10	1111
SB0-4	340	0000	1110	0000	1	0	0	1	1	0	0	1	1	0	1	1	1	1	1	0	1	1	11	11	10	1111

NAM	LOC	NXT	ALU	CRI	FSH	AUX	PSW	SP1	SP3	DIP	SMA	SP0	SM1	BBT	BAR	BTP	SPF	SP2	CKO	ABT	TNS	ALG	BRG	BUT
SB0-5	361	1101	0111	0000	1	0	0	1	1	0	0	1	1	0	1	1	1	0	1	1	11	11	10	1111
SB0-6	050	1110	1111	0000	1	0	0	1	1	0	0	1	1	0	1	1	1	0	1	1	11	11	10	1111
SB0-7	020	1101	0101	0000	1	0	0	1	1	0	0	1	1	0	1	1	1	0	1	1	11	11	10	1111
SB0-8	052	1101	1000	0000	1	0	1	1	1	0	0	1	1	0	1	1	1	0	1	1	11	11	10	1111
SC-1	116	1101	1111	0100	1	0	1	1	0	0	0	1	1	0	1	1	1	0	1	1	11	00	00	1100
T-1	021	0101	1010	0000	1	0	1	1	1	0	0	1	1	0	1	1	1	0	1	1	11	10	11	1101
U1-1	352	1000	1101	0101	1	0	1	1	1	0	1	1	1	0	1	1	1	0	0	1	11	11	00	1111
U2-1	353	1000	1100	0101	1	0	1	1	1	0	1	1	1	0	1	1	1	0	0	1	11	11	00	1111
U3-1	354	1000	1011	0101	1	0	1	1	1	0	1	1	1	0	1	1	1	0	0	1	11	11	00	1111
U4-1	355	1000	1010	0101	1	0	1	1	1	0	1	1	1	0	1	1	1	0	0	1	11	11	00	1111
U5-1	373	1000	1100	0101	1	0	1	1	1	0	1	1	1	0	1	1	1	0	0	1	11	11	00	1111
URTR	064	0101	1010	0000	1	0	1	1	1	1	1	1	1	0	1	1	1	0	1	1	11	10	11	1101
URTX	060	0101	1010	0000	1	0	1	1	1	0	0	1	1	1	1	1	1	0	1	1	11	10	11	1101
W-1	063	1101	1111	0000	1	0	1	1	1	0	0	1	1	0	1	1	1	0	1	1	11	11	00	1100

PAGE REVISION CONTROL SHEET

SH NO.	PAGE REVISIONS	REMARKS
1		
2		
3		
ECO NO.		
ETCH REV.		
ENG.		
DATE		

FIRST USED ON OPTION/MODEL

KD11-B

DRN.	J. Madden	DATE 4-21-72
CHK'D.	R. L. Kusik	DATE 4-2-72
ENG.	R. L. Kusik	DATE 5-2-72
PROJ. ENG.	R. L. Kusik	DATE 5-2-72
PROD.	R. K. Hirsing	DATE 5-2-72

digital EQUIPMENT CORPORATION
MAYNARD, MASSACHUSETTS

TITLE

MICROPROGRAM CROSS REFERENCE LISTING

NEXT HIGHER ASSY.

B-DD-KD11-B

SCALE

SHEET 1 OF 3

SIZE	CODE	NUMBER	REV.
K	MP	KD11-B-4	

DIST.

000	RS-1	001	RT-1	002	*****	003	ET2-2	004	ET2-3	005	R1-1	006	SB1-8	007	S0-2
010	ERT-1	011	ET-1	012	SB2-2	013	B2-2D	014	S2-3	015	B-1	016	S3-2	017	S3-3
020	SB0-7	021	T-1	022	SB2-4	023	SB2-5	024	SB2-6	025	S6-2	026	S6-3	027	S6-4
030	S6-5	031	SB2-7	032	S7-2	033	S7-3	034	S7-4	035	S7-5	036	ET2-5	037	ET2-6
040	BG-1	041	W-1	042	LC-1	043	PF-1	044	*****	045	BT-1	046	ERT1A	047	SBE-1
050	SB0-6	051	ET2-7	052	SB0-8	053	F-2	054	*****	055	*****	056	*****	057	D6-4
060	URTX	061	F-5	062	F-1	063	W-1	064	URTR	065	D1-6	066	*****	067	SB0-1
070	D3-3	071	D3-4	072	D3-5	073	*****	074	RS-3	075	D6-2	076	*****	077	D6-3
100	CS-1	101	D0-1	102	*****	103	D1-1	104	D7-3	105	D2-1	106	D7-5	107	D3-1
110	DBE-1	111	D4-1	112	CC-1	113	D5-1	114	*****	115	D6-1	116	SC-1	117	D7-1
120	*****	121	*****	122	*****	123	D0-2	124	D0-3	125	D0-4	126	D0-5	127	D0-6
130	D0-7	131	D0-8	132	D0-9	133	*****	134	S3-4	135	D0-12	136	D0-13	137	D0-14
140	D0-15	141	D0-16	142	D0-17	143	D0-18	144	SB1-5	145	A145	146	B-3	147	R-2
150	*****	151	CCM-1	152	MB-2	153	ERT1B	154	MB-0	155	D0-3A	156	DB0-1	157	D0-2
160	D3-2	161	*****	162	D0-3	163	D1-4	164	DB0-2	165	D0-10	166	SB1-1	167	SB2-1
170	*****	171	*****	172	SB1-2	173	SB1-3	174	SB1-4	175	*****	176	SB1-6	177	SB1-7
200	D1-2	201	S0-1	202	*****	203	S1-1	204	J1-1	205	S2-1	206	J2-4	207	S3-1
210	D1-3	211	S4-1	212	J2-1	213	S5-1	214	J2-3	215	S6-1	216	J2-5	217	S7-1
220	SB2-3	221	R1-2	222	R1-3	223	R1-4	224	R1-5	225	R1-6	226	ET-6	227	R2-1
230	R2-2	231	R2-3	232	R2-4	233	*****	234	R2-6	235	R2-7	236	R2-8	237	R2-9
240	MB-1	241	RS-1A	242	*****	243	*****	244	S1-2	245	ET-2	246	ET-3	247	ET-5
250	DE-1	251	ET-7	252	ET-8	253	ET-9	254	ET-10	255	ET-11	256	ET-12	257	ET-13
260	J1-2	261	J2-1A	262	J2-2	263	J2-6	264	J2-7	265	J2-8	266	*****	267	*****
270	D0-1	271	*****	272	CCS-3	273	IT-1	274	S3-5	275	*****	276	CCS-2	277	*****
300	D6-5	301	S2-2	302	W-2	303	CD1-2	304	DB0-3	305	B2-2	306	*****	307	CE1-2
310	D7-2	311	CL-1	312	CD2-1	313	CD1-1	314	CD1-4	315	CE2-1	316	CCS-1	317	CE1-1
320	D7-4	321	CS-3	322	CS-2	323	*****	324	SB0-3	325	INT-1	326	CE1-3	327	*****
330	SB2-8	331	D2-2	332	D0-4	333	B2-2A	334	D1-5	335	B2-2B	336	*****	337	CD2-2
340	SB0-4	341	D2-3	342	D0-11	343	B2-2C	344	*****	345	*****	346	SB0-2	347	RS-2
350	CCM-2	351	RS-4	352	U1-1	353	U2-1	354	U3-1	355	U4-1	356	*****	357	RST-1
360	*****	361	SB0-5	362	*****	363	*****	364	F-4	365	F-3	366	*****	367	CL-3
370	*****	371	CE2-2	372	CD1-5	373	U5-1	374	CD1-3	375	CL-2	376	*****	377	*****

A145	145	D6-1	115	F-4	364	S5-1	213
B-1	015	D6-2	075	F-5	061	S6-1	215
B-2	147	D6-3	077	W-1	041	S6-2	025
B-3	146	D6-4	057	W-2	302	S6-3	026
B2-2	305	D6-5	300	INT-1	325	S6-4	027
B2-2A	333	D7-1	117	IT-1	273	S6-5	030
B2-2B	335	D7-2	310	J1-1	204	S7-1	217
B2-2C	343	D7-3	104	J1-2	260	S7-2	032
B2-2D	013	D7-4	320	J2-1	212	S7-3	033
BG-1	040	D7-5	106	J2-1A	261	S7-4	034
BT-1	045	DB0-1	156	J2-2	262	S7-5	035
CC-1	112	DB0-2	164	J2-3	214	SB1-1	166
CCM-1	151	DB0-3	304	J2-4	206	SB1-2	172
CCM-2	350	DBE-1	110	J2-5	216	SB1-3	173
CCS-1	316	DE-1	250	J2-6	263	SB1-4	174
CCS-2	276	D0-1	270	J2-7	264	SB1-5	144
CCS-3	272	D0-10	165	J2-8	265	SB1-6	176
CD1-1	313	D0-11	342	LC-1	042	SB1-7	177
CD1-2	303	D0-12	135	MB-0	154	SB1-8	006
CD1-3	374	D0-13	136	MB-1	240	SB2-1	167
CD1-4	314	D0-14	137	MB-2	152	SB2-2	012
CD1-5	372	D0-15	140	PF-1	043	SB2-3	220
CD2-1	312	D0-16	141	R1-1	005	SB2-4	022
CD2-2	337	D0-17	142	R1-2	221	SB2-5	023
CE1-1	317	D0-18	143	R1-3	222	SB2-6	024
CE1-2	307	D0-2	123	R1-4	223	SB2-7	031
CE1-3	326	D0-3	124	R1-5	224	SB2-8	330
CE2-1	315	D0-4	125	R1-6	225	SBE-1	047
CE2-2	371	D0-5	126	R2-1	227	SB0-1	067
CL-1	311	D0-6	127	R2-2	230	SB0-2	346
CL-2	375	D0-7	130	R2-3	231	SB0-3	324
CL-3	367	D0-8	131	R2-4	232	SB0-4	340
CS-1	100	D0-9	132	R2-6	234	SB0-5	361
CS-2	322	ERT-1	010	R2-7	235	SB0-6	050
CS-3	321	ERT1A	046	R2-8	236	SB0-7	020
D0-1	101	ERT1B	153	R2-9	237	SB0-8	052
D0-2	157	ET-1	011	RS-1	000	SC-1	116
D0-3	162	ET-10	254	RS-1A	241	T-1	021
D0-3A	155	ET-11	255	RS-2	347	U1-1	352
D0-4	332	ET-12	256	RS-3	074	U2-1	353
D1-1	103	ET-13	257	RS-4	351	U3-1	354
D1-2	200	ET-2	245	RST-1	357	U4-1	355
D1-3	210	ET-3	246	RT-1	001	U5-1	373
D1-4	163	ET-5	247	S0-1	201	URTR	064
D1-5	334	ET-6	226	S0-2	007	URTX	060
D1-6	065	ET-7	251	S1-1	203	W-1	063
D2-1	105	ET-8	252	S1-2	244	000	
D2-2	331	ET-9	253	S2-1	205	000	
D2-3	341	ET2-2	003	S2-2	301	000	
D3-1	107	ET2-3	004	S2-3	014	000	
D3-2	160	ET2-5	036	S3-1	207	000	
D3-3	070	ET2-6	037	S3-2	016	000	
D3-4	071	ET2-7	051	S3-3	017	000	
D3-5	072	F-1	062	S3-4	134	000	
D4-1	111	F-2	053	S3-5	274	000	
D5-1	113	F-3	365	S4-1	211	000	

PAGE REVISION CONTROL SHEET

SH NO.	PAGE REVISIONS					REMARKS
1	J	K	L	M	N	
2	J	K	L	M	N	
3	J	J	J	M	N	
4	J	J	J	M	N	
5	J	J	J	M	M	
6	J	J	J	M	M	
7	J	J	J	M	M	
8	J	J	J	M	N	
9	J	J	J	M	M	
10	J	K	L	M	M	
11	J	J	J	M	M	
12	-	-	-	M	M	
ECO NO.	00007	00008	00009	00010C 10A	00012	
ETCH REV.	B	B	B	C	C	
ENG.	M.T.	B.A.	M.T.	BA	M.T.	
DATE	10-11-72	10-30-72	11-27-72	2-23-73	6-19-73	

FIRST USED ON OPTION/MODEL

KD11-B

DRN. B. Hall	DATE 10-16-72	digital EQUIPMENT CORPORATION MAYNARD, MASSACHUSETTS
CHK'D. M. Titelbaum	DATE 10/26/72	
ENG. M. Titelbaum	DATE 10/26/72	TITLE DATA PATHS
PROJ. ENG. M. Titelbaum	DATE	
PROD.	DATE	

NEXT HIGHER ASSY.: B-DD-KD11-B

SCALE: ++

SHEET 1 OF 12

SIZE	CODE	NUMBER	REV.
B	CS	M7260-0-1	N

DIST.

NOTES:

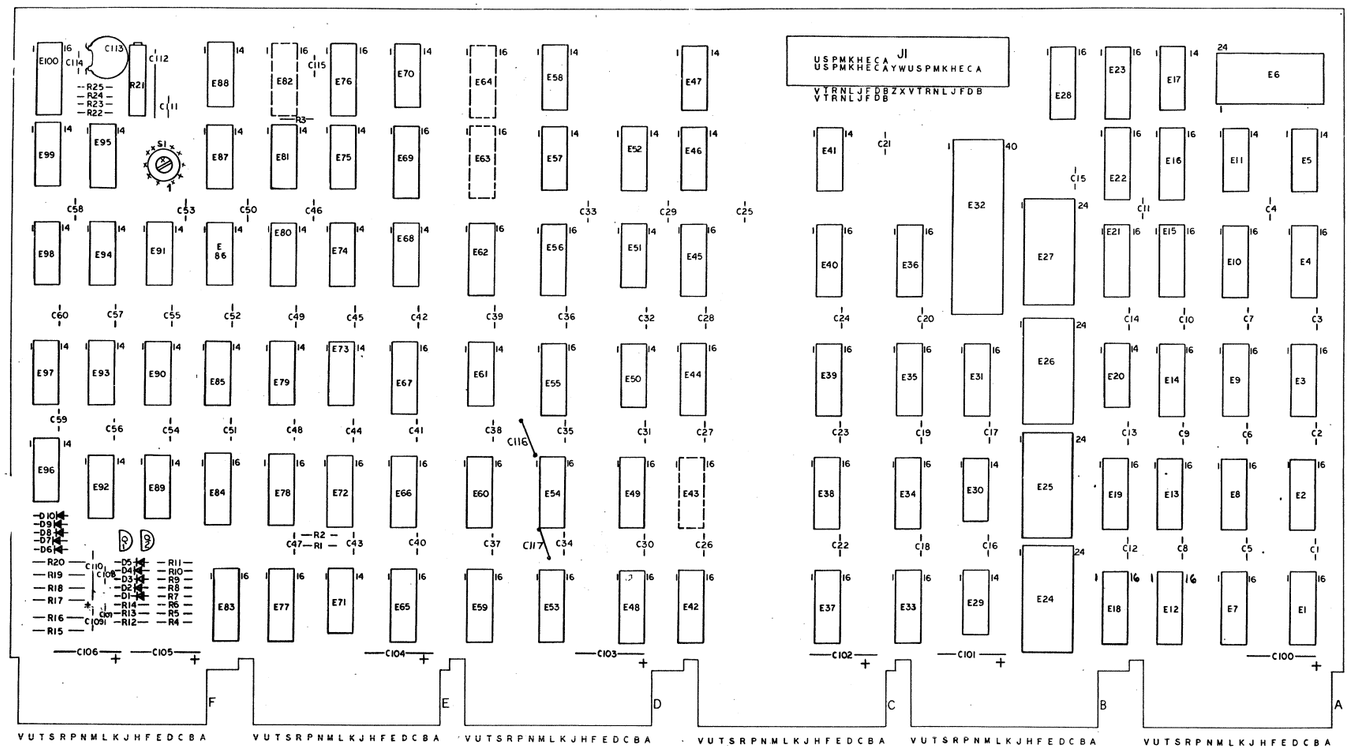

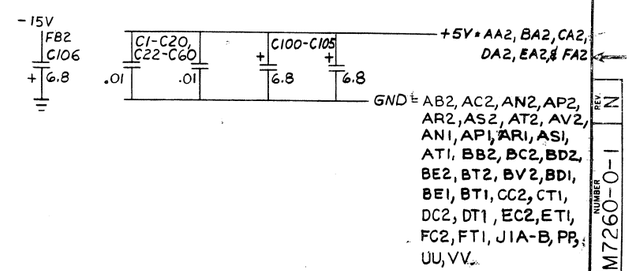

DEC 74174	8	16
DEC 74175	8	16
DEC 7489	8	16
DEC 1808	3	1
DEC 74182	8	16
DEC 74181	12	24
DEC 74157	8	16
DEC 74S158	8	16
DEC 74153	8	16
DEC 74194	8	16
DEC 74150	12	24
DEC 8838	8	16
IC TYPE	GND	+ 5V

GND AND 5V ARE USUALLY PIN 7 AND 14 RESPECTIVELY EXCEPTIONS ARE STATED ABOVE

IC PIN LOCATIONS

QTY	REF DESIGNATION	DESCRIPTION	PART NO.	ITEM NO.
		PARTS LIST		
	ETCH BOARD REV	C		

FIRST USED ON OPTION MODEL

DEC NO.	EIA NO.	DEC NO.	EIA NO.

SEMICONDUCTOR CONVERSION CHART

REVISIONS: REV / CHANGE NO. / CHK

DRN. DATE 1/22/73
CHK'D DATE 2/28/73
ENG. DATE
PROJ. ENG. DATE
PROD. DATE

NEXT HIGHER ASSY B-DD-K

SCALE

SHEET 2 OF

digital EQUIPMENT CORPORATION MAYNARD MASSACHUSETTS

TITLE DATA PATHS

SIZE D CODE CS NUMBER M7260 REV. N

DST

BRUNING 40-522 16699

DEC FORM NO. DRD-135A

NOTES:

QTY	REF DESIGNATION	DESCRIPTION	PART NO.	ITEM NO.
REF		ETCH CIRCUIT BOARD		1
REF		X-Y COORDINATE HOLE/LAYOUT	M7260-0-4	2
REF		DATA PATH ASSY HOLE/LAYOUT	M7260-0-5	3
REF		MODULE ECO HISTORY	M7260-0-6	4
63	C1-60,108,109,111	CAP .01 MFD,100V, 20% DISC	1001610	5
1	C110	CAP .47 MFD, 35V, 10%	1005965	6
3	C107,114,116	CAP 1000.0 MMF, 100V 5%	1000042	7
1	C113	CAP 4700 MMF, 100V,5%	1002895	8
1	C112	CAP 39 MFD, 10V 10%	1000076	9
7	C100-106	CAP 6.8 MFD, 35V, 10%	1005306	10
1	C115	CAP 120.0 MMF, 100V, 5%	1000018	11
10	D1-10	DIODE D664	1100114	12
4	E1-4	IC DEC 8838	1911117	13
2	E5,11	IC DEC 7430	1905578	14
1	E6	IC DEC 74150	1910153	15
8	E7-10,33-36	IC DEC 8266	1909934	16
4	E12-15	IC DEC 74194	1910623	17
3	E16,22,28	IC DEC 74153	1909937	18
5	E17,75,79,85,91	IC DEC 7402	1909004	19
3	E18,19,21	IC DEC 74S158	1910549	20
7	E20,29,57,74,96,98,99	IC DEC 7400	1905575	21
2	E23,62	IC DEC 74157	1910655	22
4	E24-27	IC DEC 74181	1909982	23
2	E30,89	IC DEC 7437	1910091	24
1	E31	IC DEC 74182	1910019	25
1	E32	IC DEC 1808 UART	1910459	26
4	E37-40	IC DEC 7489	1910396	27
9	E41,46,50,51,70,71,73,80,81	IC DEC 74H01-1	1909849	28
4	E42,45,60,84	IC RES NETWORK	1311003-02	29
1	E47	IC DEC 7408	1910155	30
3	E48,55,56	IC DEC 74175	1910651	31
2	E49,67	IC DEC 74174	1910652	32
1	E44	IC ROM (CONSTANTS)	23A01A1	33
5	E52,86,90,93,97	IC DEC 7474	1905547	34
1	E53	IC ROM (DOP AUX)	23A02A1	35
1	E54	IC ROM (SOP AUX #1)	23A03A1	36
2	E58,87	IC DEC 7404	1909686	37
1	E59	IC ROM (DOP 1R)	23A05A1	38
1	E61	IC DEC 7410	1905576	39
1	E65	IC ROM (CC OR OP)	23A04A1	40
1	E66	IC ROM (SOP AUX #2)	23A06A1	41
1	E68	IC DEC 7486	1910011	42
1	E69	IC ROM (C + V - BIT)	23A12A1	43
1	E72	IC ROM (BRANCH)	23A03A2	44
2	E78,100	IC DEC 9602	1910951	45
1	E77	IC ROM (ENB UNARY)	23A10A1	46
1	E78	IC ROM (NOT DOP)	23A08A1	47
1	E83	IC ROM (ODD BYTE EQ 0)	23A11A1	48
2	E88,95	IC DEC 74197	1910035	49
1	E92	IC DEC 7413	1909989	50
1	E94	IC DEC 7473	1905587	51
1	J1	CONNECTOR, BERG	1209941	52
1	R5	RES 1.5K 1/4W 5%	1300391	53
2	R13,14	RES 470 1/4w 5%	1300316	54
2	R19,20	RES 12K 1/2W 5%	1300487	55
2	R15,16	RES 1.5K 1/2W 5%	1300394	56
1	R22	RES 10 1/4W 5%	1301317	57
2	R3,25	RES 30K 1/4W 5%	1302394	58
1	R10	RES 150 1/4W 5%	1300250	59
1	R17	RES 68 1/2W 10%	1300220	60
1	R2	RES 2K 1/4W 5%	1302388	61
1	R21	RES 20K 3/4W 10% POT	1309143-11	62
6	R1,6-9,23	RES 1K 1/4W 5%	1300365	63
1	R4	RES 750 1/4W 5%	1301401	64
1	R12	RES 82 1/4W 5%	1301477	65
1	R18	RES 560 1/2W 5%	1300338	66
2	R11,24	RES 10K 1/4W 5%	1300479	67
2	Q1,2	TRANS DEC 6534D PNP	1503409	68
12		EYELETS	9006732	69
1		MODULE HANDLE	1210711-2	70
1	S1	SWITCH,ROT 1 POLE 10 POSITION DRY	1210042-1	71
1		HEX NUT NYLON	9007992	72
1	C117	CAP 120 MMF 100V 5%	1000021	73

FIRST USED ON OPTION MODEL: 11/05

PARTS LIST

ETCH BOARD REV C

IC TYPE	GND	+5V
DEC 9602	8	16
ROM 23AXXA1	8	16
ROM 23AXXA2	8	16
DEC 7473	4	11
DEC 9602	8	16

GND AND 5V ARE USUALLY PIN 7 AND 14 RESPECTIVELY EXCEPTIONS ARE STATED ABOVE

IC PIN LOCATIONS

REV	CHANGE NO.	DEC NO.	EIA NO.	DEC NO.	EIA NO.

REVISIONS

CHK

SEMICONDUCTOR CONVERSION CHART

DRN DATE 1/12/73
CHK'D DATE 2/23/73
ENG DATE 2/23/73
PROJ. ENG. DATE 2/26/73
PROD. DATE

NEXT HIGHER ASSY B-DD-KD11-B

SCALE —

SHEET 3 OF

digital EQUIPMENT CORPORATION MAYNARD, MASSACHUSETTS

TITLE DATA PATHS

SIZE D CODE CS NUMBER M7260-0-1 REV. N

DIST.

BRUNING 40-522 16699

DEC FORM NO. DRD-135A

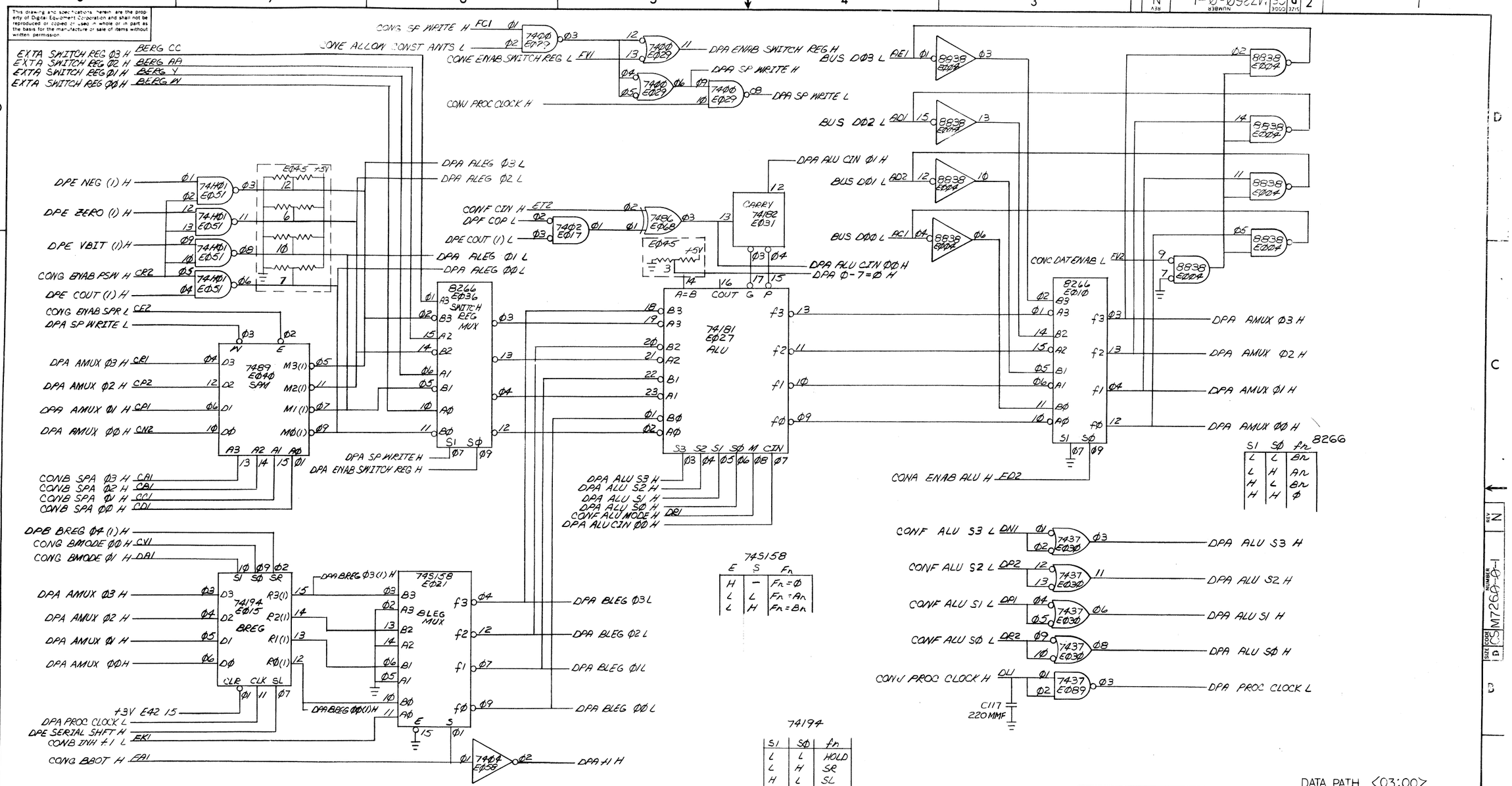

DATA PATH <03:00>

FIRST USED ON OPTION/MODEL	QTY.	DESCRIPTION	PART NO.	ITEM NO.
11/Ø5		PARTS LIST		

UNLESS OTHERWISE SPECIFIED DIMENSION IN INCHES. TOLERANCES

DECIMALS	ANGLES
.XXX = .005	±0° 30'
.XX = .02	
.X = .1	

REMOVE BURRS AND BREAK SHARP CORNERS SURFACE QUALITY ✓

MATERIAL

FINISH

DRN. Jim Rubica DATE 12/2/72
CHK'D DATE 12/23/73
ENG. DATE 12/23/73
PROJ. ENG. DATE 12/23/73
PROD. DATE 12/23/73

digital EQUIPMENT CORPORATION MAYNARD MASSACHUSETTS

TITLE DATA PATH (DPA)

NEXT HIGHER ASSY B-DD-KD11-E

SCALE

SHEET OF

SIZE D CODE CS NUMBER M7250-0-1 REV. N

DIST

REVISIONS: REV / CHANGE NO / CHK

DRM NO 72-B

40-522 15840

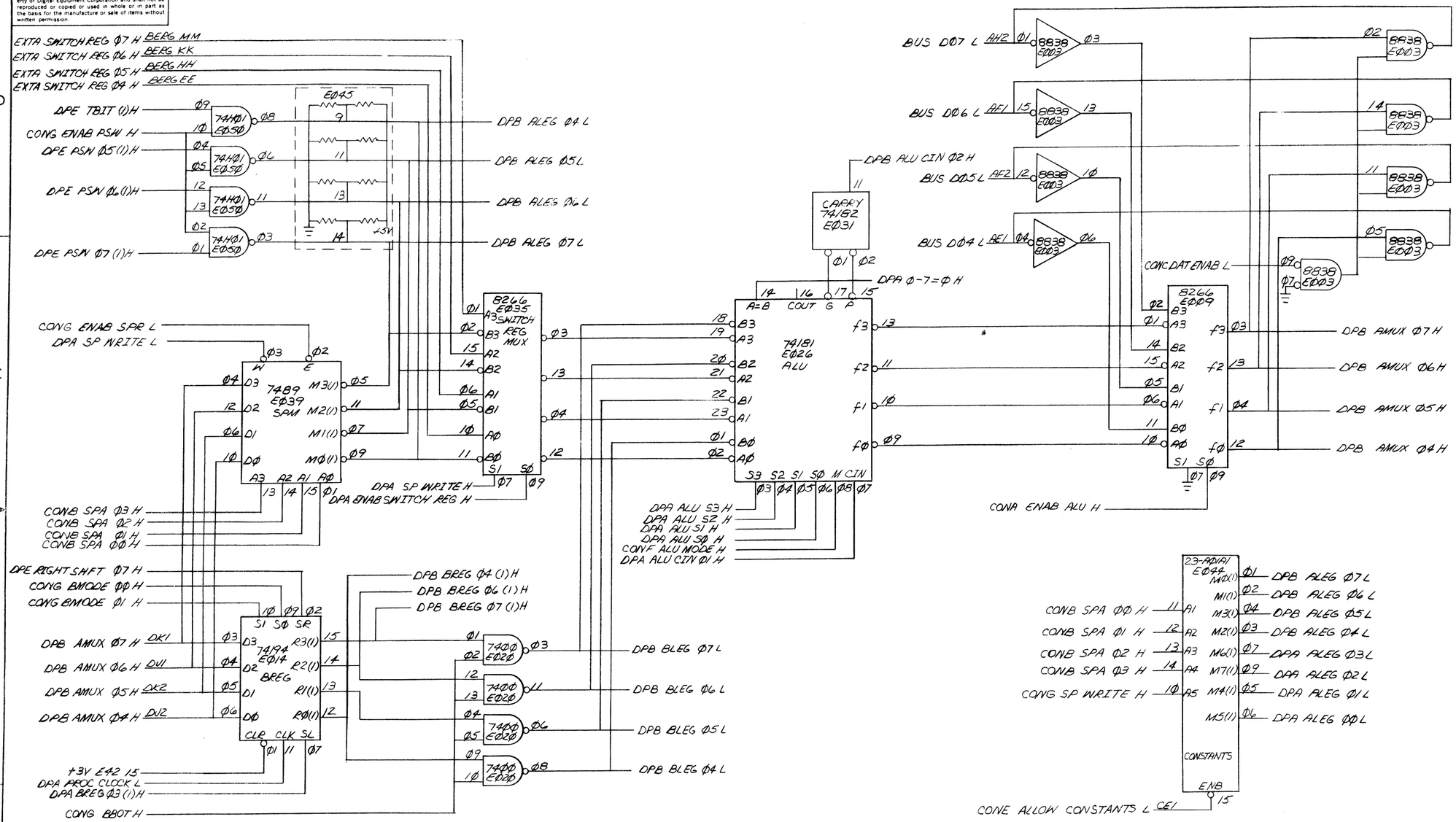

DATA PATH ⟨Ø7:Ø4⟩

FIRST USED ON OPTION/MODEL	QTY.	DESCRIPTION	PART NO.	ITEM NO.
11/Ø5		PARTS LIST		

UNLESS OTHERWISE SPECIFIED DIMENSION IN INCHES TOLERANCES

DECIMALS	ANGLES
XXX = .005 XX = .02 X = .1	± 0° 30'

REMOVE BURRS AND BREAK SHARP CORNERS SURFACE QUALITY ✓

MATERIAL —

FINISH —

DRN. M. Rizzi	DATE 12/5/70	digital EQUIPMENT CORPORATION MAYNARD MASSACHUSETTS
CHK'D	DATE 2/28/73	
ENG.	DATE 2/28/73	TITLE DATA PATHS (DPB)
PROJ. ENG.	DATE 2/27/73	
PROD.	DATE 4/25/73	
NEXT HIGHER ASSY. B-DD-KD11-B		
SCALE —		
SHEET 5 OF		

SIZE	CODE	NUMBER	REV.
D	CS	M7269-0-1	M

DIST.

REV.	CHANGE NO.	CHK

REVISIONS

BRUNING 40-522 15640

DEC FORM NO DRD 102-B

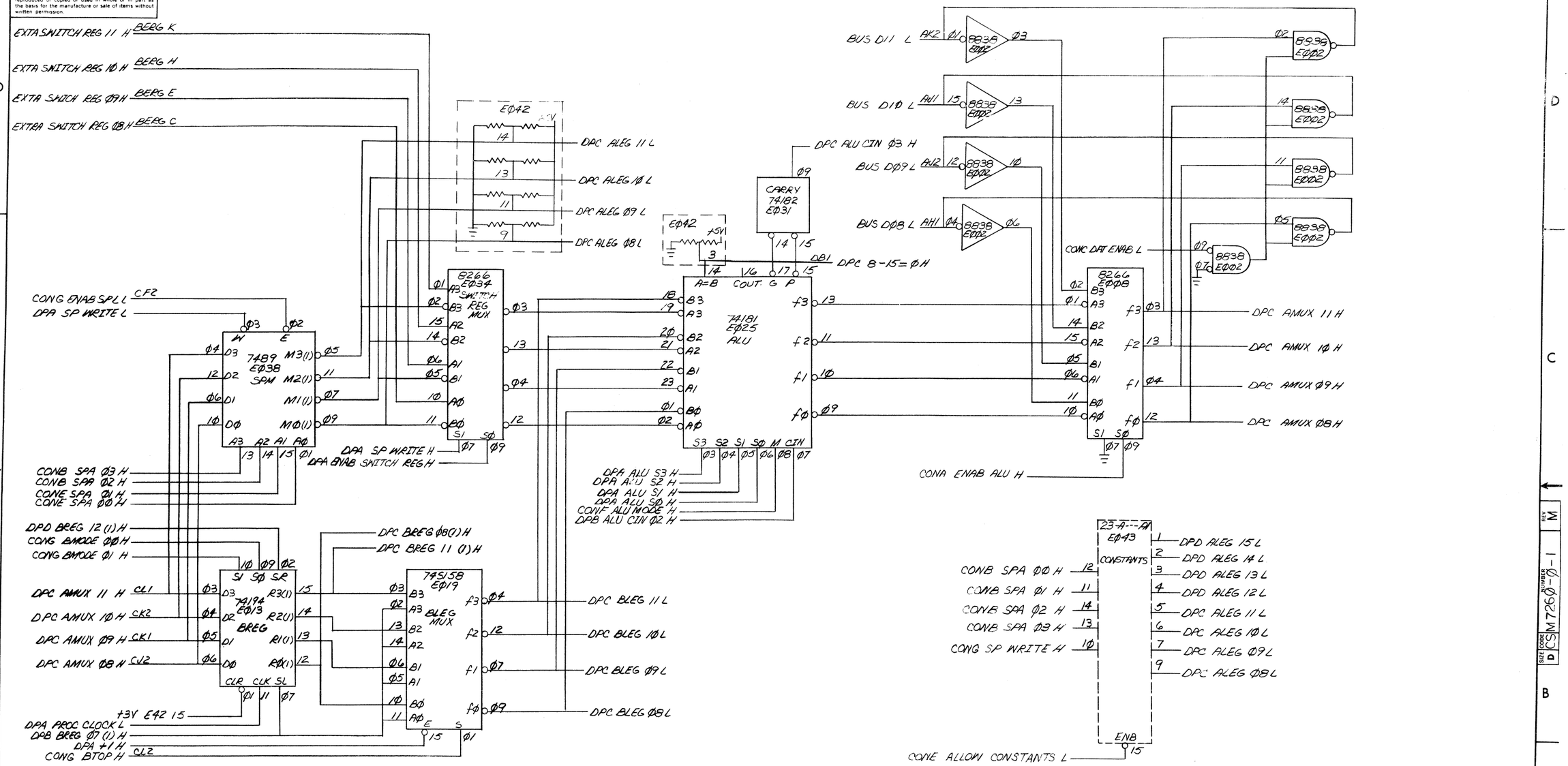

DATA PATH <11:08>

FIRST USED ON OPTION/MODEL	QTY.	DESCRIPTION	PART NO.	ITEM NO.
11/05		PARTS LIST		

UNLESS OTHERWISE SPECIFIED DIMENSION IN INCHES. TOLERANCES

DECIMALS	ANGLES
.XXX = .005	±0° 30'
.XX = .02	
.X = .1	

REMOVE BURRS AND BREAK SHARP CORNERS SURFACE QUALITY ✓

MATERIAL

FINISH

DRN. M. Rosten	DATE 12/5/72	digital EQUIPMENT CORPORATION MAYNARD MASSACHUSETTS
CHK'D.	DATE 2/23/73	
ENG.	DATE 2/23/73	TITLE DATA PATHS
PROJ. ENG.	DATE 2/23/73	
PROD.	DATE 2/23/73	
NEXT HIGHER ASSY.		
SCALE		
SHEET	OF	

SIZE D CODE CS NUMBER M7260-0-1 REV. M

DPC

REV M | CODE CS | SIZE D | NUMBER M7260-0-1

REVISIONS: REV | CHANGE NO | CHK

MKUNING 40-522 15840

DPC 122-B

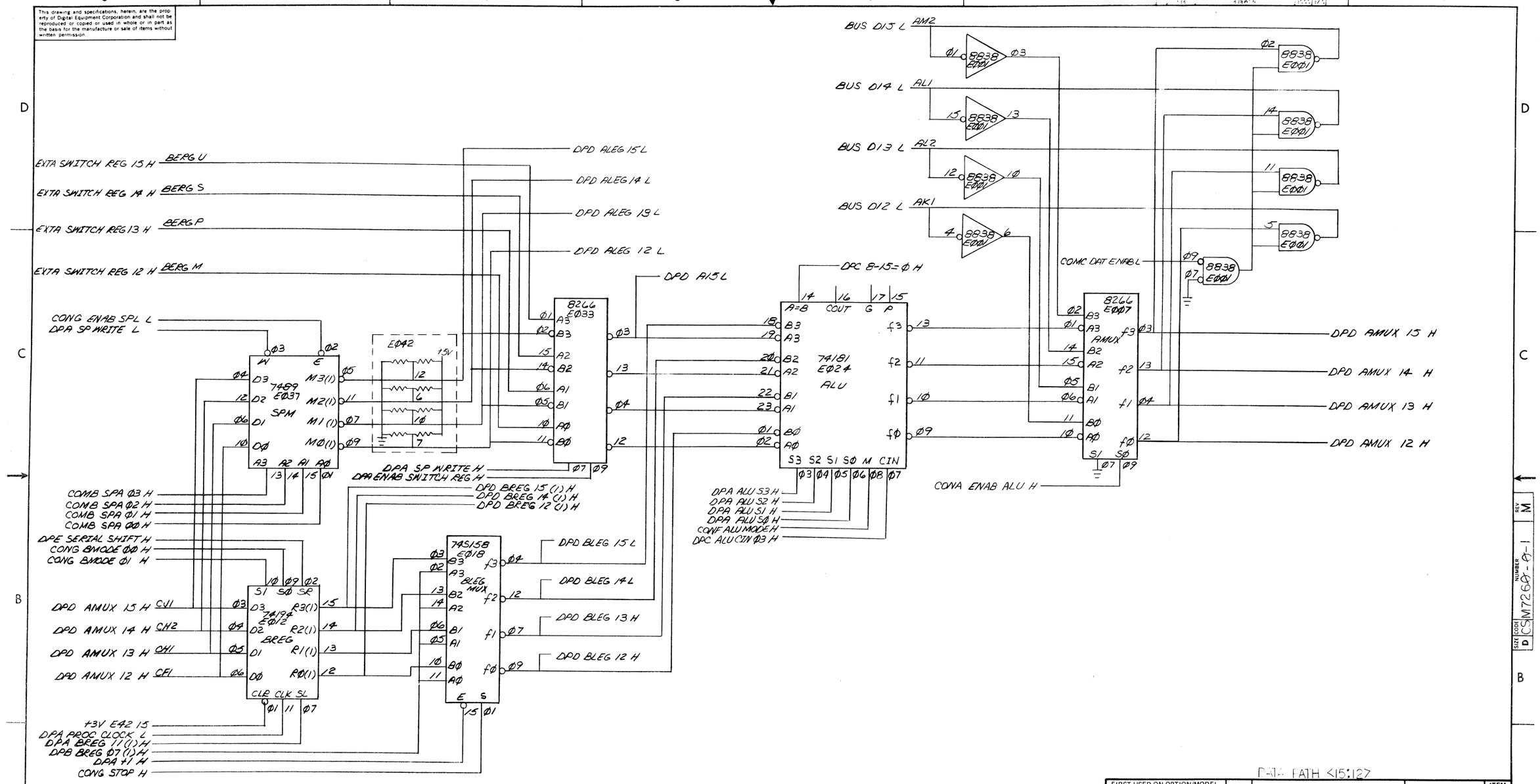

DATA PATH <15:12>

FIRST USED ON OPTION/MODEL	QTY.	DESCRIPTION	PART NO.	ITEM NO.
11/Ø5		PARTS LIST		

UNLESS OTHERWISE SPECIFIED DIMENSION IN INCHES. TOLERANCES

DECIMALS	ANGLES
.XXX = .005 .XX = .02 .X = .1	±0° 30'

REMOVE BURRS AND BREAK SHARP CORNERS SURFACE QUALITY ✓

MATERIAL

FINISH

DRN. M. Pierce DATE 11/29/72
CHK'D. DATE 12/23/72
ENG. DATE 12/23/73
PROJ. ENG. DATE 12/23/73
PROD. DATE

NEXT HIGHER ASSY.

digital EQUIPMENT CORPORATION MAYNARD MASSACHUSETTS

TITLE DATA PATHS

SIZE D CODE CS NUMBER M7268-0-1 REV M

REVISIONS REV CHANGE NO CHK

BRUNING 40-522 15840

DEC FORM NO FRD 102-B

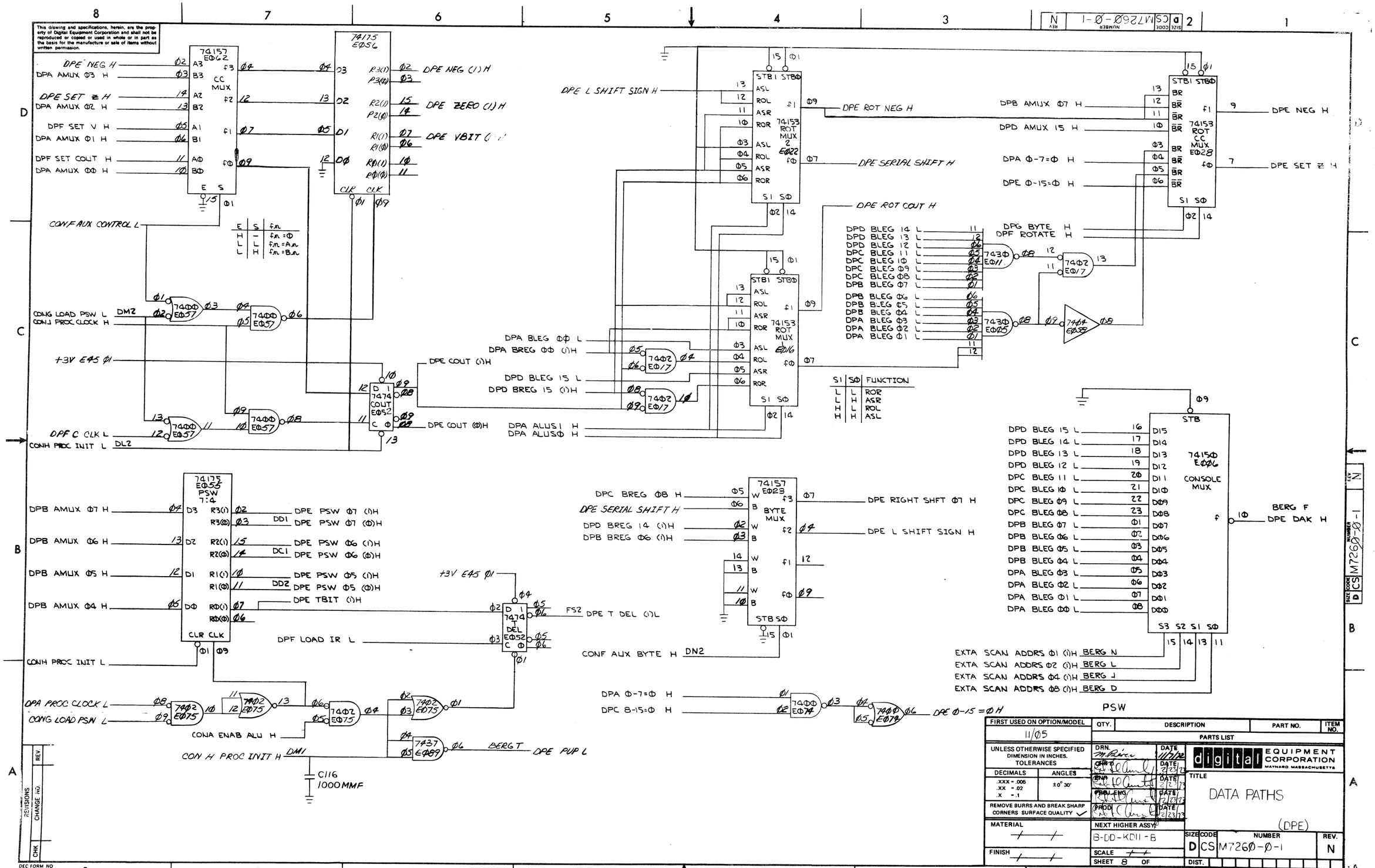

FIRST USED ON OPTION/MODEL	QTY.	DESCRIPTION	PART NO.	ITEM NO.
11/Φ5		PARTS LIST		

UNLESS OTHERWISE SPECIFIED DIMENSION IN INCHES. TOLERANCES

DECIMALS	ANGLES
.XXX = .005	±0° 30'
.XX = .02	
.X = .1	

REMOVE BURRS AND BREAK SHARP CORNERS SURFACE QUALITY ✓

MATERIAL —

FINISH —

		DATE
DRN.	M. Price	11/7/72
CHK'D		12/23/72
ENG		12/23/72
MGR ENG		12/23/72
PROD		12/23/72

NEXT HIGHER ASSY. B-DD-KD11-B

SCALE —

SHEET 8 OF

digital EQUIPMENT CORPORATION MAYNARD, MASSACHUSETTS

TITLE DATA PATHS (DPE)

SIZE	CODE	NUMBER	REV.
D	CS	M7260-0-1	N

DIST.

REVISIONS: REV. / CHANGE NO. / CHK

DEC FORM NO DRD 102-B

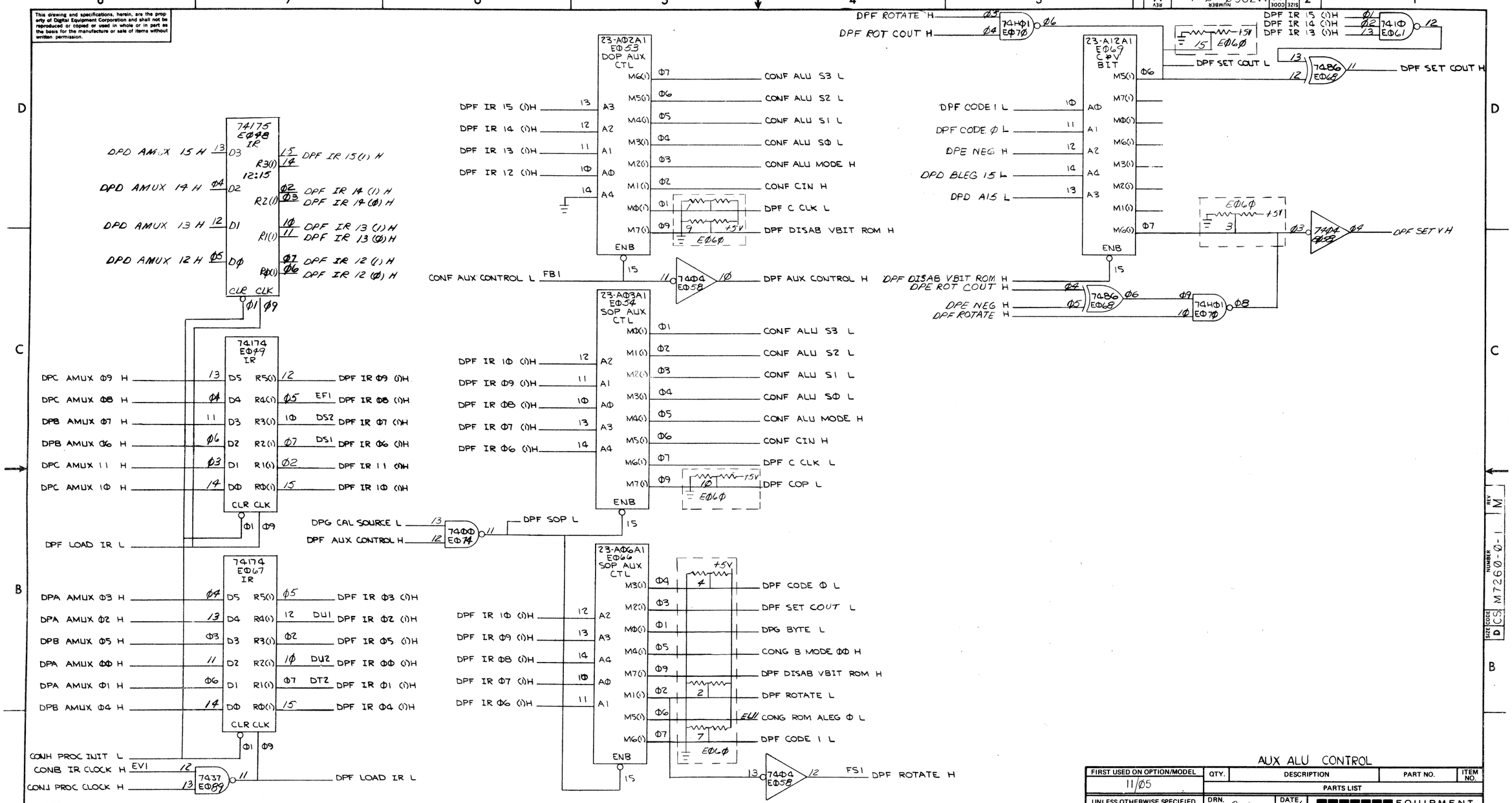

AUX ALU CONTROL

FIRST USED ON OPTION/MODEL	QTY.	DESCRIPTION	PART NO.	ITEM NO.
11/Ø5		PARTS LIST		

UNLESS OTHERWISE SPECIFIED DIMENSION IN INCHES. TOLERANCES

DECIMALS	ANGLES
.XXX = .005 .XX = .02 .X = .1	±0° 30'

REMOVE BURRS AND BREAK SHARP CORNERS SURFACE QUALITY ✓

MATERIAL —/—

FINISH —/—

DRN. M Pierce	DATE 11/7/70	digital EQUIPMENT CORPORATION MAYNARD, MASSACHUSETTS
CHK.	DATE 2/23/73	
ENG.	DATE 2/23/73	TITLE DATA PATHS (DPF)
PROJ. ENG.	DATE 2/23/73	
PROD.	DATE 2/23/73	

NEXT HIGHER ASSY. 13-DD-KD11-B

SCALE —/—

SHEET 9 OF

SIZE	CODE	NUMBER	REV.
D	CS	M7269-Ø-1	M

DIST.

REVISIONS: REV | CHANGE NO. | CHK

DEC FORM NO DRD 102-B

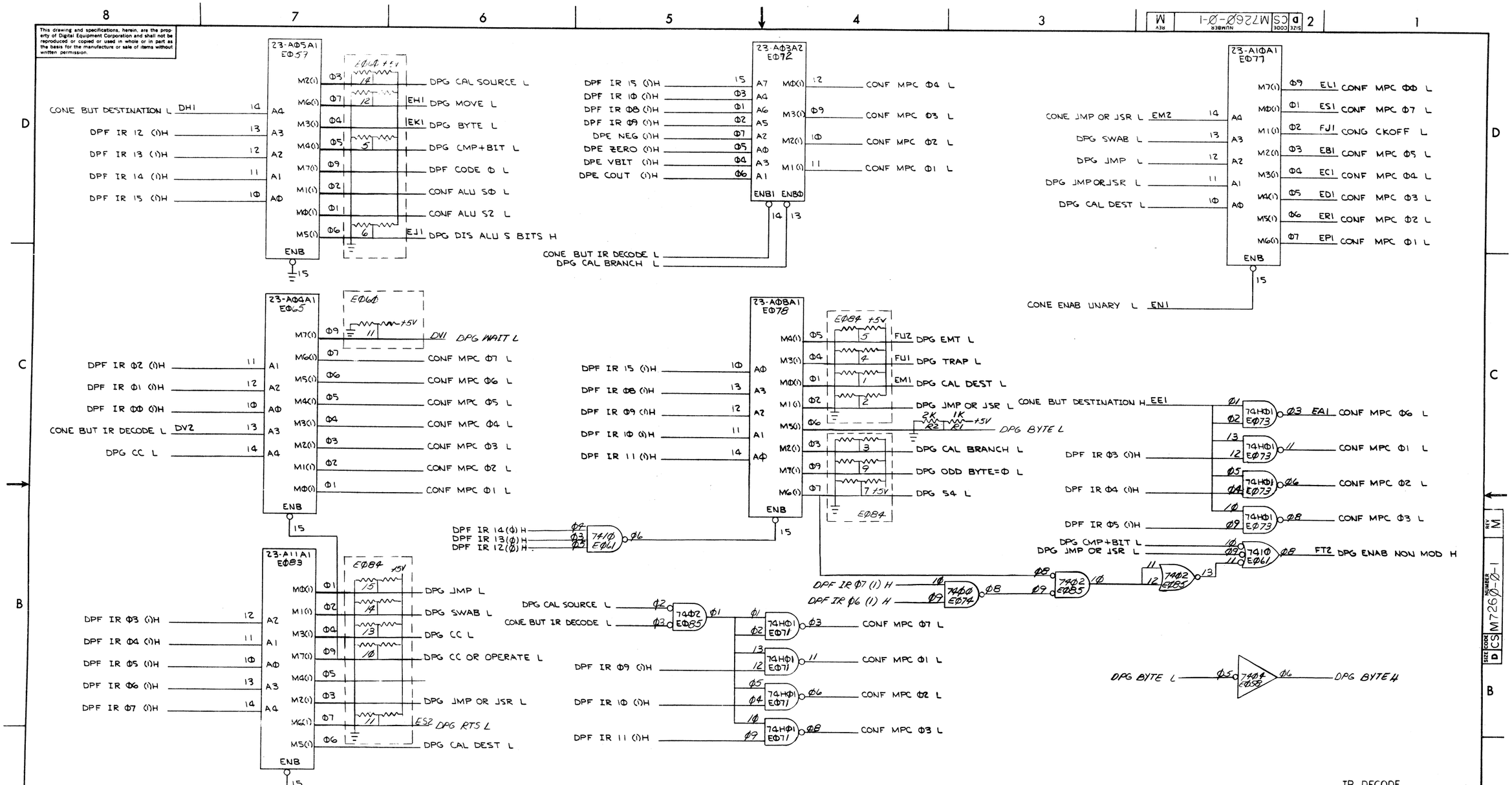

FIRST USED ON OPTION/MODEL	QTY.	DESCRIPTION	PART NO.	ITEM NO.
11/Ø5		PARTS LIST		

UNLESS OTHERWISE SPECIFIED DIMENSION IN INCHES. TOLERANCES

DECIMALS	ANGLES
.XXX = .005	±0° 30'
.XX = .02	
.X = .1	

REMOVE BURRS AND BREAK SHARP CORNERS SURFACE QUALITY ✓

MATERIAL

FINISH

DRN. J. Rizzo DATE 11/72
CHK'D DATE
ENG. DATE
PROJ. ENG. DATE
PROD. DATE

NEXT HIGHER ASSY. B-DD-KD11-B

SCALE

SHEET 10 OF

digital EQUIPMENT CORPORATION MAYNARD, MASSACHUSETTS

TITLE IR DECODE

DATA PATHS

(DPG)

SIZE	CODE	NUMBER	REV.
D	CS	M726Ø-Ø-1	M

DIST.

REVISIONS | CHANGE NO. | REV | CHK

DEC FORM NO. DRD 102-B

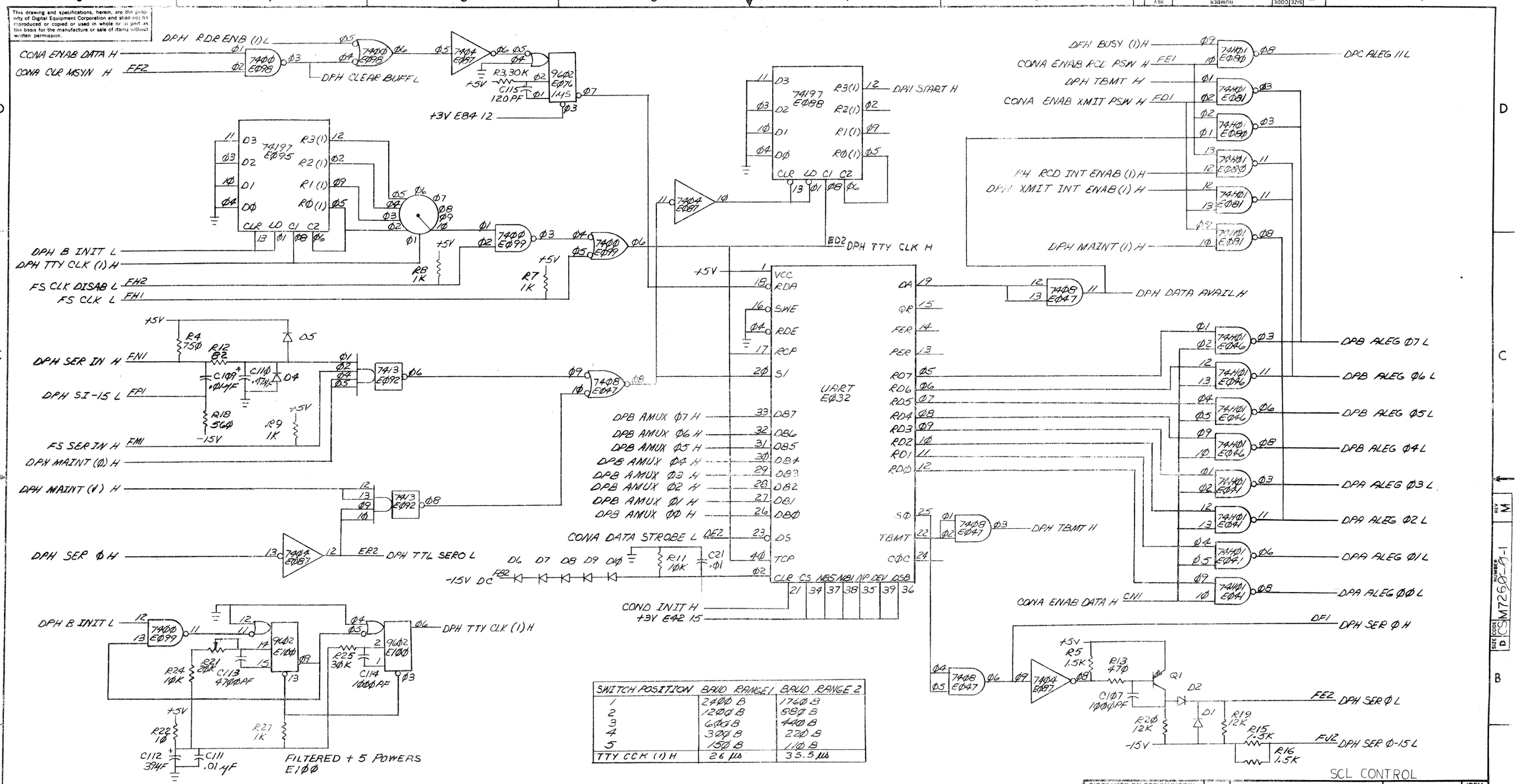

SWITCH POSITION	BAUD RANGE 1	BAUD RANGE 2
1	2400 B	1760 B
2	1200 B	880 B
3	600 B	440 B
4	300 B	220 B
5	150 B	110 B
TTY CCK (1) H	26 μs	35.5 μs

FIRST USED ON OPTION/MODEL	QTY.	DESCRIPTION	PART NO.	ITEM NO.
11/05		PARTS LIST		

UNLESS OTHERWISE SPECIFIED DIMENSION IN INCHES. TOLERANCES

DECIMALS	ANGLES
.XXX = .005	±0° 30'
.XX = .02	
.X = .1	

REMOVE BURRS AND BREAK SHARP CORNERS SURFACE QUALITY

MATERIAL

FINISH

DRN M. Pline DATE 11/30/72
CHKD DATE 2/23/73
ENG DATE 2/23/73
PROJ ENG DATE 2/23/73
PROG DATE 2/26/73

NEXT HIGHER ASSY B-DD KD11-8

SCALE

SHEET OF

digital EQUIPMENT CORPORATION MAYNARD MASSACHUSETTS

TITLE DATA PATH (DPH)

SIZE	CODE	NUMBER	REV.
D	CS	M7260-0-1	M

DIST.

REV	REVISIONS	CHANGE NO	CHK

BRUNING 40-522 15840

DEC FORM NO ORD 102-B

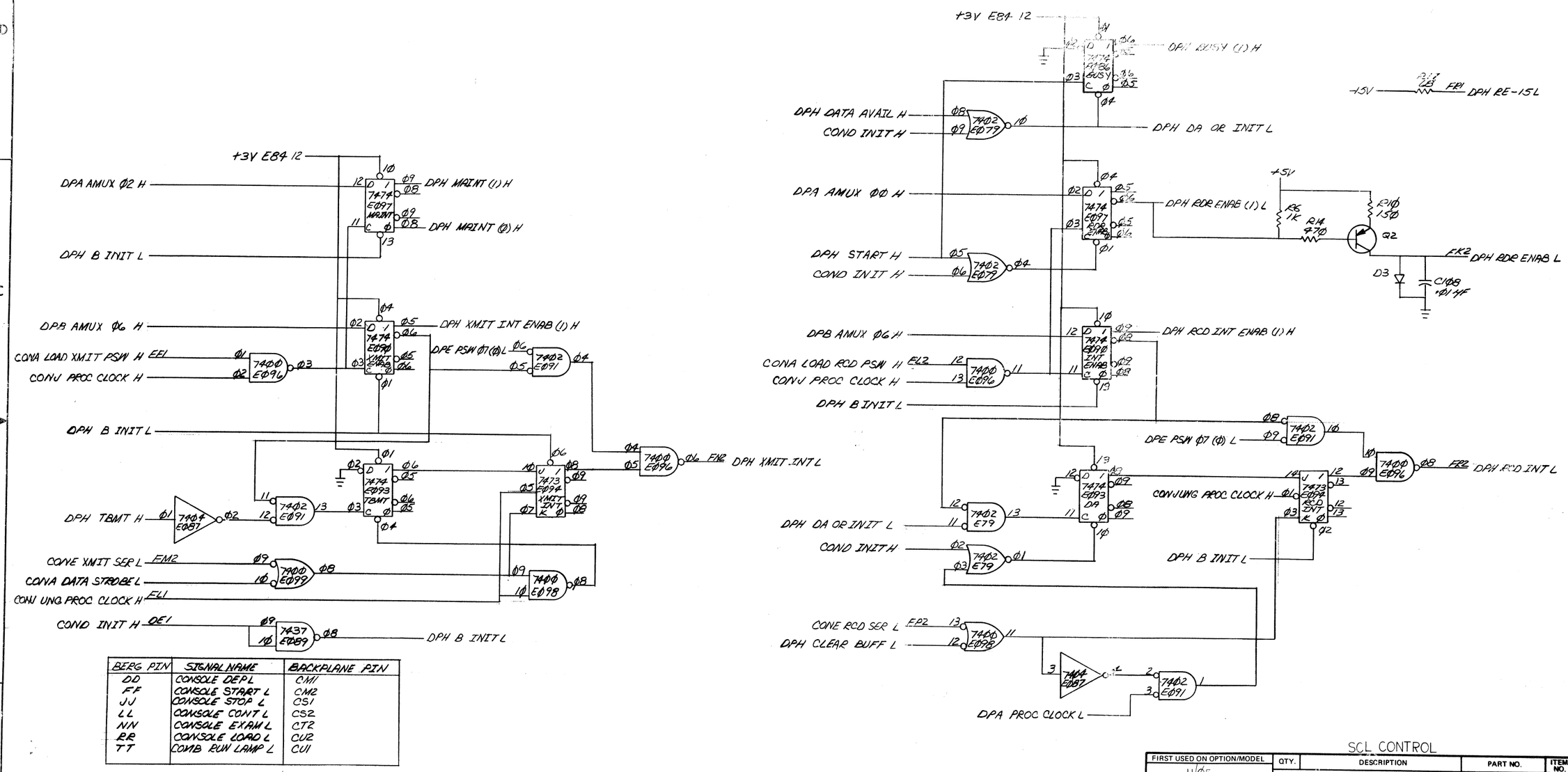

BERG PIN	SIGNAL NAME	BACKPLANE PIN
DD	CONSOLE DEP L	CM1
FF	CONSOLE START L	CM2
JJ	CONSOLE STOP L	CS1
LL	CONSOLE CONT L	CS2
NN	CONSOLE EXAM L	CT2
RR	CONSOLE LOAD L	CU2
TT	CONB RUN LAMP L	CU1

SCL CONTROL

FIRST USED ON OPTION/MODEL	QTY.	DESCRIPTION	PART NO.	ITEM NO.
11/Ø5		PARTS LIST		

UNLESS OTHERWISE SPECIFIED DIMENSION IN INCHES. TOLERANCES

DECIMALS	ANGLES
.XXX = .005 .XX = .02 .X = .1	±0° 30'

REMOVE BURRS AND BREAK SHARP CORNERS SURFACE QUALITY ✓

MATERIAL —/—

FINISH —/—

DRN. J. Reiss DATE 11/30/72
CHK'D DATE 2/21/73
ENG. DATE 2/23/73
PROJ. ENG. DATE 2/23/73
PROD. DATE 2/23/73

NEXT HIGHER ASSY. B-DD-KD11-B

SCALE —/—

SHEET 12 OF

digital EQUIPMENT CORPORATION MAYNARD MASSACHUSETTS

TITLE DATA PATH (DPHI)

SIZE	CODE	NUMBER	REV.
D	CS	M7260-Ø-1	M

DIST.

REVISIONS: REV. / CHANGE NO. / CHK

BRUNING 40-522 15840

DEC FORM NO DRD 102-B

THIS FACE SHEET CONTAINS THE FOLLOWING CHIP PART NUMBERS

PART NUMBER

23-AØ1A1

23-AØ2A1

23-AØ3A1

23-AØ4A1

23-AØ5A1

23-AØ6A1

23-AØ8A1

23-A1ØA1

23-A11A1

23-A12A1

23-AØ3A2

FIRST USED ON OPTION MODEL	QTY.	DESCRIPTION	PART NO.	ITEM NO.
KDII-B		PARTS LIST		

DRN. C. Teschner	DATE 5-8-72	digital EQUIPMENT CORPORATION MAYNARD, MASSACHUSETTS
CHK'D. M. Tikk	DATE 5-15-72	TITLE
ENG.	DATE	DATA PATH ROM PATTERNS
PROJ. ENG.	DATE	
PROD.	DATE	
NEXT HIGHER ASSEMBLY B-DD-KDII-B		SIZE K / CODE RL / NUMBER M726Ø-Ø-8 / REV.
SCALE —		
SHEET 1 OF 15		DIST.

REVISIONS: REV. / CHANGE NO. / CHK

DEC FORM NO. DRB 109

```
                        /( =Y8 (PIN #9) DPA ALEG 02 L
                        */( =Y7 (PIN #7) DPA ALEG 03 L
                        **/( =Y6 (PIN #6) DPA ALEG 00 L
                        ***/( =Y5 (PIN #5) DPA ALEG 01 L
                        ****/( =Y4 (PIN #4) DPB ALEG 05 L
                        *****/( =Y3 (PIN #3) DBP ALEG 04 L
                        ******/( =Y2 (PIN #2) DPB ALEG 06 L
                        *******/( =Y1 (PIN #1) DPB ALEG 07 L
 OCTAL DECIMAL                  ********        OCTAL
ADDRESS ADDRESS   EDCBA         ********        DATA
   000      0     00000        11111111        377
   001      1     00001        01001110        116      K=207 SWR ADDRESS 1.E. 177570=000207.BAR
   002      2     00010        01110011        163      K=64 RECVR. VECTOR
   003      3     00011        00001111        017      K=360 CONDITION CODE MASK (CCM=1)
   004      4     00100        10111011        273      K=30 EMT VECTOR
   005      5     00101        00111111        077      K=14 T BIT VECTOR
   006      6     00110        11111111        377
   007      7     00111        11111111        377
   010      8     01000        11111011        373      K=20 IOT VECTOR
   011      9     01001        00111011        073      K=34 TRAP VECTOR
   012     10     01010        11111111        377
   013     11     01011        11111111        377
   014     12     01100        10111111        277      K=10 RESERVED (ILLEGAL) INSTRUCTION VECTOR
   015     13     01101        01111111        177      K=4 BUS ERROR OR STACK OVERFLOW ERROR
   016     14     01110        11111111        377
   017     15     01111        11111111        377
   020     16     10000        01111011        173      K=24 PWR FAIL VECTOR
   021     17     10001        11111111        377
   022     18     10010        11111101        375      K=100 LCLK INT VECTOR
   023     19     10011        11111111        377
   024     20     10100        11111111        377
   025     21     10101        11111111        377
   026     22     10110        11111111        377
   027     23     10111        11111111        377
   030     24     11000        11111111        377
   031     25     11001        11111111        377
   032     26     11010        11111111        377
   033     27     11011        11111111        377
   034     28     11100        11111111        377
   035     29     11101        11110011        363      K=60 TRANSMIT VECTOR
   036     30     11110        11111111        377
   037     31     11111        11111111        377
                  *****
                  ****/( A(PIN #10) IS  CONG SP WRITE H
                  ***/( B(PIN #11) IS  CONG ROM SPA 00 H
                  **/( C(PIN #12) IS  CONG ROM SPA 01 H
                  */( D(PIN #13) IS  CONG ROM SPA 02 H
                  /( E(PIN #14) IS  CONG ROM SPA 03 H
```



```
                        /( =Y8 (PIN #9) DPF DISAB V BIT ROM H
                        */( =Y7 (PIN #7) CONF ALU S3 L
                        **/( =Y6 (PIN #6) CONF ALU S2 L
                        ***/( =Y5 (PIN #5) CONF ALU S1 L
                        ****/( =Y4 (PIN #4) CONF ALU S0 L
                        *****/( =Y3 (PIN #3) CONF ALU MODE H
                        ******/( =Y2 (PIN #2) CONF CIN H
                        *******/( =Y1 (PIN #1) DPF C CLK L
 OCTAL DECIMAL                  ********        OCTAL
ADDRESS ADDRESS   EDCBA         ********        DATA
   000      0     00000        11111111        377
   001      1     00001        10000101        205      MOV F=A
   002      2     00010        01001010        112      CMP F=A MINUS B MINUS 1
   003      3     00011        10001101        215      BIT F=AB
   004      4     00100        10111101        275      BIC F=A,BARB
   005      5     00101        10100101        245      BIS F=A+B
   006      6     00110        00110000        060      ADD F=A PLUS B
   007      7     00111        11111111        377      RI (RESERVED INSTRUCTION)
   010      8     01000        11111111        377      RI
   011      9     01001        10000101        205      MOV(B)
   012     10     01010        01001010        112      CMP(B)
   013     11     01011        10001101        215      BIT(B)
   014     12     01100        10111101        275      BIC(B)
   015     13     01101        10100101        245      BIS(B)
   016     14     01110        00110010        062      SUB F=A PLUS B
   017     15     01111        11111111        377      RI
   020     16     10000        00000000        000      NOT ACCESSED
   021     17     10001        00000000        000      MOV - NOT ACCESSED
   022     18     10010        00000000        000      CMP - NOT ACCESSED
   023     19     10011        00000000        000      BIT - NOT ACCESSED
   024     20     10100        00000000        000      BIC - NOT ACCESSED
   025     21     10101        00000000        000      BIS - NOT ACCESSED
   026     22     10110        00000000        000      ADD - NOT ACCESSED
   027     23     10111        00000000        000      RI - NOT ACCESSED
   030     24     11000        00000000        000      RI - NOT ACCESSED
   031     25     11001        00000000        000      MOV(B) - NOT ACCESSED
   032     26     11010        00000000        000      CMP(B) - NOT ACCESSED
   033     27     11011        00000000        000      BIT(B) - NOT ACCESSED
   034     28     11100        00000000        000      BIC(B) - NOT ACCESSED
   035     29     11101        00000000        000      BIS(B) - NOT ACCESSED
   036     30     11110        00000000        000      SUB - NOT ACCESSED
   037     31     11111        00000000        000      RI - NOT ACCESSED
                  *****
                  ****/( A(PIN #10) IS  DPF IR 12 (1)H
                  ***/( B(PIN #11) IS  DPF IR 13 (1)H
                  **/( C(PIN #12) IS  DPF IR 14 (1)H
                  */( D(PIN #13) IS  DPF IR 15 (1)H
                  /( E(PIN #14) IS  DPA RUN GND L
```

```
                                /( =Y8 (PIN #9) DPF COP L
                                */( =Y7 (PIN #7) DPF C CLK L
                                **/( =Y6 (PIN #6) CONF CIN H
                                ***/( =Y5 (PIN #5) CONF ALU MODE H
                                ****/( =Y4 (PIN #4) CONF ALU S0 L
                                *****/( =Y3 (PIN #3) CONF ALU S1 L
                                ******/( =Y2 (PIN #2) CONF ALU S2 L
                                *******/( =Y1 (PIN #1) CONF ALU S3 L
 OCTAL DECIMAL                  ********        OCTAL
ADDRESS ADDRESS     EDCBA       ********        DATA
   000      0      00000       11111111        377
   001      1      00001       11111111        377
   002      2      00010       10011100        234        CLR ALUF=ZERO
   003      3      00011       10101001        251        NEG CIN ALUF=A MINUS B MINUS 1
   004      4      00100       10111111        277        ROR
   005      5      00101       11111111        377
   006      6      00110       11111111        377
   007      7      00111       11111111        377
   010      8      01000       11111111        377
   011      9      01001       11111111        377
   012     10      01010       11100000        340        INC CIN ALUF=A ARITH
   013     11      01011       00101111        057        SBC CIN ALUF=A MINUS 1
   014     12      01100       10110111        267        ASR
   015     13      01101       11111111        377
   016     14      01110       11111111        377
   017     15      01111       11111111        377
   020     16      10000       11111111        377
   021     17      10001       11111111        377
   022     18      10010       10010101        225        COM ALUF=NOT B
   023     19      10011       00000000        000        ADC CIN ALUF=A ARITH
   024     20      10100       10111011        273        ROL
   025     21      10101       11111111        377
   026     22      10110       11111111        377
   027     23      10111       11111111        377
   030     24      11000       10011010        232        SWAB NOT B CLOCK LOW
   031     25      11001       11111111        377
   032     26      11010       11001111        317        DEC CIN ALUF=A MINUS 1
   033     27      11011       10010000        220        TST ALUF=AL
   034     28      11100       10110011        263        ASL
   035     29      11101       11111111        377
   036     30      11110       11111111        377
   037     31      11111       11111111        377
                   *****
                   ****/( A(PIN #10) IS  DPF IR 08 (1)H
                   ***/( B(PIN #11) IS  DPR IR 09 (1)H
                   **/( C(PIN #12) IS  DPF IR 10 (1)H
                   */( D(PIN #13) IS  DPF IR 07 (1)H
                   /( E(PIN #14) IS  DPF IR 06 (1)H
```



```
                                /( =Y8 (PIN #9) DPG WAIT L
                                */( =Y7 (PIN #7) CONF MPC 07 L
                                **/( =Y6 (PIN #6) CONF MPC 06 L
                                ***/( =Y5 (PIN #5) CONF MPC 05 L
                                ****/( =Y4 (PIN #4) CONF MPC 04 L
                                *****/( =Y3 (PIN #3) CONF MPC 03 L
                                ******/( =Y2 (PIN #2) CONF MPC 02 L
                                *******/( =Y1 (PIN #1) CONF MPC 01 L
 OCTAL DECIMAL                  ********        OCTAL
ADDRESS ADDRESS     EDCBA       ********        DATA
   000      0      00000       11001011        313        CC OPR
   001      1      00001       11001011        313        CC OPR
   002      2      00010       11001011        313        CC OPR
   003      3      00011       11001011        313        CC OPR
   004      4      00100       11001011        313        CC OPR
   005      5      00101       11001011        313        CC OPR
   006      6      00110       11001011        313        CC OPR
   007      7      00111       11001011        313        CC OPR
   010      8      01000       11111111        377        RI (RESERVED INSTRUCTION)
   011      9      01001       11111111        377        NOT ACCESSED FOR NOT IR DECODE
   012     10      01010       11111111        377        RI
   013     11      01011       11111111        377        RI
   014     12      01100       11111111        377        RI
   015     13      01101       11111111        377        RI
   016     14      01110       11111111        377        RI
   017     15      01111       11111111        377        RI
   020     16      10000       11101111        357        HALT,BUT IR DEC
   021     17      10001       01100110        146        WAIT,BUT IR DEC
   022     18      10010       10100010        242        IOT
   023     19      10011       10001000        210        RESET
   024     20      10100       10110100        264        RTI
   025     21      10101       11101101        355        BREAKPOINT TRAP DECODE
   026     22      10110       11111111        377        RI
   027     23      10111       11111111        377        RI
   030     24      11000       11111111        377        RI
   031     25      11001       01111111        177        WAIT,BUT IR DEC,BAR
   032     26      11010       11111111        377        RI
   033     27      11011       11111111        377        RI
   034     28      11100       11111111        377        RI
   035     29      11101       11111111        377        RI
   036     30      11110       11111111        377        RI
   037     31      11111       11111111        377        RI
                   *****
                   ****/( A(PIN #10) IS  DPF IR 00 (1)H
                   ***/( B(PIN #11) IS  DPF IR 02 (1)H
                   **/( C(PIN #12) IS  DPF IR 01 (1)H
                   */( D(PIN #13) IS  CONE BUT IR DECODE L
                   /( E(PIN #14) IS  DPG CC L
```

```
/( =Y8 (PIN #9) DPF CODE 0 L
*/( =Y7 (PIN #7) DPG MOVE L
**/( =Y6 (PIN #6) DPG DIS ALU S BITS H
***/( =Y5 (PIN #5) DPG CMP OR BIT L
****/( =Y4 (PIN #4) DPG BYTE L
*****/( =Y3 (PIN #3) DPG CAL SOURCE L
******/( =Y2 (PIN #2) CONF ALU S0 L
*******/( =Y1 (PIN #1) CONF ALU S2 L
```

OCTAL ADDRESS	DECIMAL ADDRESS	EDCBA	********	OCTAL DATA	
000	0	00000	11011111	337	BR/CC (BRANCH OR CC OPERATOR)
001	1	00001	11011111	337	BR/CC
002	2	00010	11011011	333	BIC
003	3	00011	11010011	323	BIC(B)
004	4	00100	11001011	313	CMP
005	5	00101	11000011	303	CMP(B)
006	6	00110	01011011	133	ADD
007	7	00111	01111000	170	SUB DIS ALU BITS H
010	8	01000	10011011	233	MOV
011	9	01001	10010011	223	MOV(B)
012	10	01010	11011011	333	BIS
013	11	01011	11010011	323	BIS(B)
014	12	01100	11001011	313	BIT
015	13	01101	11000011	303	BIT(B)
016	14	01110	11011111	337	RI TRAP
017	15	01111	11011111	337	RI TRAP
020	16	10000	11011111	337	BR/CC
021	17	10001	11011111	337	BR/CC
022	18	10010	11011011	333	BIC
023	19	10011	11010011	323	BIC(B)
024	20	10100	11001011	313	CMP
025	21	10101	11000011	303	CMP(B)
026	22	10110	01011011	133	ADD
027	23	10111	01011011	133	ADD
030	24	11000	10011011	233	MOV
031	25	11001	10010011	223	MOV(B)
032	26	11010	11011011	333	BIS
033	27	11011	11010011	323	BIS(B)
034	28	11100	11001011	313	BIT
035	29	11101	11000011	303	BIT(B)
036	30	11110	11011111	337	RI TRAP
037	31	11111	11011111	337	RI TRAP

```
*****
****/( A(PIN #10) IS  DPF IR 15 (1)H
***/( B(PIN #11) IS  DPF IR 14 (1)H
**/( C(PIN #12) IS  DPF IR 13 (1)H
*/( D(PIN #13) IS  DPF IR 12 (1)H
/( E(PIN #14) IS  CONE BUT DESTINATION L
```



```
/( =Y8 (PIN #9) DPF DISAB V BIT ROM H
*/( =Y7 (PIN #7) DPF CODE 1 L
**/( =Y6 (PIN #6) CONG ROM ALEG 0 L
***/( =Y5 (PIN #5) CONG B MODE 00 H
****/( =Y4 (PIN #4) DPF CODE 0 L
*****/( =Y3 (PIN #3) DPF SET CARRY L
******/( =Y2 (PIN #2) DPF ROTATE L
*******/( =Y1 (PIN #1) DPG BYTE L
```

OCTAL ADDRESS	DECIMAL ADDRESS	EDCBA	********	OCTAL DATA	
000	0	00000	11111111	377	
001	1	00001	11111111	377	
002	2	00010	11111111	377	
003	3	00011	10110110	266	SWAB DISAB V BIT ROM
004	4	00100	11110101	365	ROR
005	5	00101	11110101	365	ASR
006	6	00110	11100101	345	ROL
007	7	00111	11100101	345	ASL
010	8	01000	10110111	267	CLR
011	9	01001	00110111	067	INC
012	10	01010	11110011	363	COM
013	11	01011	00111111	077	DEC
014	12	01100	00000001	001	BCC
015	13	01101	11111111	377	
016	14	01110	11111111	377	
017	15	01111	11111111	377	
020	16	10000	00000001	001	BMI
021	17	10001	11111111	377	
022	18	10010	11111111	377	
023	19	10011	11111111	377	
024	20	10100	00000001	001	BVS
025	21	10101	11111111	377	
026	22	10110	11111111	377	
027	23	10111	11111111	377	
030	24	11000	01011111	137	NEG
031	25	11001	00111111	077	SBC
032	26	11010	00110111	067	ADC
033	27	11011	11110111	367	TST
034	28	11100	11111111	377	
035	29	11101	11111111	377	
036	30	11110	11111111	377	
037	31	11111	11111111	377	

```
*****
****/( A(PIN #10) IS  DPF IR 07 (1)H
***/( B(PIN #11) IS  DPF IR 06 (1)H
**/( C(PIN #12) IS  DPF IR 10 (1)H
*/( D(PIN #13) IS  DPF IR 09 (1)H
/( E(PIN #14) IS  DPF IR 08 (1)H
```

```
                                  /( *Y8 (PIN #9) DPG ODD BYTE *  0L
                                  */( *Y7 (PIN #7) DPG 54 L
                                  **/( *Y6 (PIN #6) DPG BYTE L
                                  ***/( *Y5 (PIN #5) DPG EMT L
                                  ****/( *Y4 (PIN #4) DPG TRAP L
                                  *****/( *Y3 (PIN #3) DPG CAL BRANCH L
                                  ******/( *Y2 (PIN #2) DPG JSR L
                                  *******/( *Y1 (PIN #1) DPG CAL DEST L
 OCTAL DECIMAL                    ********          OCTAL
ADDRESS ADDRESS    EDCBA          ********          DATA
   000      0      00000          01111111          177
   001      1      00001          11111011          373        BPL
   002      2      00010          11111011          373        BGE
   003      3      00011          11111011          373        BVC
   004      4      00100          11111011          373        BNE
   005      5      00101          11111011          373        BHI
   006      6      00110          11111011          373        BGT
   007      7      00111          11111011          373        BCC
   010      8      01000          11111011          373        BR
   011      9      01001          11111011          373        BMI
   012     10      01010          11111011          373        BLT
   013     11      01011          11111011          373        BVS
   014     12      01100          11111011          373        BEQ
   015     13      01101          11111011          373        BLOS
   016     14      01110          11111011          373        BLE
   017     15      01111          11111011          373        BCS
   020     16      10000          11111100          374        JSR
   021     17      10001          11101111          357        EMT
   022     18      10010          11111110          376        SOP (CC) ROR/ROL/ASR/ASL
   023     19      10011          11011110          336        OPR (DST) ROR(B)/ROL(B)/ASR(B)/ASL(B)
   024     20      10100          11111110          376        SOP (CC) CLR/COM/INC/DEC
   025     21      10101          11011110          336        OPR(DST) CLR(B)/COM(B)/INC(B)/DEC(B)
   026     22      10110          11111111          377        RI RESERVED INST
   027     23      10111          11111111          377        RI RESERVED INST
   030     24      11000          11111100          374        JSR
   031     25      11001          11110111          367        TRAP
   032     26      11010          11111111          377        RI RESERVED INST
   033     27      11011          11111111          377        RI RESERVED INST
   034     28      11100          10111110          276        SOP NEG/ADC/SBC/TST
   035     29      11101          10011110          236        OPR(DST) NEG(B)/ADC(B)/SBC(B)/TST(B)
   036     30      11110          11111111          377        RI RESERVED INST
   037     31      11111          11111111          377        RI RESERVED INST
                   *****
                   ****/( A(PIN #10) IS  DPF IR 15 (1)H
                   ***/( B(PIN #11) IS  DPF IR 10 (1)H
                   **/( C(PIN #12) IS  DPF IR 09 (1)H
                   */( D(PIN #13) IS  DPF IR 08 (1)H
                   /( E(PIN #14) IS  DPF IR 11 (1)H
```



```
                                  /( *Y8 (PIN #9) CONF MPC 00 L
                                  */( *Y7 (PIN #7) CONF MPC 01 L
                                  **/( *Y6 (PIN #6) CONF MPC 02 L
                                  ***/( *Y5 (PIN #5) CONF MPC 03 L
                                  ****/( *Y4 (PIN #4) CONF MPC 04 L
                                  *****/( *Y3 (PIN #3) CONF MPC 05 L
                                  ******/( *Y2 (PIN #2) CONG CKOFF L
                                  *******/( *Y1 (PIN #1) CONF MPC 07 L
 OCTAL DECIMAL                    ********          OCTAL
ADDRESS ADDRESS    EDCBA          ********          DATA
   000      0      00000          11111111          377
   001      1      00001          11111111          377
   002      2      00010          11111111          377
   003      3      00011          11111111          377
   004      4      00100          11111111          377
   005      5      00101          11111111          377
   006      6      00110          11111111          377
   007      7      00111          11111111          377
   010      8      01000          11011111          337        JMP BADR TO J=1 @204
   011      9      01001          11111111          377
   012     10      01010          11011111          337        JMP BADR TO J=1 @204
   013     11      01011          11111111          377
   014     12      01100          10101111          257        JSR BADR TO J2=1 @ 212
   015     13      01101          11111111          377
   016     14      01110          11111111          377        NOT JMP OR JSR FALL THRU TO D1=2 @ 200
   017     15      01111          11111111          377
   020     16      10000          11111111          377
   021     17      10001          11111111          377
   022     18      10010          11111111          377
   023     19      10011          11111111          377
   024     20      10100          11111111          377
   025     21      10101          11111111          377
   026     22      10110          11010111          327        SWAB BADR 024 INOR NEXT
   027     23      10111          11111111          377
   030     24      11000          01101111          157        JMP BADR 011 INOR NEXT
   031     25      11001          11111111          377
   032     26      11010          01101111          157        JMP BADR 011 INOR NEXT
   033     27      11011          11111111          377
   034     28      11100          01101111          157        JSR BADR 011 INOR NEXT
   035     29      11101          11111111          377
   036     30      11110          11101110          356        SOP BADR 210 INOR NXT
   037     31      11111          11110101          365        UNARY AND NOT JMP,JSR,SWAB
                   *****
                   ****/( A(PIN #10) IS  DPG CAL DEST L
                   ***/( B(PIN #11) IS  DPG JMP L OR JSR L
                   **/( C(PIN #12) IS  DPG JMP L
                   */( D(PIN #13) IS  DPG SWAB L
                   /( E(PIN #14) IS  CONG JMP OR JSR L
```

```
                                /( =Y8 (PIN #9) DPG CC OR OPERATE L
                                */( =Y7 (PIN #7) DPG RTS L
                                **/( =Y6 (PIN #6) DPG CAL DEST L
                                ***/( =Y5 (PIN #5)
                                ****/( =Y4 (PIN #4) DPG CC L
                                *****/( =Y3 (PIN #3) DPG JMP L OR JSR L
                                ******/( =Y2 (PIN #2) DPG SWAB L
                                *******/( =Y1 (PIN #1) DPG JMP L
 OCTAL DECIMAL                  ********        OCTAL
ADDRESS ADDRESS   EDCBA         ********        DATA
   000      0     00000         01111111        177       OPR(HALT/WAIT/RTI/BK/IOT/TR)
   001      1     00001         11111111        377       RI
   002      2     00010         11111111        377       RI
   003      3     00011         11111111        377       RI
   004      4     00100         11111111        377       RI
   005      5     00101         11111111        377       RI
   006      6     00110         11111111        377       RI
   007      7     00111         11111111        377       RI
   010      8     01000         11011010        332       JMP MODE 0
   011      9     01001         11011010        332       JMP MODE 4
   012     10     01010         11011010        332       JMP MODE 2
   013     11     01011         11011010        332       JMP MODE 6
   014     12     01100         11011010        332       JMP MODE 1
   015     13     01101         11011010        332       JMP MODE 5
   016     14     01110         11011010        332       JMP MODE 3
   017     15     01111         11011010        332       JMP MODE 7
   020     16     10000         10111111        277       RTS NOT DPG CC OR OPR L
   021     17     10001         01110111        167       CC OPR 240
   022     18     10010         11111111        377       RI
   023     19     10011         01110111        167       CC OPR 260
   024     20     10100         11111111        377       RI
   025     21     10101         01110111        167       CC OPR 240
   026     22     10110         11111111        377       RI
   027     23     10111         01110111        167       CC OPR 260
   030     24     11000         11011101        335       SWAB MODE 0
   031     25     11001         11011101        335       SWAB MODE 4
   032     26     11010         11011101        335       SWAB MODE 2
   033     27     11011         11011101        335       SWAB MODE 6
   034     28     11100         11011101        335       SWAB MODE 1
   035     29     11101         11011101        335       SWAB MODE 5
   036     30     11110         11011101        335       SWAB MODE 3
   037     31     11111         11011101        335       SWAB MODE 7
                  *****
                  ****/( A(PIN #10) IS  DPF IR 05 (1)H
                  ***/( B(PIN #11) IS  DPF IR 04 (1)H
                  **/( C(PIN #12) IS  DPF IR 03 (1)H
                  */( D(PIN #13) IS  DPF IR 06 (1)H
                  /( E(PIN #14) IS  DPF IR 07 (1)H
```



```
                                /( =Y8 (PIN #9)
                                */( =Y7 (PIN #7) DPF SET V L
                                **/( =Y6 (PIN #6) DPF SET COUT L
                                ***/( =Y5 (PIN #5)
                                ****/( =Y4 (PIN #4)
                                *****/( =Y3 (PIN #3)
                                ******/( =Y2 (PIN #2)
                                *******/( =Y1 (PIN #1)
 OCTAL DECIMAL                  ********        OCTAL
ADDRESS ADDRESS   EDCBA         ********        DATA
   000      0     00000         11011111        337       INC OR ADC
   001      1     00001         10011111        237       ADD OR SUB
   002      2     00010         10111111        277       DEC OR SBC
   003      3     00011         11111111        377       CMP OR NEG
   004      4     00100         11111111        377       INC OR ADC
   005      5     00101         11011111        337       ADD OR SUB
   006      6     00110         11111111        377       DEC OR SBC
   007      7     00111         11011111        337       CMP OR NEG
   010      8     01000         11111111        377       INC OR ADC
   011      9     01001         11011111        337       ADD OR SUB
   012     10     01010         11111111        377       DEC OR SBC
   013     11     01011         11011111        337       CMP OR NEG
   014     12     01100         10111111        277       INC OR ADC
   015     13     01101         11111111        377       ADD OR SUB
   016     14     01110         11011111        337       DEC OR SBC
   017     15     01111         10011111        237       CMP OR NEG
   020     16     10000         11011111        337       INC OR ADC
   021     17     10001         11011111        337       ADD OR SUB
   022     18     10010         10111111        277       DEC OR SBC
   023     19     10011         10111111        277       CMP OR NEG
   024     20     10100         11111111        377       INC OR ADC
   025     21     10101         11111111        377       ADD OR SUB
   026     22     10110         11111111        377       DEC OR SBC
   027     23     10111         11111111        377       CMP OR NEG
   030     24     11000         11111111        377       INC OR ADC
   031     25     11001         11111111        377       ADD OR SUB
   032     26     11010         11111111        377       DEC OR SBC
   033     27     11011         11111111        377       CMP OR NEG
   034     28     11100         10111111        277       INC OR ADC
   035     29     11101         10111111        277       ADD OR SUB
   036     30     11110         11011111        337       DEC OR SBC
   037     31     11111         11011111        337       CMP OR NEG
                  *****
                  ****/( A(PIN #10) IS  DPF CODE 1 DEL (1)L
                  ***/( B(PIN #11) IS  DPF CODE 0 DEL (1)L
                  **/( C(PIN #12) IS  DPE NEG DEL (1)H
                  */( D(PIN #13) IS  DPD ALEG 15 DEL (1)L
                  /( E(PIN #14) IS  DPD BLEG 15 DEL (1)L
```

```
                                    /( =Y4 (PIN # 9) CONF MPC 03 L
                                    +/( =Y3 (PIN #10) CONF MPC 02 L
                                    ++/( =Y2 (PIN #11) CONF MPC 01 L
                                    +++/( =Y1 (PIN #12) CONF MPC 04 L
  OCTAL DECIMAL                     ++++        OCTAL
ADDRESS ADDRESS   HGFEDCBA          ++++        DATA
   000       0    00000000          1111        017
   001       1    00000001          1111        017
   002       2    00000010          1111        017
   003       3    00000011          1111        017
   004       4    00000100          1111        017
   005       5    00000101          1111        017
   006       6    00000110          1111        017
   007       7    00000111          1111        017
   010       8    00001000          1111        017
   011       9    00001001          1111        017
   012      10    00001010          1111        017
   013      11    00001011          1111        017
   014      12    00001100          1111        017
   015      13    00001101          1111        017        NOT ACCESSED
   016      14    00001110          1111        017
   017      15    00001111          1111        017        ************
   020      16    00010000          0011        003
   021      17    00010001          0011        003
   022      18    00010010          0011        003
   023      19    00010011          0011        003
   024      20    00010100          0101        005
   025      21    00010101          0101        005
   026      22    00010110          0101        005
   027      23    00010111          0101        005
   030      24    00011000          0101        005
   031      25    00011001          0101        005
   032      26    00011010          0101        005
   033      27    00011011          0101        005
   034      28    00011100          0011        003
   035      29    00011101          0011        003        BGE
   036      30    00011110          0011        003
   037      31    00011111          0011        003        ************

   040      32    00100000          0011        003
   041      33    00100001          0101        005
   042      34    00100010          0011        003
   043      35    00100011          0101        005
   044      36    00100100          0011        003
   045      37    00100101          0101        005
   046      38    00100110          0011        003
   047      39    00100111          0101        005
   050      40    00101000          0011        003
   051      41    00101001          0101        005
   052      42    00101010          0011        003
   053      43    00101011          0101        005
   054      44    00101100          0011        003
   055      45    00101101          0101        005        BNE
   056      46    00101110          0011        003
   057      47    00101111          0101        005        ************
   060      48    00110000          0011        003
   061      49    00110001          0101        005
   062      50    00110010          0011        003
   063      51    00110011          0101        005
   064      52    00110100          0101        005
   065      53    00110101          0101        005
   066      54    00110110          0101        005
   067      55    00110111          0101        005
   070      56    00111000          0101        005
   071      57    00111001          0101        005
   072      58    00111010          0101        005
   073      59    00111011          0101        005
   074      60    00111100          0011        003
   075      61    00111101          0101        005        BGT
   076      62    00111110          0011        003
   077      63    00111111          0101        005        ************
                  ++++++++
                  +++++++/( A(PIN #05) IS  DPE CC ZERO (1)H
                  ++++++/( B(PIN #06) IS  DPE CC COUT (1)H
                  +++++/( C(PIN #07) IS  DPE CC NEG (1)H
                  ++++/( D(PIN #04) IS  DPE CC VBIT (1)H
                  +++/( E(PIN #03) IS  DPF IR 10 (1)H
                  ++/( F(PIN #02) IS  DPF IR 09 (1)H
                  +/( G(PIN #01) IS  DPF IR 08 (1)H
                  /( H(PIN #15) IS  DPF IR 15 (1)H
```

```
                                  /( *Y4 (PIN # 9) CONF MPC 03 L
                                  */( *Y3 (PIN #10) CONF MPC 02 L
                                  **/( *Y2 (PIN #11) CONF MPC 01 L
                                  ***/( *Y1 (PIN #12) CONF MPC 04 L
 OCTAL DECIMAL                    ****        OCTAL
ADDRESS ADDRESS   HGFEDCBA        ****        DATA
   100     64     01000000        0011        003
   101     65     01000001        0011        003
   102     66     01000010        0011        003
   103     67     01000011        0011        003
   104     68     01000100        0011        003
   105     69     01000101        0011        003
   106     70     01000110        0011        003
   107     71     01000111        0011        003
   110     72     01001000        0011        003
   111     73     01001001        0011        003
   112     74     01001010        0011        003
   113     75     01001011        0011        003
   114     76     01001100        0011        003
   115     77     01001101        0011        003        BR (ALWAYS)
   116     78     01001110        0011        003
   117     79     01001111        0011        003        ************
   120     80     01010000        0101        005
   121     81     01010001        0101        005
   122     82     01010010        0101        005
   123     83     01010011        0101        005
   124     84     01010100        0011        003
   125     85     01010101        0011        003
   126     86     01010110        0011        003
   127     87     01010111        0011        003
   130     88     01011000        0011        003
   131     89     01011001        0011        003
   132     90     01011010        0011        003
   133     91     01011011        0011        003
   134     92     01011100        0101        005
   135     93     01011101        0101        005        BLT
   136     94     01011110        0101        005
   137     95     01011111        0101        005        ************

   140     96     01100000        0101        005
   141     97     01100001        0011        003
   142     98     01100010        0101        005
   143     99     01100011        0011        003
   144    100     01100100        0101        005
   145    101     01100101        0011        003
   146    102     01100110        0101        005
   147    103     01100111        0011        003
   150    104     01101000        0101        005
   151    105     01101001        0011        003
   152    106     01101010        0101        005
   153    107     01101011        0011        003
   154    108     01101100        0101        005
   155    109     01101101        0011        003        BEQ
   156    110     01101110        0101        005
   157    111     01101111        0011        003        ************
   160    112     01110000        0101        005
   161    113     01110001        0011        003
   162    114     01110010        0101        005
   163    115     01110011        0011        003
   164    116     01110100        0011        003
   165    117     01110101        0011        003
   166    118     01110110        0011        003
   167    119     01110111        0011        003
   170    120     01111000        0011        003
   171    121     01111001        0011        003
   172    122     01111010        0011        003
   173    123     01111011        0011        003
   174    124     01111100        0101        005
   175    125     01111101        0011        003        BLE
   176    126     01111110        0101        005
   177    127     01111111        0011        003        ************
                  ********
                  *******/( A(PIN #05) IS  DPE CC ZERO (1)H
                  ******/( B(PIN #06) IS  DPE CC COUT (1)H
                  *****/( C(PIN #07) IS  DPE CC NEG (1)H
                  ****/( D(PIN #04) IS  DPE CC VBIT (1)H
                  ***/( E(PIN #03) IS  DPF IR 10 (1)H
                  **/( F(PIN #02) IS  DPF IR 09 (1)H
                  */( G(PIN #01) IS  DPF IR 08 (1)H
                  /( H(PIN #15) IS  DPF IR 15 (1)H
```

```
                                  /( =Y4 (PIN # 9) CONF MPC 03 L
                                  */( =Y3 (PIN #10) CONF MPC 02 L
                                  **/( #Y2 (PIN #11) CONF MPC 01 L
                                  ***/( #Y1 (PIN #12) CONF MPC 04 L
  OCTAL DECIMAL                   ****      OCTAL
ADDRESS ADDRESS   HGFEDCBA        ****      DATA
    200     128   10000000        0011      003
    201     129   10000001        0011      003
    202     130   10000010        0011      003
    203     131   10000011        0011      003
    204     132   10000100        0101      005
    205     133   10000101        0101      005
    206     134   10000110        0101      005
    207     135   10000111        0101      005
    210     136   10001000        0011      003
    211     137   10001001        0011      003
    212     138   10001010        0011      003
    213     139   10001011        0011      003
    214     140   10001100        0101      005
    215     141   10001101        0101      005        BPL
    216     142   10001110        0101      005
    217     143   10001111        0101      005        ************
    220     144   10010000        0011      003
    221     145   10010001        0011      003
    222     146   10010010        0011      003
    223     147   10010011        0011      003
    224     148   10010100        0011      003
    225     149   10010101        0011      003
    226     150   10010110        0011      003
    227     151   10010111        0011      003
    230     152   10011000        0101      005
    231     153   10011001        0101      005
    232     154   10011010        0101      005
    233     155   10011011        0101      005
    234     156   10011100        0101      005
    235     157   10011101        0101      005        BVC
    236     158   10011110        0101      005
    237     159   10011111        0101      005        ************

    240     160   10100000        0011      003
    241     161   10100001        0101      005
    242     162   10100010        0101      005
    243     163   10100011        0101      005
    244     164   10100100        0011      003
    245     165   10100101        0101      005
    246     166   10100110        0101      005
    247     167   10100111        0101      005
    250     168   10101000        0011      003
    251     169   10101001        0101      005
    252     170   10101010        0101      005
    253     171   10101011        0101      005
    254     172   10101100        0011      003
    255     173   10101101        0101      005        BHI
    256     174   10101110        0101      005
    257     175   10101111        0101      005        ************
    260     176   10110000        0011      003
    261     177   10110001        0011      003
    262     178   10110010        0101      005
    263     179   10110011        0101      005
    264     180   10110100        0011      003
    265     181   10110101        0011      003
    266     182   10110110        0101      005
    267     183   10110111        0101      005
    270     184   10111000        0011      003
    271     185   10111001        0011      003
    272     186   10111010        0101      005
    273     187   10111011        0101      005
    274     188   10111100        0011      003
    275     189   10111101        0011      003        BCC
    276     190   10111110        0101      005
    277     191   10111111        0101      005        ************
                  ********
                  *******/( A(PIN #05) IS  DPE CC ZERO (1)H
                  ******/( B(PIN #06) IS  DPE CC COUT (1)H
                  *****/( C(PIN #07) IS  DPE CC NEG (1)H
                  ****/( D(PIN #04) IS  DPE CC VBIT (1)H
                  ***/( E(PIN #03) IS  DPF IR 10 (1)H
                  **/( F(PIN #02) IS  DPF IR 09 (1)H
                  */( G(PIN #01) IS  DPF IR 08 (1)H
                  /( H(PIN #15) IS  DPF IR 15 (1)H
```

```
                                  /( #Y4 (PIN # 9) CONF MPC 03 L
                                  */( #Y3 (PIN #10) CONF MPC 02 L
                                  **/( #Y2 (PIN #11) CONF MPC 01 L
                                  ***/( #Y1 (PIN #12) CONF MPC 04 L
 OCTAL DECIMAL                    ****          OCTAL
ADDRESS ADDRESS   HGFEDCBA        ****          DATA
   300     192    11000000        0101          005
   301     193    11000001        0101          005
   302     194    11000010        0101          005
   303     195    11000011        0101          005
   304     196    11000100        0011          003
   305     197    11000101        0011          003
   306     198    11000110        0011          003
   307     199    11000111        0011          003
   310     200    11001000        0101          005
   311     201    11001001        0101          005
   312     202    11001010        0101          005
   313     203    11001011        0101          005
   314     204    11001100        0011          003
   315     205    11001101        0011          003        BMI
   316     206    11001110        0011          003
   317     207    11001111        0011          003        ************
   320     208    11010000        0101          005
   321     209    11010001        0101          005
   322     210    11010010        0101          005
   323     211    11010011        0101          005
   324     212    11010100        0101          005
   325     213    11010101        0101          005
   326     214    11010110        0101          005
   327     215    11010111        0101          005
   330     216    11011000        0011          003
   331     217    11011001        0011          003
   332     218    11011010        0011          003
   333     219    11011011        0011          003
   334     220    11011100        0011          003
   335     221    11011101        0011          003        BVS
   336     222    11011110        0011          003
   337     223    11011111        0011          003        ************

   340     224    11100000        0101          005
   341     225    11100001        0011          003
   342     226    11100010        0011          003
   343     227    11100011        0011          003
   344     228    11100100        0101          005
   345     229    11100101        0011          003
   346     230    11100110        0011          003
   347     231    11100111        0011          003
   350     232    11101000        0101          005
   351     233    11101001        0011          003
   352     234    11101010        0011          003
   353     235    11101011        0011          003
   354     236    11101100        0101          005
   355     237    11101101        0011          003        BLOS
   356     238    11101110        0011          003
   357     239    11101111        0011          003        ************
   360     240    11110000        0101          005
   361     241    11110001        0101          005
   362     242    11110010        0011          003
   363     243    11110011        0011          003
   364     244    11110100        0101          005
   365     245    11110101        0101          005
   366     246    11110110        0011          003
   367     247    11110111        0011          003
   370     248    11111000        0101          005
   371     249    11111001        0101          005
   372     250    11111010        0011          003
   373     251    11111011        0011          003
   374     252    11111100        0101          005
   375     253    11111101        0101          005        BCS
   376     254    11111110        0011          003
   377     255    11111111        0011          003        ************
                  ********
                  ********/( A(PIN #05) IS  DPE CC ZERO (1)H
                  *******/( B(PIN #06) IS  DPE CC COUT (1)H
                  ******/( C(PIN #07) IS  DPE CC NEG (1)H
                  *****/( D(PIN #04) IS  DPE CC VBIT (1)H
                  ****/( E(PIN #03) IS  DPF IR 10 (1)H
                  ***/( F(PIN #02) IS  DPF IR 09 (1)H
                  **/( G(PIN #01) IS  DPF IR 08 (1)H
                  */( H(PIN #15) IS  DPF IR 15 (1)H
```

PAGE REVISION CONTROL SHEET

SH NO	PAGE REVISIONS								
1	H	J	K	L	M	N	P	R	S
2	H	J	R	L	M	M	N	R	S
3	H	H	H	H	H	H	H	R	R
4	H	H	H	H	H	H	H	R	R
5	H	H	J	J	J	J	J	R	R
6	H	H	J	J	J	K	K	R	R
7	H	H	J	J	J	J	J	R	R
8	H	H	H	H	H	H	H	R	R
9	H	H	J	J	J	J	J	R	R
10	H	J	J	K	L	L	M	R	R
11	H	H	J	R	K	K	K	R	R
12	H	H	J	J	K	K	K	R	R
13	H	H	J	J	K	K	K	R	S
14	H	H	H	H	H	H	H	R	R

ECO NO.	5	6	7	8	9	10	11	12	13
ETCH REV	C	C	E*	E	E	E	E	F	F

REMARKS

*ETCH REV'D NOT TO BE USED PER ORDER D.E.

FIRST USED ON OPTION/MODEL

DRN.		DATE 8/16/72
CHK'D.	M.T. Collins	DATE 8/21/72
ENG.		DATE 8/17/72
PROJ. ENG.		DATE 8/17/72
PROD.	M.T. Collins	DATE 8/21/72

digital EQUIPMENT CORPORATION MAYNARD, MASSACHUSETTS

TITLE CONTROL LOGIC AND MICROPROGRAM

NEXT HIGHER ASSY.

SCALE

SHEET 1 OF 14

SIZE	CODE	NUMBER	REV.
B	CS	M7261-0-1	S

DIST.

NOTE: UNLESS OTHERWISE NOTED, RESISTANCE IS IN OHMS.
CAPACITANCE IS IN PICOFARADS.

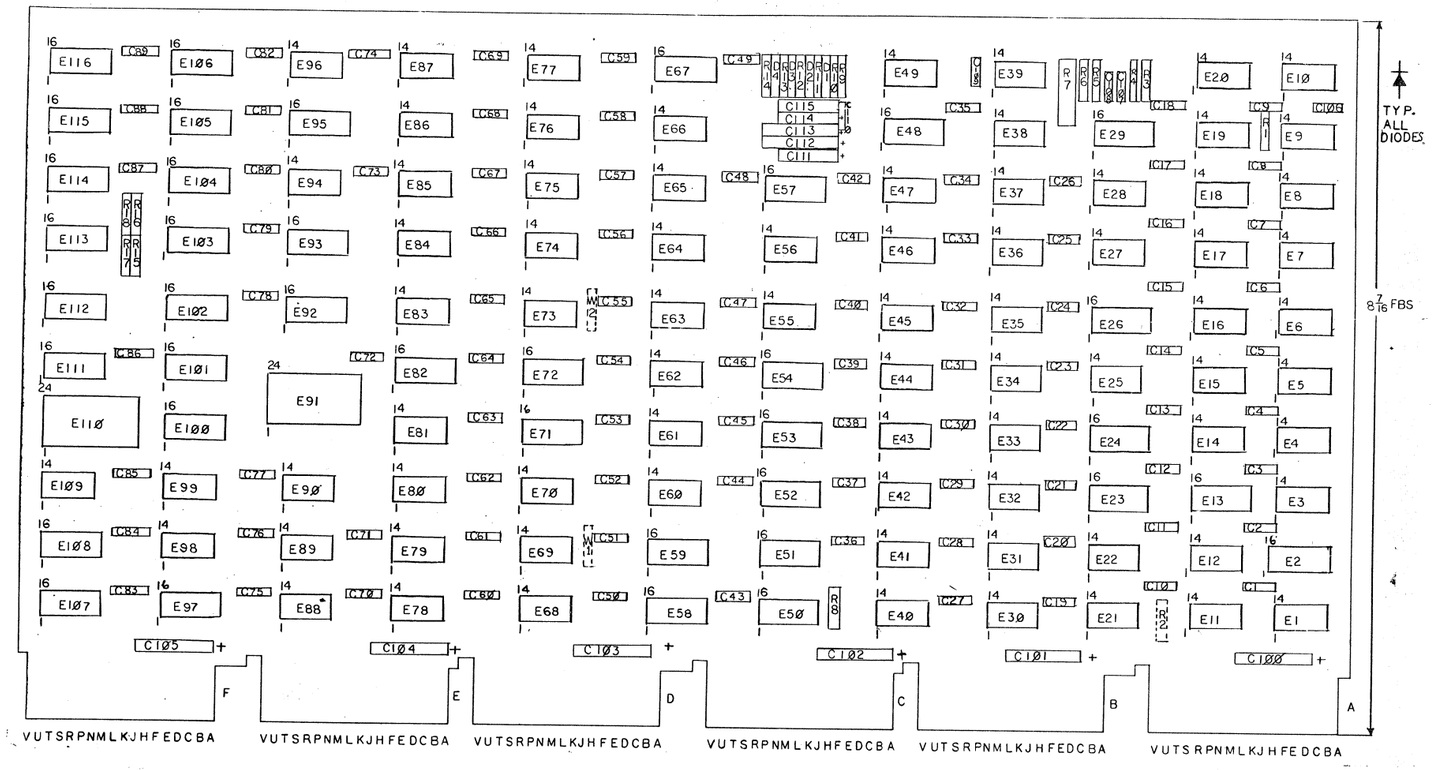

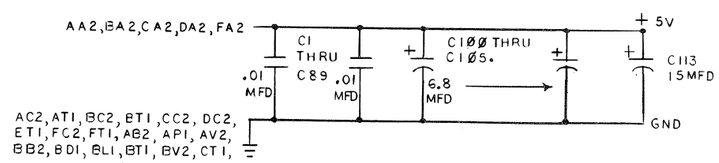

QTY.	REF. DESIGNATION	DESCRIPTION	PART NO.	ITEM NO.
6	C100 THRU C105	CAPACITOR, 6.8 MFD, 35V, 10%, S.TA	1005306	69
89	C1 THRU C89	CAPACITOR, .01 MFD, 100V, 20%, DISC	1001610	68
2	C114,115	CAPACITOR, .68 MFD, 35V, 10%, S.TA.	1009964	67
1	C113	CAPACITOR, 15MFD, 20V, 10%, S.TA	1004812	66
1	C112	CAPACITOR, 10MFD, 20V, 10%, S.TA.	1004813	65
1	C111	CAPACITOR, 2.2MFD, 20V, 10%, S.TA.	1002627	64
1	C110	CAPACITOR, 220PF, 100V, 5%, DM	1000021	63
1	C109	CAPACITOR, 120 PF, 100V, 5%, DM.	1000018	62
1	C108	CAPACITOR, 1000 PF 100V, 5%, DM	1000042	61
1	C107	CAPACITOR, 2200 PF, 250V, 20%, DISC	1000055	60
1	C106	CAPACITOR, 470 PF, 100V, D.M.	1000024	59
4	D1,2,3,4.	DIODE DG64	1100114	58
2	R6,R8	RESISTOR, 390, 1/4W, 5%	1300309	57
1	R14	RESISTOR, 5.6K, 1/4W, 5%	1301874	56
1	R11	RESISTOR, 10K, 1/4W, 5%	1300479	55
1	R7	RESISTOR, 1K, 3/4W, 10%, POT.	1309143-07	54
6	R4,5,9,10,12,13	RESISTOR, 30K, 1/4W, 5%	1302394	53
3	R3,16,18.	RESISTOR, 1K, 1/4W, 5%	1300365	52
6	E54,82,92,93,95,100.	RESISTOR NETWORK	1311003-02	51
1	R1	RESISTOR, 150, 1/4W, 5%	1300250	50
				49
2	R15,17	RESISTOR, 2K, 1/4W, 5%	1302388	48
				47
				46
1	E24	IC A01A2	23A01A2	45
1	E116	IC A19A2	23A19A2	44
1	E115	IC A13A2	23A13A2	43
1	E114	IC A11A2	23A11A2	42
1	E113	IC A18A2	23A18A2	41
1	E112	IC A10A2	23A10A2	40
1	E108	IC A14A1	23A14A1	39
1	E107	IC A09A2	23A09A2	38
1	E106	IC A17A2	23A17A2	37
1	E105	IC A16A2	23A16A2	36
1	E104	IC A05A2	23A05A2	35
1	E103	IC A20A2	23A20A2	34
1	E102	IC A04A2	23A04A2	33
1	E72	IC A09A1	23A09A1	32
1	E71	IC A07A1	23A07A1	31
1	E53	IC A02A2	23A02A2	30
2	E91,110.	IC DEC 74154	1909701	29
1	E89	IC DEC 7405	1909930	28
1	E61	IC DEC 7410	1905576	27
1	E60	IC DEC 7430	1905578	26
2	E58,59.	IC DEC 74153	1909937	25
3	E50,51,97.	IC DEC 74174	1910652	24
3	E49,78,109	IC DEC 74H01-1	1909849	23
2	E46,62.	IC DEC 7427	1910878	22
2	E45,69.	IC DEC 8815	1909713	21
1	E39	IC DEC 7413	1909989	20
2	E34,75.	IC DEC 7420	1905577	19
4	E29,48,57,67.	IC DEC 9602	1910951	18
4	E25,63,83,90.	IC DEC 7404	1909686	17
7	E20,28,36,73,76,87,98.	IC DEC 7474	1905547	16
1	E17	IC DEC 7437	1910091	15
3	E12,22,32.	IC DEC 380	1909485	14
4	E10,64,81,84.	IC DEC 74H40	1905586	13
10	E9,27,37,47,55,66,80,85,96,99	IC DEC 7400	1905575	12
13	E6,14,18,19,33,35,38,68,70,74,77,88,94.	IC DEC 7402	1909004	11
9	E4,7,8,15,16,44,56,65,86.	IC DEC 7473	1905587	10
3	E3,5,79.	IC DEC 7408	1910155	9
7	E2,13,23,26,52,101,111.	IC DEC 74175	1910651	8
9	E1,11,21,30,31,40 THRU 43.	IC DEC 8881	1909705	7
12		EYELET	9006732	6
1		HANDLE, MODULE	E-PS-1210711-02	5
1		ETCHED CIRCUIT BOARD	5009745	4
REF		MODULE ECO HISTORY	B-MH-M7261-0-6	3
REF		ASSY/DRILL HOLE LAYOUT	D-AH-M7261-0-5	2
REF		X-Y COORDINATE HOLE LOCATION	K-CO-M7261-0-4	1

PARTS LIST

TRANSISTOR & DIODE CONVERSION CHART

DEC	EIA	DEC	EIA
D664	1N3605		

REVISIONS

DRN Sommers DATE 9-5-73
CHK'D DATE 10-30-73
ENG DATE 10-30-73
PROD DATE 10-30-73

digital EQUIPMENT CORPORATION MAYNARD, MASSACHUSETTS

TITLE CONTROL LOGIC & MICROPROGRAM

SIZE D CODE CS NUMBER M7261-0-1 REV. S

PRINTED CIRCUIT REV. F

SHEET 2 OF

DEC FORM NO. DRD 118

SIZE D CODE CS NUMBER M7261-0-1 REV S

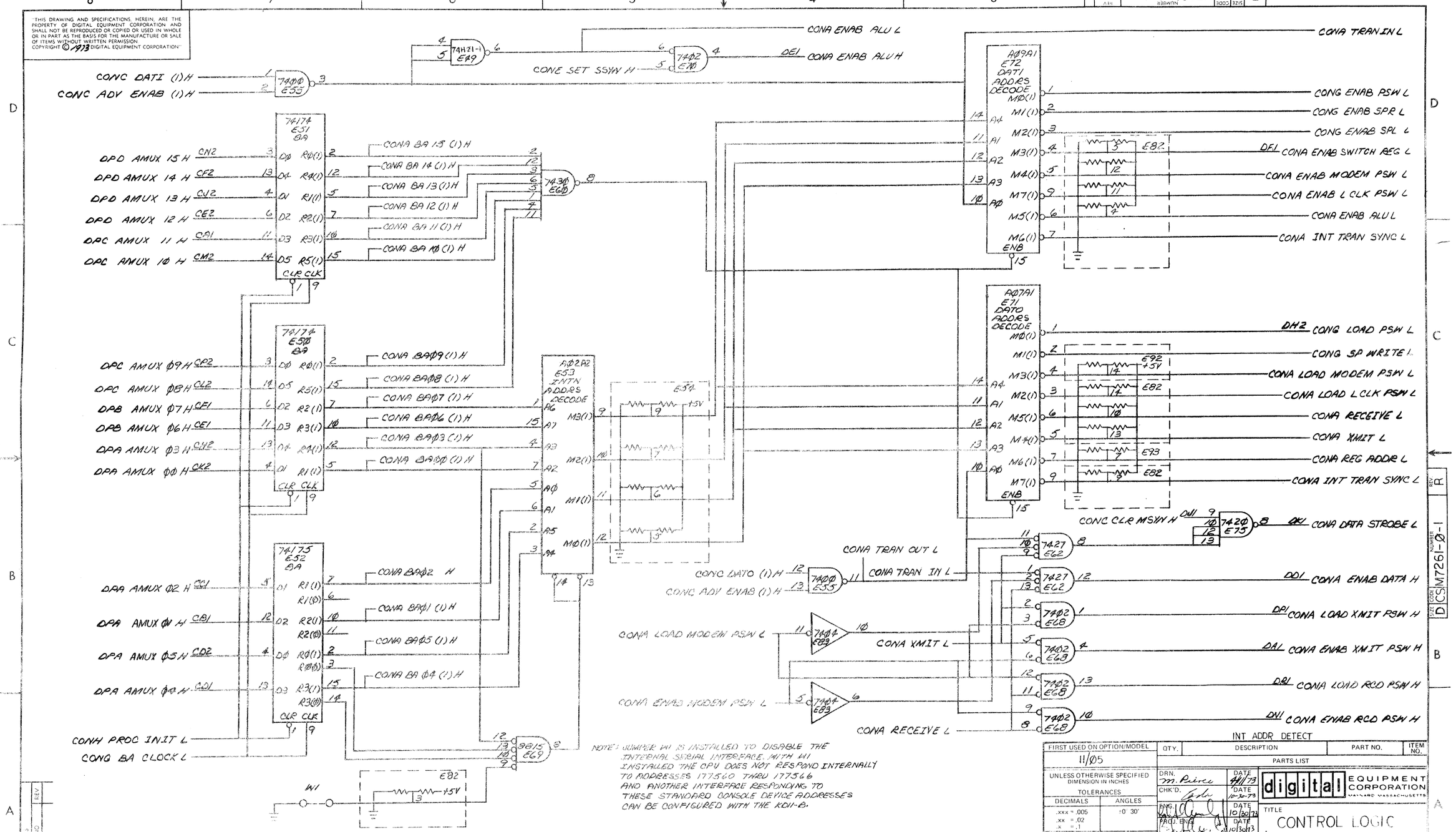

NOTE: JUMPER W1 IS INSTALLED TO DISABLE THE INTERNAL SERIAL INTERFACE. WITH W1 INSTALLED THE CPU DOES NOT RESPOND INTERNALLY TO ADDRESSES 177560 THRU 177566 AND ANOTHER INTERFACE RESPONDING TO THESE STANDARD CONSOLE DEVICE ADDRESSES CAN BE CONFIGURED WITH THE KD11-B.

FIRST USED ON OPTION/MODEL	QTY.	DESCRIPTION	PART NO.	ITEM NO.
11/05	PARTS LIST			

UNLESS OTHERWISE SPECIFIED DIMENSION IN INCHES
TOLERANCES
DECIMALS .xxx = .005 .xx = .02 .x = .1
ANGLES ±0° 30'
REMOVE BURRS AND BREAK SHARP CORNERS SURFACE QUALITY √
MATERIAL
FINISH

DRN. M. Pierce DATE 4/11/73
CHK'D. DATE 10-30-73
ENG. DATE 10/30/73
PROJ. ENG. DATE 10/30/73
PROD. DATE 10/30/73
NEXT HIGHER ASSY. B-DD-KD11-B
SCALE
SHEET 3 OF

digital EQUIPMENT CORPORATION MAYNARD MASSACHUSETTS

TITLE
CONTROL LOGIC & MICROPROGRAM (CONA)

SIZE D CODE CS NUMBER M7261-0-1 REV. R

DIST.

DEC FORM NO

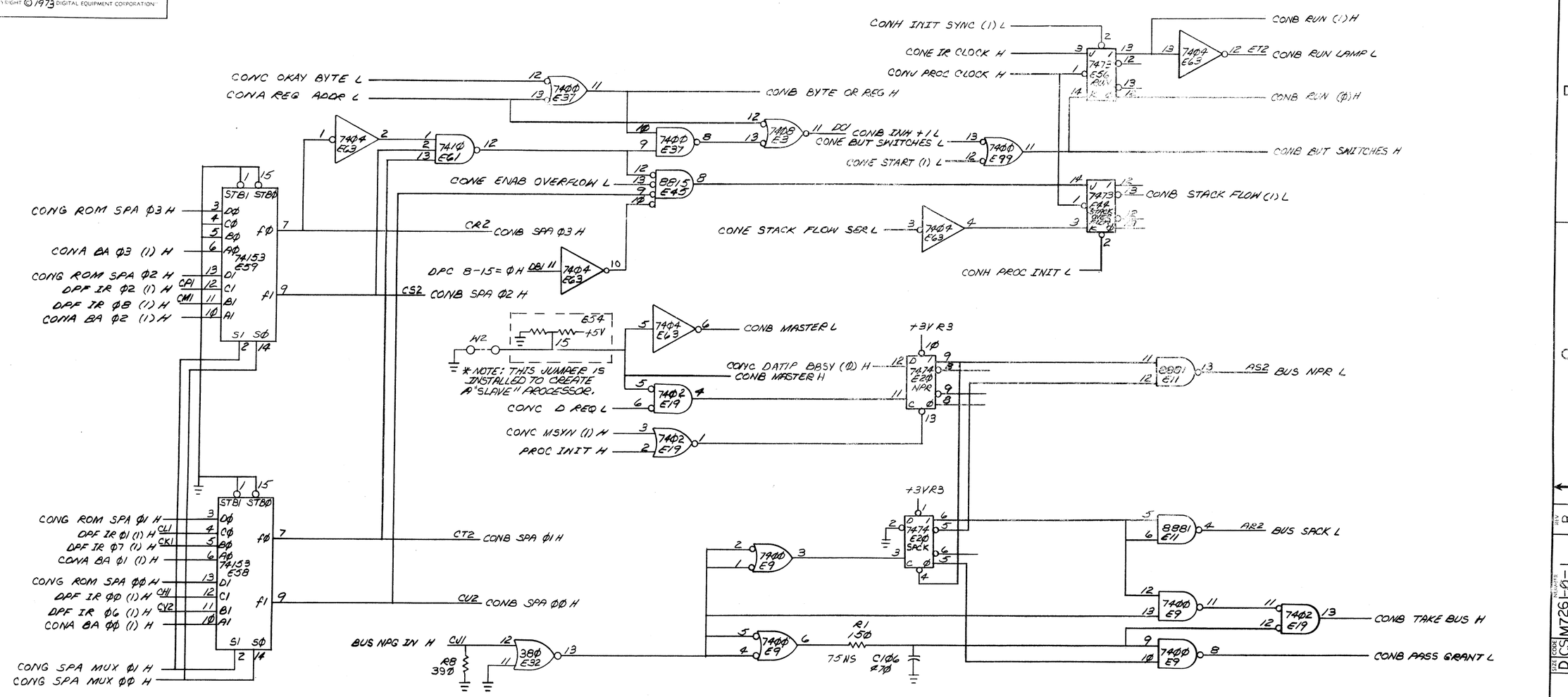

STACKFLOW & SPM

FIRST USED ON OPTION/MODEL	QTY.	DESCRIPTION	PART NO.	ITEM NO.
11/Ø5		PARTS LIST		

UNLESS OTHERWISE SPECIFIED DIMENSION IN INCHES
TOLERANCES
DECIMALS: .xxx = .005, .xx = .02, .x = .1
ANGLES: ±0 30'
REMOVE BURRS AND BREAK SHARP CORNERS SURFACE QUALITY

MATERIAL —
FINISH —

		DATE
DRN.	M. Pierce	4/13/73
CHK'D.		10/24/73
ENG.		DATE 10/30/73
PROJ. ENG.		DATE 10/30/73
PROD.		DATE 10/30/73

NEXT HIGHER ASSY. B-DD-KDII-B
SCALE —
SHEET 4 OF

digital EQUIPMENT CORPORATION MAYNARD MASSACHUSETTS

TITLE CONTROL LOGIC & MICROPROGRAM (CONB)

SIZE	CODE	NUMBER	REV.
D	CS	M7261-Ø-1	R

DIST.

D CS M7261-Ø-1 REV R

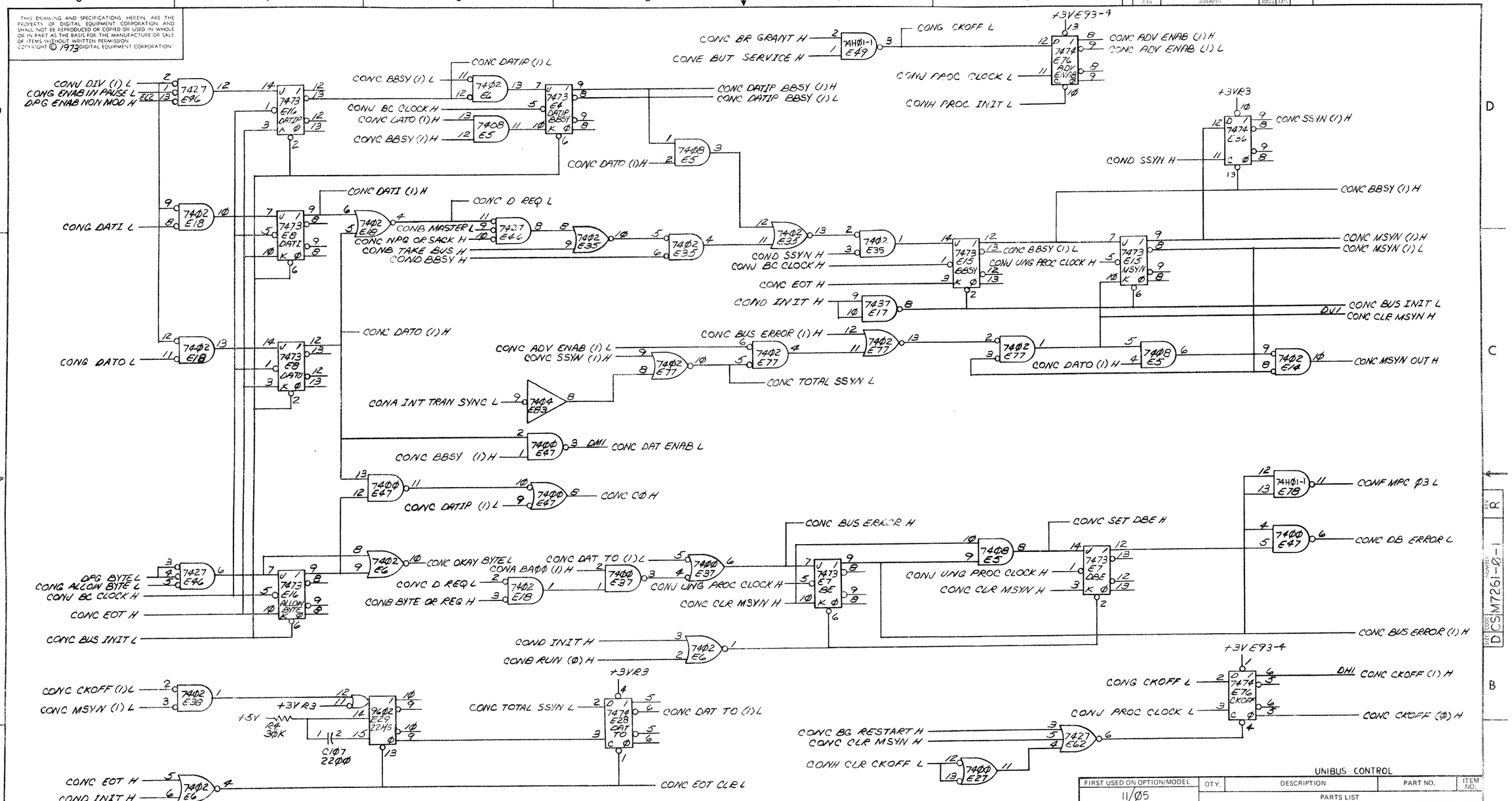

UNIBUS CONTROL

FIRST USED ON OPTION/MODEL	QTY.	DESCRIPTION	PART NO.	ITEM NO.
11/05		PARTS LIST		

UNLESS OTHERWISE SPECIFIED DIMENSION IN INCHES
TOLERANCES
DECIMALS .xxx = .005 .xx = .02 .x = .1
ANGLES ±0 30'
REMOVE BURRS AND BREAK SHARP CORNERS SURFACE QUALITY
MATERIAL —
FINISH —

DRN. M. Prince DATE 4/18/73
CHK'D. DATE 10-20-73
ENG. DATE 10/20/73
PROJ. ENG. DATE 10/20/73
PROD. DATE 10/20/73
NEXT HIGHER ASSY. B-DD-KD11-B
SCALE —
SHEET 5 OF

digital EQUIPMENT CORPORATION MAYNARD MASSACHUSETTS

TITLE CONTROL LOGIC & MICROPROGRAM (CONC)

SIZE	CODE	NUMBER	REV.
D	CS	M7261-0-1	R

DIST.

REVISIONS REV CHANGE NO. CHK

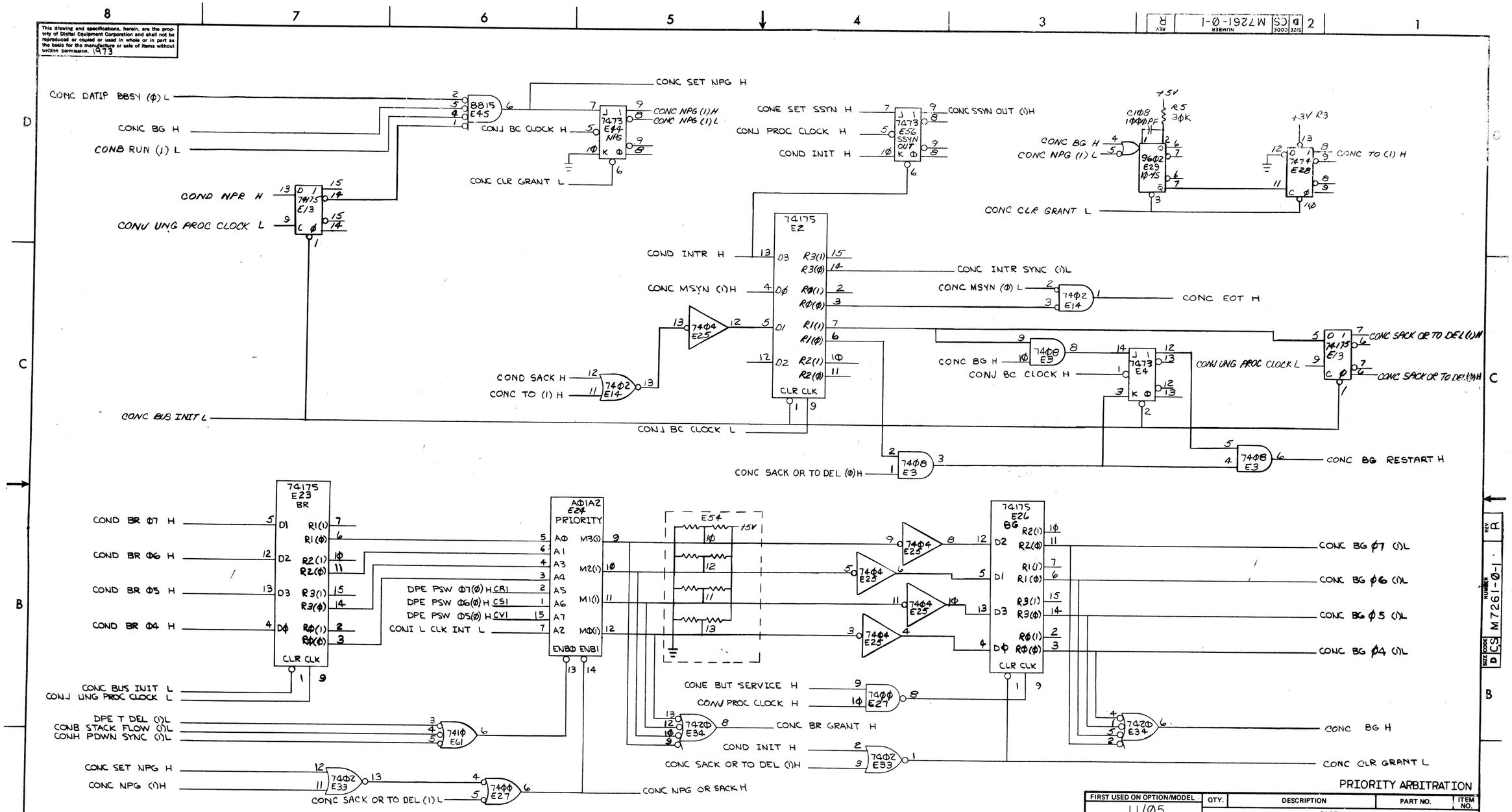

PRIORITY ARBITRATION

FIRST USED ON OPTION/MODEL	QTY.	DESCRIPTION	PART NO.	ITEM NO.
11/05		PARTS LIST		

UNLESS OTHERWISE SPECIFIED DIMENSION IN INCHES. TOLERANCES

DECIMALS	ANGLES
.XXX = .005 .XX = .02 .X = .1	±0° 30'

REMOVE BURRS AND BREAK SHARP CORNERS SURFACE QUALITY ✓

MATERIAL —/—/—

FINISH —/—/—

		DATE
DRN.	M. Price	5/24/73
CHK'D	Costa	10/30/73
ENG		10/30/73
ENG		10/30/73
PROD		10/30/73

NEXT HIGHER ASSY: B-DD-KD11-B

SCALE —/—

SHEET 6 OF

digital EQUIPMENT CORPORATION MAYNARD, MASSACHUSETTS

TITLE CONTROL LOGIC & MICROPROGRAM (CONC.1)

SIZE	CODE	NUMBER	REV.
D	CS	M7261-Ø-1	R

DIST.

REVISIONS: REV. / CHANGE NO. / CHK

DEC FORM NO DRD 102-B

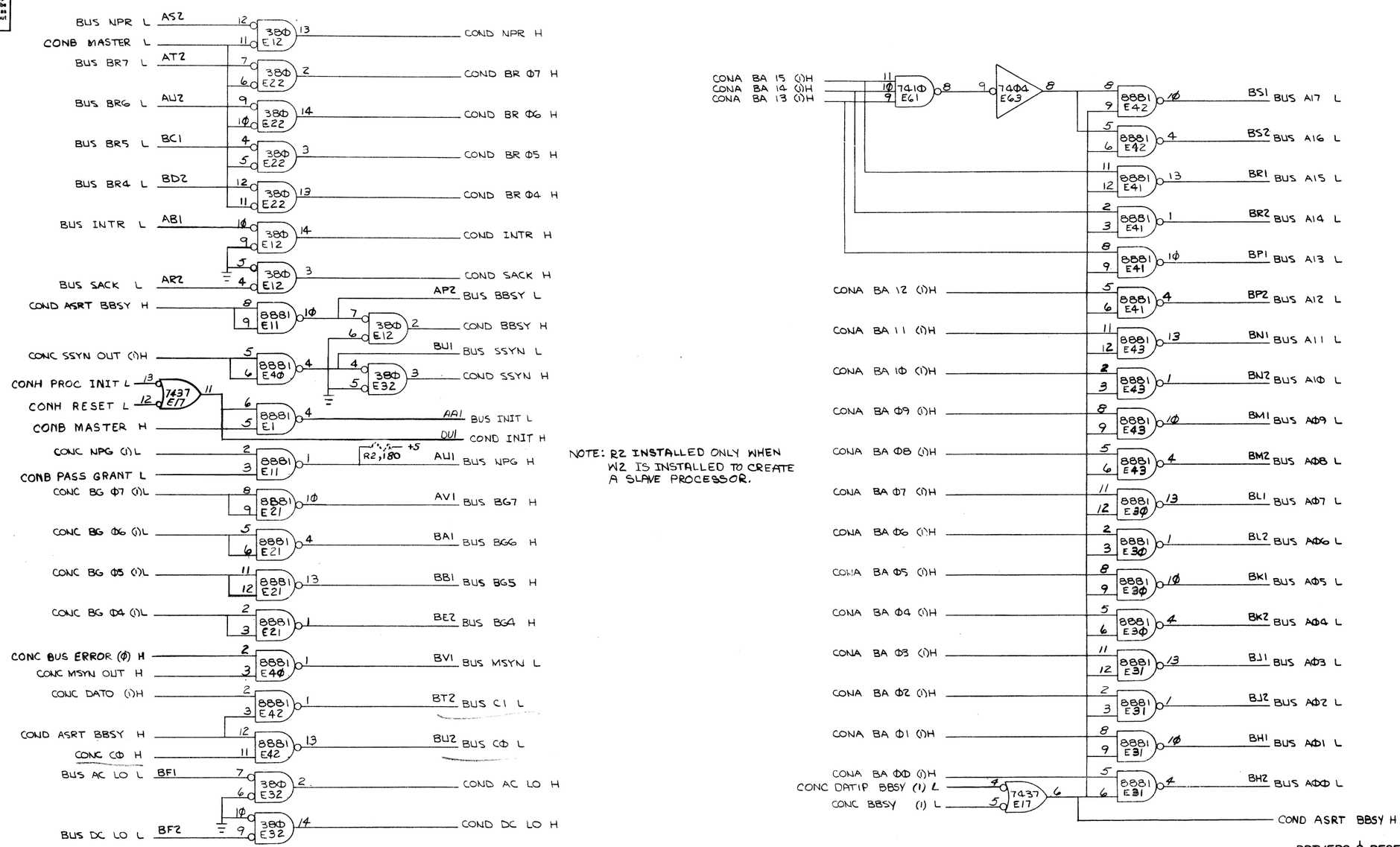

NOTE: R2 INSTALLED ONLY WHEN W2 IS INSTALLED TO CREATE A SLAVE PROCESSOR.

DRIVERS & RECEIVERS

FIRST USED ON OPTION/MODEL	QTY.	DESCRIPTION	PART NO.	ITEM NO.
11/Ø5		PARTS LIST		

UNLESS OTHERWISE SPECIFIED DIMENSION IN INCHES. TOLERANCES

DECIMALS	ANGLES
.XXX = .005 .XX = .02 .X = .1	±0° 30'

REMOVE BURRS AND BREAK SHARP CORNERS SURFACE QUALITY ✓

MATERIAL —/—/—

FINISH —/—/—

		DATE
DRN.	M. Pierce	4/2d/73
CHK'D		10-30-73
ENG.		10/30/73
PROJ. ENG.		10/30/73
PROD. ENG.		10/30/73

digital EQUIPMENT CORPORATION MAYNARD, MASSACHUSETTS

TITLE CONTROL LOGIC & MICROPROGRAM (COND)

NEXT HIGHER ASSY: B-DD-KD11-B

SCALE —/—

SHEET 7 OF

SIZE	CODE	NUMBER	REV
D	CS	M7261-Ø-1	R

DIST.

REVISIONS: REV | CHANGE NO. | CHK

DEC FORM NO DRD 102-B

SIZE D CODE CS NUMBER M7261-Ø-1 REV R

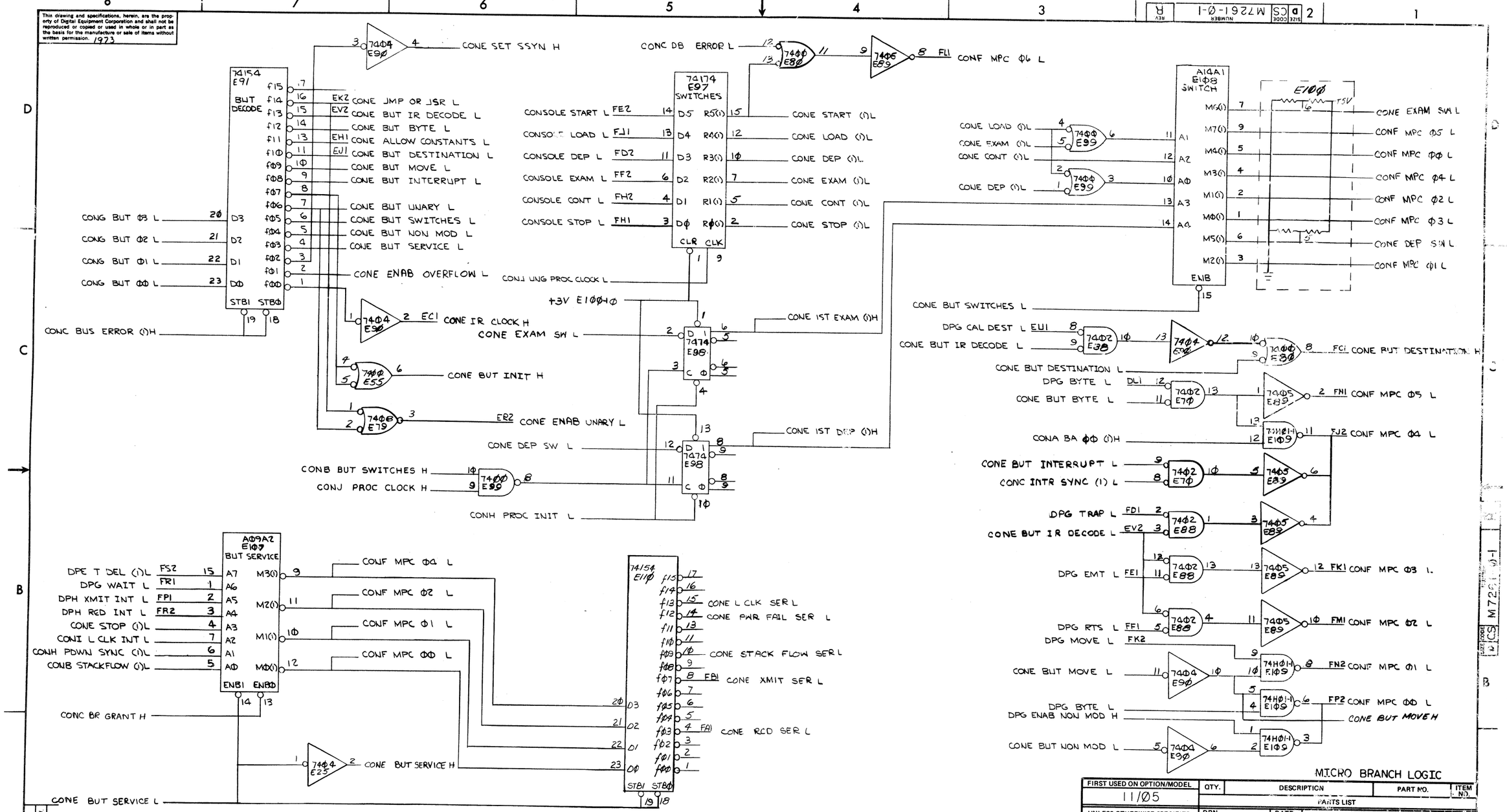

MICRO BRANCH LOGIC

FIRST USED ON OPTION/MODEL	QTY.	DESCRIPTION	PART NO.	ITEM NO.
11/05		PARTS LIST		

UNLESS OTHERWISE SPECIFIED DIMENSION IN INCHES. TOLERANCES

DECIMALS	ANGLES
.XXX = .005	±0° 30'
.XX = .02	
.X = .1	

REMOVE BURRS AND BREAK SHARP CORNERS SURFACE QUALITY ✓

MATERIAL —/—/—

FINISH —/—/—

DRN. M. Pisice	DATE 5/24/73	digital EQUIPMENT CORPORATION MAYNARD, MASSACHUSETTS
CHK'D	DATE 10-30-73	
ENG	DATE 10/30/73	TITLE CONTROL LOGIC & MICROPROGRAM (CONE)
PROJ. ENG.	DATE 10/30/73	
PROD.	DATE 10/30/73	
NEXT HIGHER ASSY. B-DD-KD11-B		SIZE D CODE CS NUMBER M7261-Ø-1 REV. R
SCALE —/—		
SHEET 8 OF		DIST.

REVISIONS: REV. | CHANGE NO. | CHK

DEC FORM NO DRD 102-B

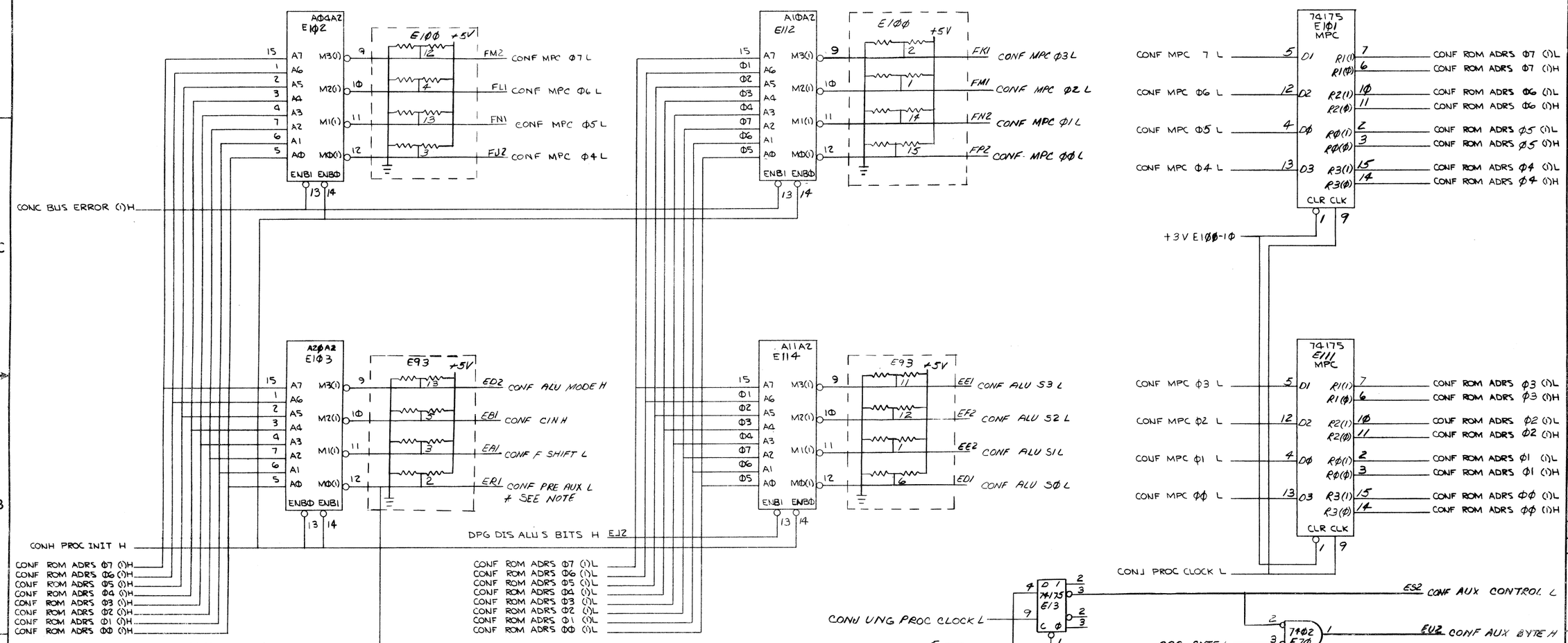

NOTE: AUX CONTROL IS ASSERTED ONE MICRO STEP EARLIER THAN IN ETCH REV C AND E. THIS PIN (E103 PIN 12) CONNECTS TO ROM 23-A10A1 ON THE M7260 MODULE WHICH PREVIOUSLY CONNECTED TO CONG CKOFF L. THIS ETCH REV DOES NOT EVER SHUT ITS CLOCK OFF TO PERFORM AN AUX CONTROL.

MICRO PC

FIRST USED ON OPTION/MODEL	QTY.	DESCRIPTION	PART NO.	ITEM NO.
11/05		PARTS LIST		

UNLESS OTHERWISE SPECIFIED DIMENSION IN INCHES. TOLERANCES

DECIMALS	ANGLES
.XXX = .005 .XX = .02 .X = .1	±0° 30'

REMOVE BURRS AND BREAK SHARP CORNERS SURFACE QUALITY ✓

MATERIAL —

FINISH —

		DATE
DRN.	M. Pierce	5/23/73
CHK'D	Costa	10-30-73
ENG		10/30/73
PROJ. ENG.		10/30/73
PROD		10/30/73

NEXT HIGHER ASSY. B-DD-KD11-B

SCALE —

SHEET 9 OF

digital EQUIPMENT CORPORATION MAYNARD, MASSACHUSETTS

TITLE CONTROL LOGIC & MICROPROGRAM (CONF)

SIZE	CODE	NUMBER	REV.
D	CS	M7261-0-1	R

DIST.

REVISIONS: REV | CHANGE NO. | CHK

DEC FORM NO DPD 102-B

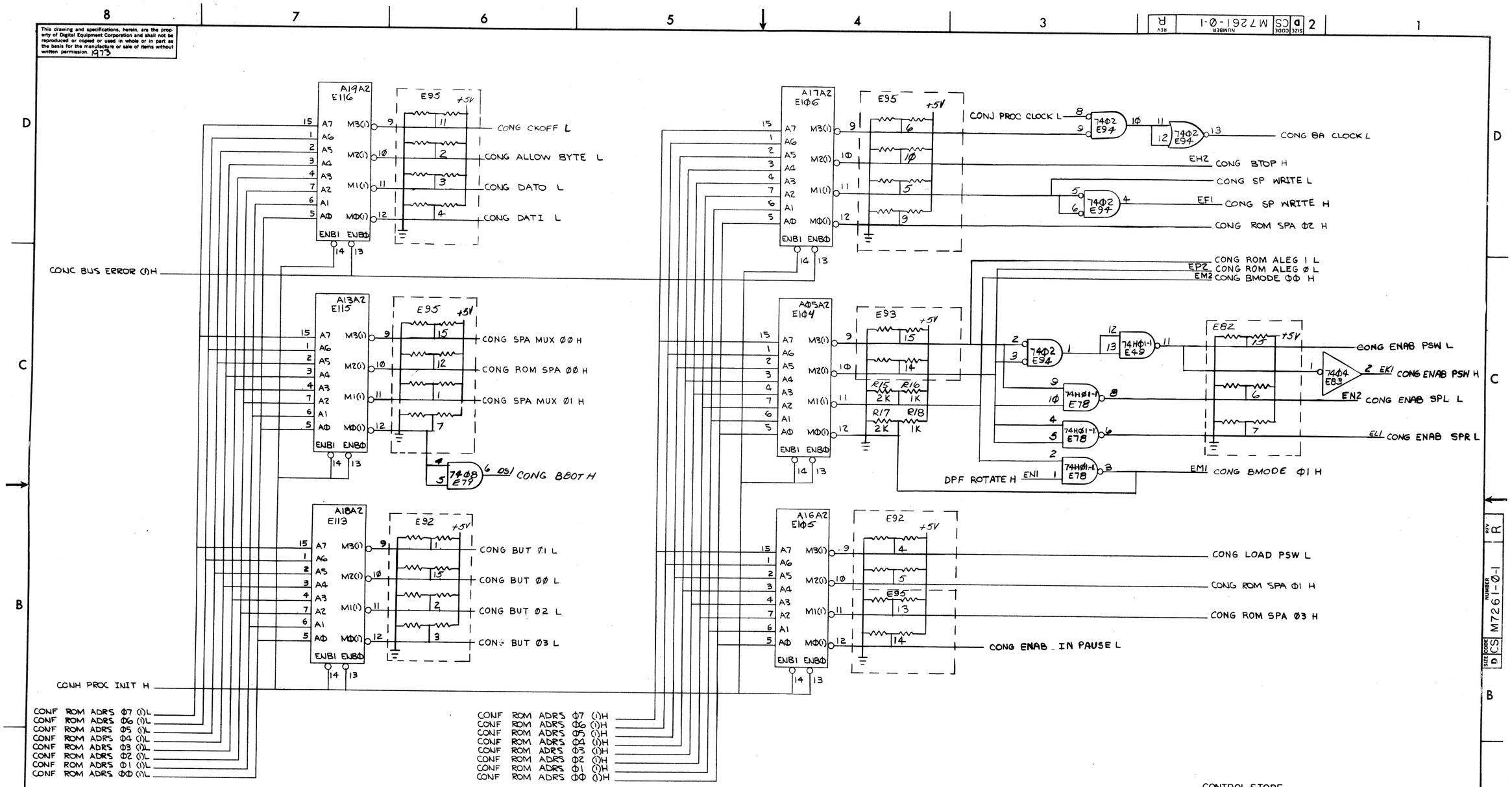

CONTROL STORE

FIRST USED ON OPTION/MODEL	QTY.	DESCRIPTION	PART NO.	ITEM NO.
11/Ø5		PARTS LIST		

UNLESS OTHERWISE SPECIFIED DIMENSION IN INCHES. TOLERANCES

DECIMALS	ANGLES
.XXX = .005 .XX = .02 .X = .1	±0° 30'

REMOVE BURRS AND BREAK SHARP CORNERS SURFACE QUALITY ✓

MATERIAL —/—/—

FINISH —/—/—

		DATE
DRN.	M Prince	5/29/72
CHK'D	Corte	10-30-73
ENG		10/30/73
PROJ. ENG		10/30/73
PROD		10/30/73

NEXT HIGHER ASSY: B-DD-KD11-B

SCALE —/—

SHEET 10 OF

digital EQUIPMENT CORPORATION MAYNARD, MASSACHUSETTS

TITLE CONTROL LOGIC & MICROPROGRAM (CONG)

SIZE	CODE	NUMBER	REV.
D	CS	M7261-Ø-1	R

DIST.

REVISIONS: REV. | CHANGE NO. | CHK

DEC FORM NO DRD 102-B

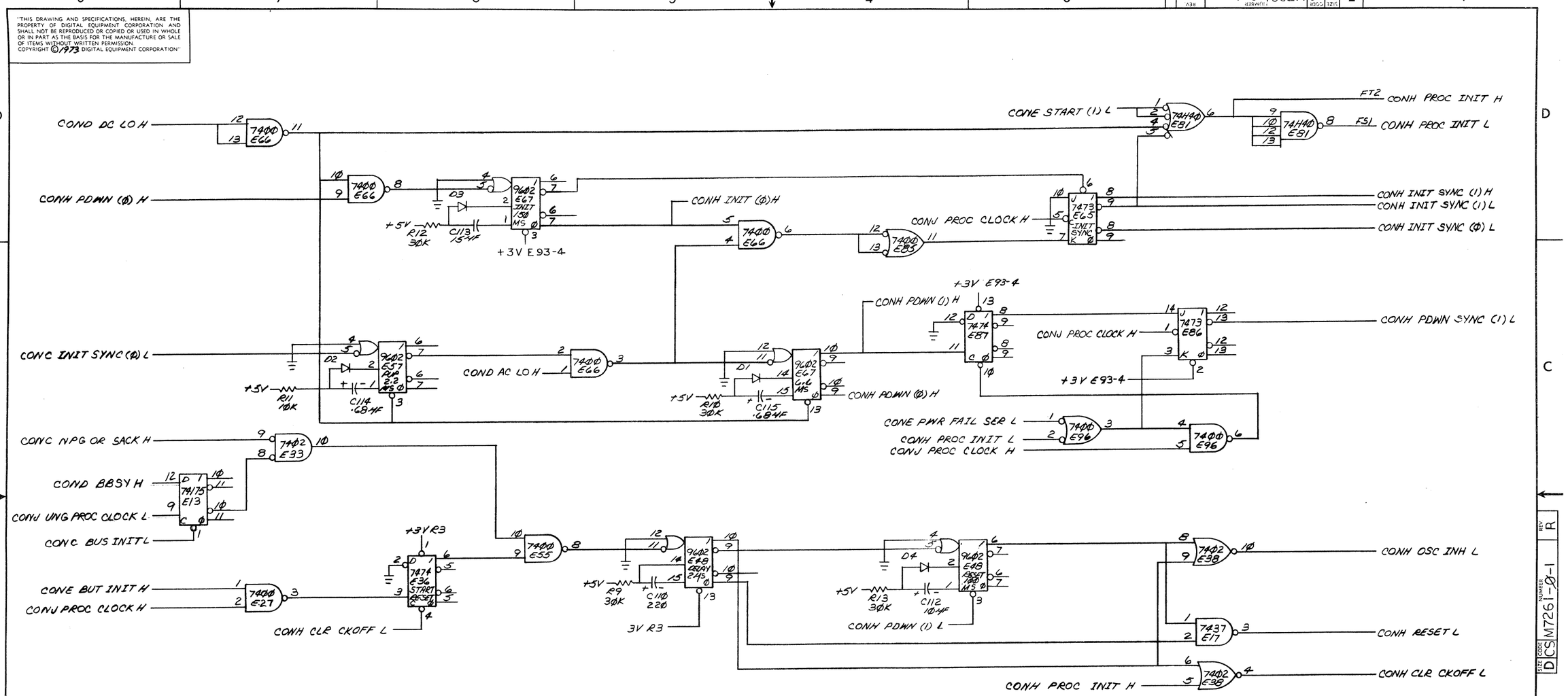

POWER FAIL

FIRST USED ON OPTION/MODEL	QTY.	DESCRIPTION	PART NO.	ITEM NO.
11/Ø5		PARTS LIST		

UNLESS OTHERWISE SPECIFIED DIMENSION IN INCHES

TOLERANCES

DECIMALS	ANGLES
.xxx = .005	±0° 30'
.xx = .02	
.x = .1	

REMOVE BURRS AND BREAK SHARP CORNERS SURFACE QUALITY ∨

MATERIAL —

FINISH —

		DATE
DRN.	M. Rivera	
CHK'D.		10-31-72
ENG.		10/30/73
PROJ. ENG.		10/30/72
PROD.		10/30/73

NEXT HIGHER ASSY: B-DD-KD11-B

SCALE —

SHEET 11 OF

digital EQUIPMENT CORPORATION MAYNARD MASSACHUSETTS

TITLE CONTROL LOGIC & MICROPROGRAM (CONH)

SIZE	CODE	NUMBER	REV.
D	CS	M7261-Ø-1	R

DIST.

REVISIONS: REV | CHANGE NO | CHK

DEC F09-V-1-5 DPD 1521-C

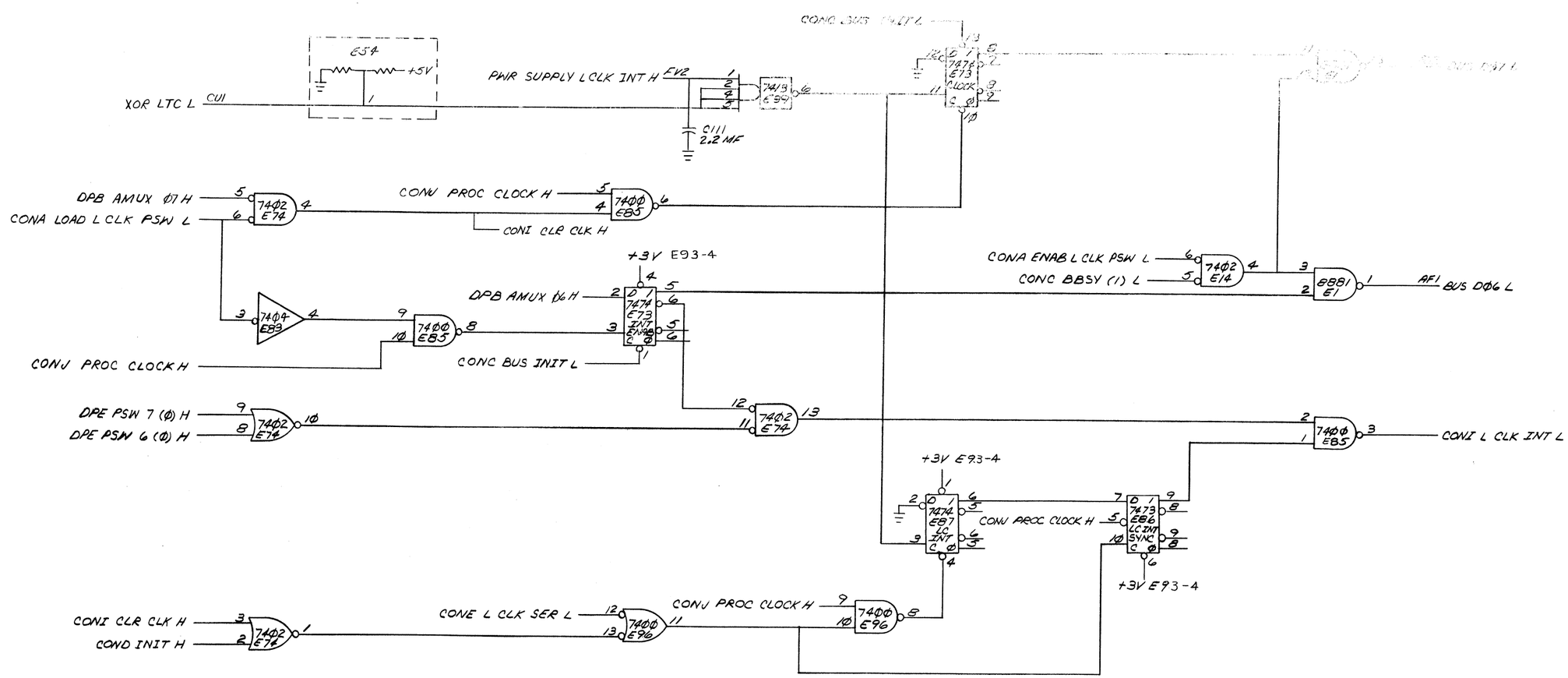

LINE CLOCK

FIRST USED ON OPTION/MODEL	OTY.	DESCRIPTION	PART NO.	ITEM NO.
11/Ø5		PARTS LIST		

UNLESS OTHERWISE SPECIFIED DIMENSION IN INCHES
TOLERANCES
DECIMALS: .xxx = .005, .xx = .02, .x = .1
ANGLES: ±0° 30'
REMOVE BURRS AND BREAK SHARP CORNERS SURFACE QUALITY

MATERIAL —
FINISH —

DRN. M. Prince 4/5/73 DATE
CHK'D. DATE
ENG. DATE 10/30/73
PROJ. ENG. DATE 10/30/73
PROD. DATE 10/30/73

NEXT HIGHER ASSY. B-DD-KDII-B
SCALE —
SHEET 12 OF

digital EQUIPMENT CORPORATION MAYNARD MASSACHUSETTS

TITLE
CONTROL LOGIC & MICROPROGRAM (CONT)

SIZE	CODE	NUMBER	REV.
D	CS	M7261-Ø-1	R

DIST.

REVISIONS: REV. | CHANGE NO. | CHK.

DEC FORM NO SRS 102-C

D CS M7261-Ø-1 R

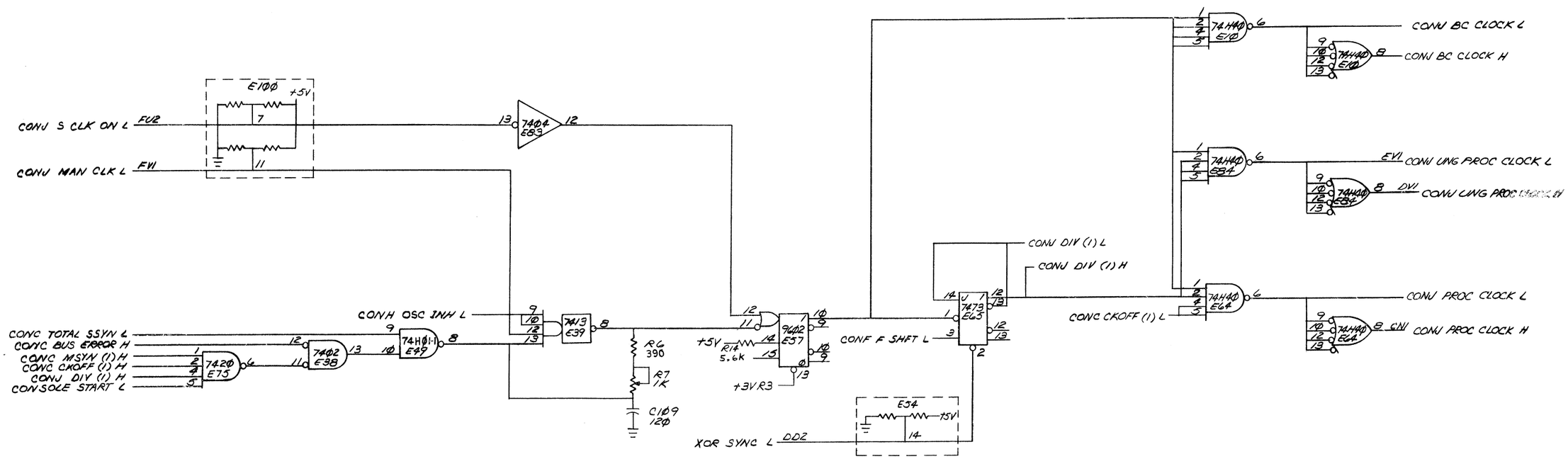

CPU CLOCK

FIRST USED ON OPTION/MODEL	QTY.	DESCRIPTION	PART NO.	ITEM NO.
11/05		PARTS LIST		

UNLESS OTHERWISE SPECIFIED DIMENSION IN INCHES
TOLERANCES
DECIMALS: .xxx = .005, .xx = .02, .x = .1
ANGLES: ±0° 30'
REMOVE BURRS AND BREAK SHARP CORNERS SURFACE QUALITY ✓
MATERIAL —
FINISH —

DRN. M. Rice	DATE 4/5/73	digital EQUIPMENT CORPORATION MAYNARD MASSACHUSETTS
CHK'D.	DATE 10-30-73	
ENG.	DATE 10/30/73	TITLE CONTROL LOGIC & MICROPROGRAM (CONJ)
PROJ. ENG.	DATE 10/30/73	
PROD.	DATE 10/30/73	
NEXT HIGHER ASSY. B-DD-KD11-B		SIZE D CODE CS NUMBER M7261-0-1 REV. S
SCALE —		
SHEET 13 OF		DIST.

REVISIONS: REV / CHANGE NO / CHK

DEC FORM NO 1524

Bit	Signal	Field
39	CONF MPC Ø7 L	NXT
38	CONF MPC Ø6 L	NXT
37	CONF MPC Ø5 L	NXT
36	CONF MPC Ø4 L	NXT
35	CONF MPC Ø3 L	NXT
34	CONF MPC Ø2 L	NXT
33	CONF MPC Ø1 L	NXT
32	CONF MPC ØØ L	NXT
31	CONF ALU S3 L	ALU
30	CONF ALU S2 L	ALU
29	CONF ALU S1 L	ALU
28	CONF ALU S0 L	ALU
27	CONF ALU MODE H	ALU
26	CONF CIN H	CRI
25	CONF F SHIFT L	FSH
24	CONF AUX CONTROL L	AUX
23	CONG LOAD PSW L	PSW
22	CONG ROM SPA Ø1 H	SP1
21	CONG ROM SPA Ø3 H	SP3
20	CONG ENAB IN PAUSE L	DIP
19	CONG SPA MUX ØØ H	SMØ
18	CONG ROM SPA ØØ H	SPØ
17	CONG SPA MUX Ø1 H	SM1
16	CONG BBOT H	BBT
15	CONG BA CLOCK L	BAR
14	CONG BTOP H	BTP
13	CONG SP WRITE L	SPF
12	CONG ROM SPA Ø2 H	SP2
11	CONG CKOFF L	CKO
10	CONG ALLOW BYTE L	ABT
Ø9	CONG DATO L	TNS
Ø8	CONG DATI L	TNS
Ø7	CONG ROM ALEG I L	ALG
Ø6	CONG ROM ALE Ø L	ALG
Ø5	CONG BMODE ØØ H	BRG
Ø4	CONG BMODE Ø1 H	BRG
Ø3	CONG BUT Ø1 L	BUT
Ø2	CONG BUT ØØ L	BUT
Ø1	CONG BUT Ø2 L	BUT
ØØ	CONG BUT Ø3 L	BUT

A04A2 — A10A2 — A11A2 — A20A2 — A16A2 — A13A2 — A17A2 — A19A2 — A05A2 — A18A2

	31	30	29	28	27
	ALU				
AL	L	L	L	L	H
AA	L	L	L	L	L
AB	L	L	L	H	H
$A\bar{B}$	L	L	H	L	H
Ø	L	L	H	H	H
A OR B	L	H	L	L	H
BL	L	H	L	H	H
A PLUS B	L	H	H	L	L
A XOR B	L	H	H	L	H
A-B-1	H	L	L	H	L
$\bar{B}$	H	L	H	L	H
-1	H	H	L	L	H
A-1	H	H	H	H	L
$\bar{A}$	H	H	H	H	H
ASL	H	H	L	L	L
ROL	H	H	L	H	L
ASR	H	H	H	L	L
ROR	H	H	H	H	L

26 CRI	
OFF	L
ON	H

23 PSW	
HOLD	H
LOAD	L

14 BTP	
BREG	H
SEX	L
+1	L

10 ABT	
NO	H
YES	L

	Ø5	Ø4
	BRG	
LOAD	H	H
SLEFT	L	H
SRIGHT	H	L
HOLD	L	L

	Ø3	Ø2	Ø1	ØØ
	BUT			
NON	H	H	H	H
JMP/JSR	H	L	H	H
IR DECODE	L	H	H	H
BYTE	L	L	H	H
CONST	H	H	L	H
DEST	H	L	L	H
MOV	L	H	L	H
INTR	L	L	L	H
INIT	H	H	H	L
UNARY	H	L	H	L
SWITCHES	L	H	H	L
NON MOD	L	L	H	L
SERVICE	H	H	L	L
SSYNC	H	L	L	L
ENOVFLO	L	H	L	L
IR CLK	L	L	L	L

25 FSH	
OFF	H
ON	L

20 DIP	
OFF	H
ON	L

16 BBT	
BRG	H
SEX	H
+1	L

13 SPF	
READ	H
WRITE	L

	Ø9	Ø8
	TNS	
NONE	H	H
DATI	H	L
DATO	L	H

24 AUX	
OFF	H
ON	L

	19 SMØ	17 SM1
ROM	H	H
IRS	H	L
IRD	L	H
BA	L	L

15 BAR	
HOLD	H
LOAD	L

11 CKO	
OFF	H
ON	L

	Ø7	Ø6
	ALG	
SP	H	H
NULL	H	L
SPR	L	H
PSW	L	L

CONTROL STORE WORD FORMAT

FIRST USED ON OPTION/MODEL	QTY.	DESCRIPTION	PART NO.	ITEM NO.
11/Ø5		PARTS LIST		

UNLESS OTHERWISE SPECIFIED DIMENSION IN INCHES. TOLERANCES

DECIMALS	ANGLES
.XXX = .005	±0° 30'
.XX = .02	
.X = .1	

REMOVE BURRS AND BREAK SHARP CORNERS SURFACE QUALITY ✓

MATERIAL —/—/—

FINISH —/—/—

		DATE
DRN.	M. Rivera	5/3/73
CHK'D		DATE 10-30-73
ENG		DATE 10/30/73
PROJ ENG		DATE 10/30/73
PROD		DATE 10/30/73

NEXT HIGHER ASSY B-DD-KD11-B

SCALE —/—/—

SHEET 1A OF

digital EQUIPMENT CORPORATION MAYNARD MASSACHUSETTS

TITLE CONTROL LOGIC & MICROPROGRAM

SIZE	CODE	NUMBER	REV.
D	CS	M7261-Ø-1	R

DIST.

REVISIONS — CHANGE NO. — REV. — CHK

BRUNING 40-322 15M40

DEC FORM NO DRD 102-B

SIZE D CODE CS NUMBER M7261-Ø-1 REV R

PAGE REVISION CONTROL SHEET

SH NO	PAGE REVISIONS	REMARKS
1	A	
2	A	
3	A	
4	A	
5	A	
6	A	
7	A	
8	A	
9	A	
10	A	
11	A	
12	A	
13	A	
14	A	
15	A	
16	A	
17	A	
ETCH REV	C	
ECO NO.	5	FIRST USED ON OPTION/MODEL

DRN.		DATE
CHK'D	M Tobell	DATE 8/21/72
ENG.		DATE 8/17/72
PROJ. ENG.		DATE 8/17/72
PROD.	M Tobell	DATE 8/2/72
NEXT HIGHER ASSY.		
SCALE		
SHEET 1 OF 17		

digital EQUIPMENT CORPORATION MAYNARD, MASSACHUSETTS

TITLE CONTROL LOGIC ROM PATTERNS

SIZE	CODE	NUMBER	REV.
B	RL	M7261-0-8	A

DIST.

2

```
                          /( =Y8 (PIN #9) CONA INT TRAN SYNC L
                          */( =Y7 (PIN #7) CONA REG ADDR L
                          **/( =Y6 (PIN #6) CONA RECEIVE L
                          ***/( =Y5 (PIN #5) CONA TRANSMIT L
                          ****/( =Y4 (PIN #4) CONA LOAD MODEM PSW L
                          *****/( =Y3 (PIN #3) CONA LOAD L CLK PSW L
                          ******/( =Y2 (PIN #2) CONG SP WRITE L
                          *******/( =Y1 (PIN #1) CONG LOAD PSW L
 OCTAL DECIMAL            ********        OCTAL
ADDRESS ADDRESS   EDCBA   ********        DATA
  000      0     00000   11111111        377
  001      1     00001   11111111        377
  002      2     00010   11111111        377
  003      3     00011   11111111        377
  004      4     00100   01111110        176        PSW ,TRAN OUT BA=177776
  005      5     00101   11111111        377        PSW ,TRAN OUT,BAR
  006      6     00110   01111011        173        LCLK ,TRANOUT
  007      7     00111   11111111        377        LCLK ,TRANOUT,BAR
  010      8     01000   00111101        075        GR<R0|R17> ,TRANOUT BA=1777XX
  011      9     01001   10111111        277        GR<R0|R17> ,TRANOUT,BAR
  012     10     01010   01111111        177        ODD BYTE (LCLK/TK/TP)
  013     11     01011   11111111        377
  014     12     01100   11111111        377
  015     13     01101   11111111        377
  016     14     01110   01111111        177        SWR ,TRANOUT BA=177570
  017     15     01111   11111111        377        SWR ,TRANOUT,BAR
  020     16     10000   01010111        127        TKS ,TRANOUT BA=177560
  021     17     10001   11011111        337        TKS ,TRANOUT,BAR
  022     18     10010   01100111        147        TPS ,TRANOUT BA=177564
  023     19     10011   11100111        357        TPS ,TRANOUT,BAR
  024     20     10100   01011111        137        TKB ,TRANOUT BA=177562
  025     21     10101   11011111        337        TKB ,TRANOUT,BAR
  026     22     10110   01110111        157        TPB ,TRANOUT BA=177566
  027     23     10111   11101111        357        TPB ,TRANOUT,BAR
  030     24     11000   11111111        377
  031     25     11001   11111111        377
  032     26     11010   11111111        377
  033     27     11011   11111111        377
  034     28     11100   11111111        377
  035     29     11101   11111111        377
  036     30     11110   11111111        377
  037     31     11111   11111111        377
                 *****
                 ****/( A(PIN #10) IS  CONA TRAN OUT L
                 ***/( B(PIN #11) IS  Y3 OF F025
                 **/( C(PIN #12) IS  Y2 OF F025
                 */( D(PIN #13) IS  Y1 OF F025
                 /( E(PIN #14) IS  Y4 OF F025
```


3

```
                          /( =Y8 (PIN #9) CONA ENAB L CLK PSW L
                          */( =Y7 (PIN #7) CONA INT TRAN SYNC L
                          **/( =Y6 (PIN #6) CONA ENAB ALU L
                          ***/( =Y5 (PIN #5) CONA ENAB MODEM PSW L
                          ****/( =Y4 (PIN #4) CONA ENAB SWITCH REG L
                          *****/( =Y3 (PIN #3) CONG ENAB SPL L
                          ******/( =Y2 (PIN #2) CONG ENAB SPR L
                          *******/( =Y1 (PIN #1) CONG ENAB PSW L
 OCTAL DECIMAL            ********        OCTAL
ADDRESS ADDRESS   EDCBA   ********        DATA
  000      0     00000   11111111        377
  001      1     00001   11111111        377
  002      2     00010   11111111        377
  003      3     00011   11111111        377
  004      4     00100   10011110        236        PSW ,TRANIN BA=177776
  005      5     00101   11111111        377        PSW ,TRANIN,BAR
  006      6     00110   00111111        077        LCLK ,TRANIN BA=177546
  007      7     00111   11111111        377        LCLK ,TRANIN,BAR
  010      8     01000   10011001        231        GEN REG, ,TRANIN BA=1777XX
  011      9     01001   11111111        377        GEN REG ,TRANIN,BAR
  012     10     01010   10111111        277        ODD BYTE ADDRESS (LCLK/TK/TP)
  013     11     01011   11111111        377
  014     12     01100   11111111        377
  015     13     01101   11111111        377
  016     14     01110   10010111        227        SWR ,TRANIN BA=177570
  017     15     01111   11111111        377        SWR ,TRANIN,BAR
  020     16     10000   10001111        217        TKS ,TRANIN BA=177560
  021     17     10001   11111111        377        TKS ,TRANIN,BAR
  022     18     10010   10001111        217        TPS ,TRANIN BA=177564
  023     19     10011   11111111        377        TPS ,TRANIN,BAR
  024     20     10100   10011111        237        TKB ,TRANIN BA=177562
  025     21     10101   11111111        377        TKB ,TRANIN,BAR
  026     22     10110   10011111        237        TPB ,TRANIN BA=177566
  027     23     10111   11111111        377        TPB ,TRANIN,BAR
  030     24     11000   11111111        377
  031     25     11001   11111111        377
  032     26     11010   11111111        377
  033     27     11011   11111111        377
  034     28     11100   11111111        377
  035     29     11101   11111111        377
  036     30     11110   11111111        377
  037     31     11111   11111111        377
                 *****
                 ****/( A(PIN #10) IS  CONA TRAN IN L
                 ***/( B(PIN #11) IS  Y3 OF F025
                 **/( C(PIN #12) IS  Y2 OF F025
                 */( D(PIN #13) IS  Y1 OF F025
                 /( E(PIN #14) IS  Y4 OF F025
```

4

```
                                /( =Y8 (PIN #9)
                                */( =Y7 (PIN #7) CONE LINE CLOCK SER L
                                **/( =Y6 (PIN #6) CONE STACK FLOW L
                                ***/( =Y5 (PIN #5) CONE PWR FAIL SER L
                                ****/( =Y4 (PIN #4) CONE RCD SER L
                                *****/( =Y3 (PIN #3) CONE XMIT SER L
                                ******/( =Y2 (PIN #2)
                                *******/( =Y1 (PIN #1)
 OCTAL DECIMAL                  ********        OCTAL
ADDRESS ADDRESS    EDCBA        ********        DATA
   000      0     00000        11111111        377
   001      1     00001        11111111        377
   002      2     00010        11111111        377
   003      3     00011        11111111        377
   004      4     00100        11111111        377
   005      5     00101        11111111        377
   006      6     00110        11111111        377
   007      7     00111        11111111        377
   010      8     01000        11111111        377
   011      9     01001        11111111        377
   012     10     01010        11110111        367        UART RCD INT MPC=64
   013     11     01011        11111111        377
   014     12     01100        11111111        377
   015     13     01101        11111111        377
   016     14     01110        11111011        373        UART XMIT INT MPC=60
   017     15     01111        11111111        377
   020     16     10000        11111111        377
   021     17     10001        11111111        377
   022     18     10010        11011111        337        ERT=1A STACK FLOW MPC=46
   023     19     10011        11111111        377
   024     20     10100        11110111        357        PWR FAIL MPC=43
   025     21     10101        11111111        377
   026     22     10110        10111111        277        LINE CLK INT MPC=42
   027     23     10111        11111111        377
   030     24     11000        11111111        377
   031     25     11001        11111111        377
   032     26     11010        11111111        377
   033     27     11011        11111111        377
   034     28     11100        11111111        377
   035     29     11101        11111111        377
   036     30     11110        11111111        377
   037     31     11111        11111111        377
                  *****
                  ****/( A(PIN #10) IS  CONH RUN GND L
                  ***/( B(PIN #11) IS  CONP MPC 00 L
                  **/( C(PIN #12) IS  CONF MPC 02 L
                  */( D(PIN #13) IS  CONF MPC 01 L
                  /( E(PIN #14) IS  CONF MPC 04 L
```


5

```
                                /( =Y8 (PIN #9) CONF MPC 05 L
                                */( =Y7 (PIN #7) CONE EXAM SW L
                                **/( =Y6 (PIN #6) CONE DEP SW L
                                ***/( =Y5 (PIN #5) CONF MPC 00 L
                                ****/( =Y4 (PIN #4) CONF MPC 04 L
                                *****/( =Y3 (PIN #3) CONF MPC 01 L
                                ******/( =Y2 (PIN #2) CONF MPC 02 L
                                *******/( =Y1 (PIN #1) CONF MPC 03 L
 OCTAL DECIMAL                  ********        OCTAL
ADDRESS ADDRESS    EDCBA        ********        DATA
   000      0     00000        11111000        370        CONTINUE
   001      1     00001        11111011        373        TWO SW =CONT,DEP
   002      2     00010        11111011        373        TWO SW EXAM,CONT
   003      3     00011        11111011        373        TWO SW LOAD,CONT
   004      4     00100        11111011        373        NO SW
   005      5     00101        11001010        312        DEP SW1 GOTO 313
   006      6     00110        10101000        250        EXAM GOTO TO 317
   007      7     00111        11101110        356        LOAD  GOTO TO 311
   010      8     01000        11111000        370        CONT=CLR EXAM
   011      9     01001        11111011        373        TWO SW =CONT,DEP
   012     10     01010        11101011        353        TWO SW EXAM,CONT
   013     11     01011        11101011        353        TWO SW LOAD,CONT
   014     12     01100        10111011        273        NO SW 1ST EXAM
   015     13     01101        11001010        312        DEP SW1
   016     14     01110        10101100        254        EXAM AND 1ST EXAM 323
   017     15     01111        11101110        356        LOAD GOTO 311
   020     16     10000        11111000        370        CONT=CLR DEP
   021     17     10001        11111011        373        TWO SW =CONT,DEP
   022     18     10010        11111011        373        TWO SW EXAM,CONT
   023     19     10011        11011011        333        TWO SW LOAD,CONT
   024     20     10100        11011011        333        NO SW 1ST DEP
   025     21     10101        11011010        332        DEP SW2 GOTO 312
   026     22     10110        10101000        250        EXAM,1ST DEP 317
   027     23     10111        11101110        356        LOAD GOTO 311
   030     24     11000        00000100        004
   031     25     11001        00000000        000
   032     26     11010        00000000        000
   033     27     11011        00000000        000
   034     28     11100        00000000        000
   035     29     11101        00000000        000
   036     30     11110        00000000        000
   037     31     11111        00000000        000
                  *****
                  ****/( A(PIN #10) IS  CONE LOAD (1)L ,AND, DEP (1)L ,BAR
                  ***/( B(PIN #11) IS  CONE LOAD (1)L ,AND, EXAM (1)L ,BAR
                  **/( C(PIN #12) IS  CONE CONT (1)L
                  */( D(PIN #13) IS  CONE 1ST EXAM (1)H
                  /( E(PIN #14) IS  CONE 1ST DEP (1)H
```

6

```
                                  /( =Y4 (PIN # 9) CONC SET BG 07 L
                                  */( =Y3 (PIN #10) CONC SET BG 06 L
                                  **/( =Y2 (PIN #11) CONC SET BG 05 L
                                  ***/( =Y1 (PIN #12) CONC SET BG 04 L
 OCTAL DECIMAL                    ****        OCTAL
ADDRESS ADDRESS   HGFEDCBA        ****        DATA
   000       0    00000000        1111        017
   001       1    00000001        1111        017
   002       2    00000010        1111        017
   003       3    00000011        1111        017
   004       4    00000100        1111        017
   005       5    00000101        1111        017
   006       6    00000110        1111        017
   007       7    00000111        1111        017
   010       8    00001000        1111        017
   011       9    00001001        1111        017
   012      10    00001010        1111        017
   013      11    00001011        1111        017
   014      12    00001100        1111        017
   015      13    00001101        1111        017
   016      14    00001110        1111        017
   017      15    00001111        1111        017
   020      16    00010000        1111        017
   021      17    00010001        1111        017
   022      18    00010010        1111        017
   023      19    00010011        1111        017
   024      20    00010100        1111        017
   025      21    00010101        1111        017
   026      22    00010110        1111        017
   027      23    00010111        1111        017
   030      24    00011000        1111        017
   031      25    00011001        1111        017
   032      26    00011010        1111        017
   033      27    00011011        1111        017
   034      28    00011100        1111        017
   035      29    00011101        1111        017
   036      30    00011110        1111        017
   037      31    00011111        1111        017
```


6 Con't

```
   040      32    00100000        0111        007
   041      33    00100001        1011        013
   042      34    00100010        0111        007
   043      35    00100011        1111        017        LCLK
   044      36    00100100        0111        007
   045      37    00100101        1011        013
   046      38    00100110        0111        007
   047      39    00100111        1101        015
   050      40    00101000        0111        007
   051      41    00101001        1011        013
   052      42    00101010        0111        007
   053      43    00101011        1111        017
   054      44    00101100        0111        007
   055      45    00101101        1011        013
   056      46    00101110        0111        007
   057      47    00101111        1110        016
   060      48    00110000        0111        007
   061      49    00110001        1011        013
   062      50    00110010        0111        007
   063      51    00110011        1111        017        LCLK
   064      52    00110100        0111        007
   065      53    00110101        1011        013
   066      54    00110110        0111        007
   067      55    00110111        1101        015
   070      56    00111000        0111        007
   071      57    00111001        1011        013
   072      58    00111010        0111        007
   073      59    00111011        1111        017
   074      60    00111100        0111        007
   075      61    00111101        1011        013
   076      62    00111110        0111        007
   077      63    00111111        1111        017
                  ********
                  ********/( A(PIN #05) IS  CONC BR 07 (1)L
                  *******/( B(PIN #06) IS  CONC BR 06 (1)L
                  ******/( C(PIN #07) IS  CONI LCLK INT L
                  *****/( D(PIN #04) IS  CONC BR 05 (1)L
                  ****/( E(PIN #03) IS  CONC BR 04 (1)L
                  ***/( F(PIN #02) IS  DPE PSW 07 (0)H
                  **/( G(PIN #01) IS  DPE PSW 06 (0)H
                  */( H(PIN #15) IS  DPE PSW 05 (0)H
```

7 JK

```
                                    /( =Y4 (PIN # 9) CONC SET BG 07 L
                                    */( =Y3 (PIN #10) CONC SET BG 06 L
                                    **/( =Y2 (PIN #11) CONC SET BG 05 L
                                    ***/( =Y1 (PIN #12) CONC SET BG 04 L
 OCTAL DECIMAL                      ****          OCTAL
ADDRESS ADDRESS   HGFEDCBA          ****          DATA
   100      64   01000000           0111          007
   101      65   01000001           1011          013
   102      66   01000010           0111          007
   103      67   01000011           1111          017
   104      68   01000100           0111          007
   105      69   01000101           1011          013
   106      70   01000110           0111          007
   107      71   01000111           1111          017
   110      72   01001000           0111          007
   111      73   01001001           1011          013
   112      74   01001010           0111          007
   113      75   01001011           1111          017
   114      76   01001100           0111          007
   115      77   01001101           1011          013
   116      78   01001110           0111          007
   117      79   01001111           1111          017
   120      80   01010000           0111          007
   121      81   01010001           1011          013
   122      82   01010010           0111          007
   123      83   01010011           1111          017
   124      84   01010100           0111          007
   125      85   01010101           1011          013
   126      86   01010110           0111          007
   127      87   01010111           1111          017
   130      88   01011000           0111          007
   131      89   01011001           1011          013
   132      90   01011010           0111          007
   133      91   01011011           1111          017
   134      92   01011100           0111          007
   135      93   01011101           1011          013
   136      94   01011110           0111          007
   137      95   01011111           1111          017
```

M7261-8 REV A

7 Cont

```
   140      96   01100000           0111          007
   141      97   01100001           1011          013
   142      98   01100010           0111          007
   143      99   01100011           1111          017          LCLK
   144     100   01100100           0111          007
   145     101   01100101           1011          013
   146     102   01100110           0111          007
   147     103   01100111           1101          015
   150     104   01101000           0111          007
   151     105   01101001           1111          017
   152     106   01101010           0111          007
   153     107   01101011           1111          017          LCLK
   154     108   01101100           0111          007
   155     109   01101101           1011          013
   156     110   01101110           0111          007
   157     111   01101111           1110          016
   160     112   01110000           0111          007
   161     113   01110001           1011          013
   162     114   01110010           0111          007
   163     115   01110011           1111          017          LCLK
   164     116   01110100           0111          007
   165     117   01110101           1011          013
   166     118   01110110           0111          007
   167     119   01110111           1101          015
   170     120   01111000           0111          007
   171     121   01111001           1011          013
   172     122   01111010           0111          007
   173     123   01111011           1111          017
   174     124   01111100           0111          007
   175     125   01111101           1011          013
   176     126   01111110           0111          007
   177     127   01111111           1111          017
                 ********
                 *******/( A(PIN #05) IS  CONC BR 07 (1)L
                 ******/( B(PIN #06) IS  CONC BR 06 (1)L
                 *****/( C(PIN #07) IS  CONI LCLK INT L
                 ****/( D(PIN #04) IS  CONC BR 05 (1)L
                 ***/( E(PIN #03) IS  CONC BR 04 (1)L
                 **/( F(PIN #02) IS  DPE PSW 07 (0)H
                 */( G(PIN #01) IS  DPE PSW 06 (0)H
                 /( H(PIN #15) IS  DPE PSW 05 (0)H
```

8

```
                                  /( =Y4 (PIN # 9) CONC SET BG 07 L
                                  */( =Y3 (PIN #10) CONC SET BG 06 L
                                  **/( =Y2 (PIN #11) CONC SET BG 05 L
                                  ***/( =Y1 (PIN #12) CONC SET BG 04 L
 OCTAL DECIMAL                    ****        OCTAL
ADDRESS ADDRESS   HGFEDCBA        ****        DATA
   200     128    10000000        0111        007
   201     129    10000001        1111        017
   202     130    10000010        0111        007
   203     131    10000011        1111        017
   204     132    10000100        0111        007
   205     133    10000101        1111        017
   206     134    10000110        0111        007
   207     135    10000111        1111        017
   210     136    10001000        0111        007
   211     137    10001001        1111        017
   212     138    10001010        0111        007
   213     139    10001011        1111        017
   214     140    10001100        0111        007
   215     141    10001101        1111        017
   216     142    10001110        0111        007
   217     143    10001111        1111        017
   220     144    10010000        0111        007
   221     145    10010001        1111        017
   222     146    10010010        0111        007
   223     147    10010011        1111        017
   224     148    10010100        0111        007
   225     149    10010101        1111        017
   226     150    10010110        0111        007
   227     151    10010111        1111        017
   230     152    10011000        0111        007
   231     153    10011001        1111        017
   232     154    10011010        0111        007
   233     155    10011011        1111        017
   234     156    10011100        0111        007
   235     157    10011101        1111        017
   236     158    10011110        0111        007
   237     159    10011111        1111        017
```

M7261-8 REV A

8 Cont'D

```
   240     160    10100000        0111        007
   241     161    10100001        1011        013
   242     162    10100010        0111        007
   243     163    10100011        1111        017        LCLK
   244     164    10100100        0111        007
   245     165    10100101        1011        013
   246     166    10100110        0111        007
   247     167    10100111        1101        015
   250     168    10101000        0111        007
   251     169    10101001        1011        013
   252     170    10101010        0111        007
   253     171    10101011        1111        017        LCLK
   254     172    10101100        0111        007
   255     173    10101101        1011        013
   256     174    10101110        0111        007
   257     175    10101111        1110        016
   260     176    10110000        0111        007
   261     177    10110001        1011        013
   262     178    10110010        0111        007
   263     179    10110011        1111        017        LCLK
   264     180    10110100        0111        007
   265     181    10110101        1011        013
   266     182    10110110        0111        007
   267     183    10110111        1101        015
   270     184    10111000        0111        007
   271     185    10111001        1011        013
   272     186    10111010        0111        007
   273     187    10111011        1111        017
   274     188    10111100        0111        007
   275     189    10111101        1011        013
   276     190    10111110        0111        007
   277     191    10111111        1111        017
                  ********
                  ********/( A(PIN #05) IS  CONC BR 07 (1)L
                  *******/( B(PIN #06) IS  CONC BR 06 (1)L
                  *****/( C(PIN #07) IS  CONI LCLK INT L
                  ****/( D(PIN #04) IS  CONC BR 05 (1)L
                  ***/( E(PIN #03) IS  CONC BR 04 (1)L
                  **/( F(PIN #02) IS  DPE PSW 07 (0)H
                  */( G(PIN #01) IS  DPE PSW 06 (0)H
                  /( H(PIN #15) IS  DPE PSW 05 (0)H
```

9

```
                                  /( #Y4 (PIN # 9) CONC SET BG 07 L
                                  */( #Y3 (PIN #10) CONC SET BG 06 L
                                  **/( #Y2 (PIN #11) CONC SET BG 05 L
                                  ***/( #Y1 (PIN #12) CONC SET BG 04 L
  OCTAL DECIMAL                   ****          OCTAL
ADDRESS ADDRESS   HGFEDCBA        ****          DATA
    300     192   11000000        0111          007
    301     193   11000001        1011          013
    302     194   11000010        0111          007
    303     195   11000011        1111          017        LCLK
    304     196   11000100        0111          007
    305     197   11000101        1011          013
    306     198   11000110        0111          007
    307     199   11000111        1101          015
    310     200   11001000        0111          007
    311     201   11001001        1011          013
    312     202   11001010        0111          007
    313     203   11001011        1111          017        LCLK
    314     204   11001100        0111          007
    315     205   11001101        1011          013
    316     206   11001110        0111          007
    317     207   11001111        1111          017
    320     208   11010000        0111          007
    321     209   11010001        1011          013
    322     210   11010010        0111          007
    323     211   11010011        1111          017        LCLK
    324     212   11010100        0111          007
    325     213   11010101        1011          013
    326     214   11010110        0111          007
    327     215   11010111        1101          015
    330     216   11011000        0111          007
    331     217   11011001        1011          013
    332     218   11011010        0111          007
    333     219   11011011        1111          017
    334     220   11011100        0111          007
    335     221   11011101        1011          013
    336     222   11011110        0111          007
    337     223   11011111        1111          017
```

M7261-8 REV A

9 CONT

```
    340     224   11100000        0111          007
    341     225   11100001        1011          013
    342     226   11100010        0111          007
    343     227   11100011        1111          017        LCLK
    344     228   11100100        0111          007
    345     229   11100101        1011          013
    346     230   11100110        0111          007
    347     231   11100111        1101          015
    350     232   11101000        0111          007
    351     233   11101001        1011          013
    352     234   11101010        0111          007
    353     235   11101011        1111          017        LCLK
    354     236   11101100        0111          007
    355     237   11101101        1011          013
    356     238   11101110        0111          007
    357     239   11101111        1110          016
    360     240   11110000        0111          007
    361     241   11110001        1011          013
    362     242   11110010        0111          007
    363     243   11110011        1111          017        LCLK
    364     244   11110100        0111          007
    365     245   11110101        1011          013
    366     246   11110110        0111          007
    367     247   11110111        1101          015
    370     248   11111000        0111          007
    371     249   11111001        1011          013
    372     250   11111010        0111          007
    373     251   11111011        1111          017
    374     252   11111100        0111          007
    375     253   11111101        1011          013
    376     254   11111110        0111          007
    377     255   11111111        1111          017
                  ********
                  *******/( A(PIN #05) IS  CONC BR 07 (1)L
                  ******/( B(PIN #06) IS  CONC BR 06 (1)L
                  *****/( C(PIN #07) IS  CONI LCLK INT L
                  ****/( D(PIN #04) IS  CONC BR 05 (1)L
                  ***/( E(PIN #03) IS  CONC BR 04 (1)L
                  **/( F(PIN #02) IS  DPE PSW 07 (0)H
                  */( G(PIN #01) IS  DPE PSW 06 (0)H
                  /( H(PIN #15) IS  DPE PSW 05 (0)H
```

~~1/1 of 28~~

10

```
                                  /( =Y4 (PIN # 9) Y4
                                  */( =Y3 (PIN #10) Y3
                                  **/( =Y2 (PIN #11) Y2
                                  ***/( =Y1 (PIN #12) Y1
 OCTAL DECIMAL                    ****        OCTAL
ADDRESS ADDRESS   HGFEDCBA        ****        DATA
   000       0    00000000        0000        000
   001       1    00000001        0000        000
   002       2    00000010        0000        000
   003       3    00000011        0000        000
   004       4    00000100        0000        000
   005       5    00000101        0000        000
   006       6    00000110        0000        000
   007       7    00000111        0000        000
   010       8    00001000        0000        000
   011       9    00001001        0000        000
   012      10    00001010        0000        000
   013      11    00001011        0000        000
   014      12    00001100        0000        000
   015      13    00001101        0000        000
   016      14    00001110        0000        000
   017      15    00001111        0000        000
   020      16    00010000        0000        000
   021      17    00010001        0000        000
   022      18    00010010        0000        000
   023      19    00010011        0000        000
   024      20    00010100        0000        000
   025      21    00010101        0000        000
   026      22    00010110        0000        000
   027      23    00010111        0000        000
   030      24    00011000        0000        000
   031      25    00011001        0000        000
   032      26    00011010        0000        000
   033      27    00011011        0000        000
   034      28    00011100        0000        000
   035      29    00011101        0000        000
   036      30    00011110        0000        000
   037      31    00011111        0000        000
```

M7261-8 REV A

```
   040      32    00100000        0000        000
   041      33    00100001        0000        000
   042      34    00100010        0000        000
   043      35    00100011        0000        000
   044      36    00100100        0000        000
   045      37    00100101        0000        000
   046      38    00100110        0000        000
   047      39    00100111        0000        000
   050      40    00101000        0000        000
   051      41    00101001        0000        000
   052      42    00101010        0000        000
   053      43    00101011        0000        000
   054      44    00101100        0000        000
   055      45    00101101        0000        000
   056      46    00101110        0000        000
   057      47    00101111        0000        000
   060      48    00110000        0000        000
   061      49    00110001        0000        000
   062      50    00110010        0000        000
   063      51    00110011        0000        000
   064      52    00110100        0000        000
   065      53    00110101        0000        000
   066      54    00110110        0000        000
   067      55    00110111        0000        000
   070      56    00111000        0000        000
   071      57    00111001        0000        000
   072      58    00111010        0000        000
   073      59    00111011        0000        000
   074      60    00111100        0000        000
   075      61    00111101        0000        000
   076      62    00111110        0000        000
   077      63    00111111        0000        000
                  ********
                  ********/( A(PIN #05) IS  CONA BA 02 (1)H
                  ******/( B(PIN #06) IS  CONA BA 01 (1)H
                  *****/( C(PIN #07) IS  CONA BA 00 (1)H
                  ****/( D(PIN #04) IS  CONA BA 03 (1)H
                  ***/( E(PIN #03) IS  CONA BA 04 (1)H
                  **/( F(PIN #02) IS  CONA BA 05 (1)H
                  */( G(PIN #01) IS  CONA BA 07 (1)H
                  /( H(PIN #15) IS  CONA BA 06 (1)H
```

~~2/1 of 28~~

10

```
                                  /( #Y4 (PIN # 9) Y4
                                  */( #Y3 (PIN #10) Y3
                                  **/( #Y2 (PIN #11) Y2
                                  ***/( #Y1 (PIN #12) Y1
 OCTAL DECIMAL                    ****          OCTAL
ADDRESS ADDRESS   HGFEDCBA        ****          DATA
   100      64    01000000        0000          000
   101      65    01000001        0000          000
   102      66    01000010        0000          000
   103      67    01000011        0000          000
   104      68    01000100        0000          000
   105      69    01000101        0000          000
   106      70    01000110        0000          000
   107      71    01000111        0000          000
   110      72    01001000        0000          000
   111      73    01001001        0000          000
   112      74    01001010        0000          000
   113      75    01001011        0000          000
   114      76    01001100        0000          000
   115      77    01001101        0000          000
   116      78    01001110        0000          000
   117      79    01001111        0000          000
   120      80    01010000        0000          000
   121      81    01010001        0000          000
   122      82    01010010        0000          000
   123      83    01010011        0000          000
   124      84    01010100        0000          000
   125      85    01010101        0000          000
   126      86    01010110        0000          000
   127      87    01010111        0000          000
   130      88    01011000        0000          000
   131      89    01011001        0000          000
   132      90    01011010        0000          000
   133      91    01011011        0000          000
   134      92    01011100        0000          000
   135      93    01011101        0000          000
   136      94    01011110        0000          000
   137      95    01011111        0000          000
```

M7261-8 REV A

```
   140     96     01100000        0000          000
   141     97     01100001        0000          000
   142     98     01100010        0000          000
   143     99     01100011        0000          000
   144    100     01100100        0000          000
   145    101     01100101        0000          000
   146    102     01100110        0000          000
   147    103     01100111        0000          000
   150    104     01101000        0000          000
   151    105     01101001        0000          000
   152    106     01101010        0000          000
   153    107     01101011        0000          000
   154    108     01101100        0000          000
   155    109     01101101        0000          000
   156    110     01101110        0000          000
   157    111     01101111        0000          000
   160    112     01110000        0000          000
   161    113     01110001        0000          000
   162    114     01110010        0000          000
   163    115     01110011        0000          000
   164    116     01110100        0000          000
   165    117     01110101        0000          000
   166    118     01110110        0000          000
   167    119     01110111        0000          000
   170    120     01111000        0000          000
   171    121     01111001        0000          000
   172    122     01111010        0000          000
   173    123     01111011        0000          000
   174    124     01111100        0000          000
   175    125     01111101        0000          000
   176    126     01111110        0000          000
   177    127     01111111        0000          000
                  ********
                  ********/( A(PIN #05) IS  CONA BA 02 (1)H
                  *******/( B(PIN #06) IS  CONA BA 01 (1)H
                  ******/( C(PIN #07) IS  CONA BA 00 (1)H
                  *****/( D(PIN #04) IS  CONA BA 03 (1)H
                  ****/( E(PIN #03) IS  CONA BA 04 (1)H
                  ***/( F(PIN #02) IS  CONA BA 05 (1)H
                  **/( G(PIN #01) IS  CONA BA 07 (1)H
                  */( H(PIN #15) IS  CONA BA 06 (1)H
```

```
                                  /( #Y4 (PIN # 9) Y4
                                  */( #Y3 (PIN #10) Y3
                                  **/( #Y2 (PIN #11) Y2
                                  ***/( #Y1 (PIN #12) Y1
                                  ****          OCTAL
 OCTAL DECIMAL                    ****          DATA
ADDRESS ADDRESS   HGFEDCBA        ****
   200     128    10000000        0000          000
   201     129    10000001        0000          000
   202     130    10000010        0000          000
   203     131    10000011        0000          000
   204     132    10000100        0000          000
   205     133    10000101        0000          000
   206     134    10000110        0000          000
   207     135    10000111        0000          000
   210     136    10001000        0000          000
   211     137    10001001        0000          000
   212     138    10001010        0000          000
   213     139    10001011        0000          000
   214     140    10001100        0000          000
   215     141    10001101        0000          000
   216     142    10001110        0000          000
   217     143    10001111        0000          000
   220     144    10010000        0000          000
   221     145    10010001        0000          000
   222     146    10010010        0000          000
   223     147    10010011        0000          000
   224     148    10010100        0000          000
   225     149    10010101        0000          000
   226     150    10010110        0000          000
   227     151    10010111        0000          000
   230     152    10011000        0000          000
   231     153    10011001        0000          000
   232     154    10011010        0000          000
   233     155    10011011        0000          000
   234     156    10011100        0000          000
   235     157    10011101        0000          000
   236     158    10011110        0000          000
   237     159    10011111        0000          000
```

17 OF 27

12

M7261-8 REV A

```
   240     160    10100000        0000          000
   241     161    10100001        0000          000
   242     162    10100010        0000          000
   243     163    10100011        0110          006        KW11=L LINE CLK CSR
   244     164    10100100        0000          000
   245     165    10100101        0000          000
   246     166    10100110        0000          000
   247     167    10100111        0101          005        KW11=L (ODD BYTE)
   250     168    10101000        0000          000
   251     169    10101001        0000          000
   252     170    10101010        0000          000
   253     171    10101011        0000          000
   254     172    10101100        0000          000
   255     173    10101101        0000          000
   256     174    10101110        0000          000
   257     175    10101111        0000          000
   260     176    10110000        1000          010        TKS TTY KEYBOARD CSR
   261     177    10110001        1100          014        TPS PRINTER CSR
   262     178    10110010        1010          012        TKB TTY KEYBOARD  DBR
   263     179    10110011        1110          016        TPB TTY PRINTER DBR
   264     180    10110100        0101          005        TKS (ODD BYTE)
   265     181    10110101        0101          005        TPS (ODD BYTE)
   266     182    10110110        0101          005        TKB (ODD BYTE)
   267     183    10110111        0101          005        TPB (ODD BYTE)
   270     184    10111000        0111          007        SWITCH REGISTER
   271     185    10111001        0000          000
   272     186    10111010        0000          000
   273     187    10111011        0000          000
   274     188    10111100        0111          007        CONSOLE SW REG', (ODD BYTE)
   275     189    10111101        0000          000
   276     190    10111110        0000          000
   277     191    10111111        0000          000
                  ********
                  ********/( A(PIN #05) IS  CONA BA 02 (1)H
                  *******/( B(PIN #06) IS  CONA BA 01 (1)H
                  ******/( C(PIN #07) IS  CONA BA 00 (1)H
                  *****/( D(PIN #04) IS  CONA BA 03 (1)H
                  ****/( E(PIN #03) IS  CONA BA 04 (1)H
                  ***/( F(PIN #02) IS  CONA BA 05 (1)H
                  **/( G(PIN #01) IS  CONA BA 07 (1)H
                  */( H(PIN #15) IS  CONA BA 06 (1)H
```

12 CONT

```
                                  /( =Y4 (PIN # 9) Y4
                                  */( =Y3 (PIN #10) Y3
                                  **/( =Y2 (PIN #11) Y2
                                  ***/( =Y1 (PIN #12) Y1
 OCTAL DECIMAL                    ****          OCTAL
ADDRESS ADDRESS   HGFEDCBA        ****          DATA
   300     192    11000000        0001          001        REG R0
   301     193    11000001        0001          001        REG R4
   302     194    11000010        0001          001        REG R2
   303     195    11000011        0001          001        REG R6
   304     196    11000100        0001          001        REG R1
   305     197    11000101        0001          001        REG R5
   306     198    11000110        0001          001        REG R3
   307     199    11000111        0001          001        REG R7
   310     200    11001000        0001          001        REG R10
   311     201    11001001        0001          001        REG R14
   312     202    11001010        0001          001        REG R12
   313     203    11001011        0001          001        REG R16
   314     204    11001100        0001          001        REG R11
   315     205    11001101        0001          001        REG R15
   316     206    11001110        0001          001        REG R13
   317     207    11001111        0001          001        REG R17
   320     208    11010000        0000          000
   321     209    11010001        0000          000
   322     210    11010010        0000          000
   323     211    11010011        0000          000
   324     212    11010100        0000          000
   325     213    11010101        0000          000
   326     214    11010110        0000          000
   327     215    11010111        0000          000
   330     216    11011000        0000          000
   331     217    11011001        0000          000
   332     218    11011010        0000          000
   333     219    11011011        0000          000
   334     220    11011100        0000          000
   335     221    11011101        0000          000
   336     222    11011110        0000          000
   337     223    11011111        0000          000
```

13

M7261-8 REV A

```
   340     224    11100000        0000          000
   341     225    11100001        0000          000
   342     226    11100010        0000          000
   343     227    11100011        0000          000
   344     228    11100100        0000          000
   345     229    11100101        0000          000
   346     230    11100110        0000          000
   347     231    11100111        0000          000
   350     232    11101000        0000          000
   351     233    11101001        0000          000
   352     234    11101010        0000          000
   353     235    11101011        0000          000
   354     236    11101100        0000          000
   355     237    11101101        0000          000
   356     238    11101110        0000          000
   357     239    11101111        0000          000
   360     240    11110000        0000          000
   361     241    11110001        0000          000
   362     242    11110010        0000          000
   363     243    11110011        0000          000
   364     244    11110100        0000          000
   365     245    11110101        0000          000
   366     246    11110110        0000          000
   367     247    11110111        0000          000
   370     248    11111000        0000          000
   371     249    11111001        0000          000
   372     250    11111010        0000          000
   373     251    11111011        0010          002        PSW
   374     252    11111100        0000          000
   375     253    11111101        0000          000
   376     254    11111110        0000          000
   377     255    11111111        0010          002        PSW (ODD BYTE)
                  ********
                  *******/( A(PIN #05) IS  CONA BA 02 (1)H
                  ******/( B(PIN #06) IS  CONA BA 01 (1)H
                  *****/( C(PIN #07) IS  CONA BA 00 (1)H
                  ****/( D(PIN #04) IS  CONA BA 03 (1)H
                  ***/( E(PIN #03) IS  CONA BA 04 (1)H
                  **/( F(PIN #02) IS  CONA BA 05 (1)H
                  */( G(PIN #01) IS  CONA BA 07 (1)H
                  /( H(PIN #15) IS  CONA BA 06 (1)H
```

13 CONT

```
                                  /( =Y4 (PIN # 9) CONF MPC 04 L
                                  */( =Y3 (PIN #10) CONF MPC 01 L
                                  **/( =Y2 (PIN #11) CONF MPC 02 L
                                  ***/( =Y1 (PIN #12) CONF MPC 00 L
 OCTAL DECIMAL                    ****        OCTAL
ADDRESS ADDRESS   HGFEDCBA        ****        DATA
   000       0    00000000        1100        014       T
   001       1    00000001        1100        014       T
   002       2    00000010        1100        014       T
   003       3    00000011        1100        014       T
   004       4    00000100        1100        014       T
   005       5    00000101        1100        014       T
   006       6    00000110        1100        014       T
   007       7    00000111        1100        014       T
   010       8    00001000        1100        014       T
   011       9    00001001        1100        014       T
   012      10    00001010        1100        014       T
   013      11    00001011        1100        014       T
   014      12    00001100        1100        014       T
   015      13    00001101        1100        014       T
   016      14    00001110        1100        014       T
   017      15    00001111        1100        014       T
   020      16    00010000        1100        014       T
   021      17    00010001        1100        014       T
   022      18    00010010        1100        014       T
   023      19    00010011        1100        014       T
   024      20    00010100        1100        014       T
   025      21    00010101        1100        014       T
   026      22    00010110        1100        014       T
   027      23    00010111        1100        014       T
   030      24    00011000        1100        014       T
   031      25    00011001        1100        014       T
   032      26    00011010        1100        014       T
   033      27    00011011        1100        014       T
   034      28    00011100        1100        014       T
   035      29    00011101        1100        014       T
   036      30    00011110        1100        014       T
   037      31    00011111        1100        014       T
```

14

M7261-8 REV A

```
   040      32    00100000        1100        014       T
   041      33    00100001        1100        014       T
   042      34    00100010        1100        014       T
   043      35    00100011        1100        014       T
   044      36    00100100        1100        014       T
   045      37    00100101        1100        014       T
   046      38    00100110        1100        014       T
   047      39    00100111        1100        014       T
   050      40    00101000        1100        014       T
   051      41    00101001        1100        014       T
   052      42    00101010        1100        014       T
   053      43    00101011        1100        014       T
   054      44    00101100        1100        014       T
   055      45    00101101        1100        014       T
   056      46    00101110        1100        014       T
   057      47    00101111        1100        014       T
   060      48    00110000        1100        014       T
   061      49    00110001        1100        014       T
   062      50    00110010        1100        014       T
   063      51    00110011        1100        014       T
   064      52    00110100        1100        014       T
   065      53    00110101        1100        014       T
   066      54    00110110        1100        014       T
   067      55    00110111        1100        014       T
   070      56    00111000        1100        014       T
   071      57    00111001        1100        014       T
   072      58    00111010        1100        014       T
   073      59    00111011        1100        014       T
   074      60    00111100        1100        014       T
   075      61    00111101        1100        014       T
   076      62    00111110        1100        014       T
   077      63    00111111        1100        014       T
                  ********
                  *******/( A(PIN #05) IS  CONB STACKFLOW (1)L
                  ******/( B(PIN #06) IS  CONH PDWN SYNC (1)L
                  *****/( C(PIN #07) IS  CONI LCLK INT (1)L
                  ****/( D(PIN #04) IS  CONE STOP (1)L
                  ***/( E(PIN #03) IS  DPH RCD INT (1)L
                  **/( F(PIN #02) IS  DPH XMIT INT (1)L
                  */( G(PIN #01) IS  DPG WAIT L
                  /( H(PIN #15) IS  DPE T DEL (1)L
```

14 Cont

```
                                  /( BY4 (PIN # 9) CONF MPC 04 L
                                  */( BY3 (PIN #10) CONF MPC 01 L
                                  **/( BY2 (PIN #11) CONF MPC 02 L
                                  ***/( BY1 (PIN #12) CONF MPC 00 L
 OCTAL DECIMAL                    ****        OCTAL
ADDRESS ADDRESS   HGFEDCBA        ****        DATA
   100      64   01000000        1100        014        T
   101      65   01000001        1100        014        T
   102      66   01000010        1100        014        T
   103      67   01000011        1100        014        T
   104      68   01000100        1100        014        T
   105      69   01000101        1100        014        T
   106      70   01000110        1100        014        T
   107      71   01000111        1100        014        T
   110      72   01001000        1100        014        T
   111      73   01001001        1100        014        T
   112      74   01001010        1100        014        T
   113      75   01001011        1100        014        T
   114      76   01001100        1100        014        T
   115      77   01001101        1100        014        T
   116      78   01001110        1100        014        T
   117      79   01001111        1100        014        T
   120      80   01010000        1100        014        T
   121      81   01010001        1100        014        T
   122      82   01010010        1100        014        T
   123      83   01010011        1100        014        T
   124      84   01010100        1100        014        T
   125      85   01010101        1100        014        T
   126      86   01010110        1100        014        T
   127      87   01010111        1100        014        T
   130      88   01011000        1100        014        T
   131      89   01011001        1100        014        T
   132      90   01011010        1100        014        T
   133      91   01011011        1100        014        T
   134      92   01011100        1100        014        T
   135      93   01011101        1100        014        T
   136      94   01011110        1100        014        T
   137      95   01011111        1100        014        T
```

~~A3 - 06~~

15

M7261-8 REV A

```
   140      96   01100000        1100        014        T
   141      97   01100001        1100        014        T
   142      98   01100010        1100        014        T
   143      99   01100011        1100        014        T
   144     100   01100100        1100        014        T
   145     101   01100101        1100        014        T
   146     102   01100110        1100        014        T
   147     103   01100111        1100        014        T
   150     104   01101000        1100        014        T
   151     105   01101001        1100        014        T
   152     106   01101010        1100        014        T
   153     107   01101011        1100        014        T
   154     108   01101100        1100        014        T
   155     109   01101101        1100        014        T
   156     110   01101110        1100        014        T
   157     111   01101111        1100        014        T
   160     112   01110000        1100        014        T
   161     113   01110001        1100        014        T
   162     114   01110010        1100        014        T
   163     115   01110011        1100        014        T
   164     116   01110100        1100        014        T
   165     117   01110101        1100        014        T
   166     118   01110110        1100        014        T
   167     119   01110111        1100        014        T
   170     120   01111000        1100        014        T
   171     121   01111001        1100        014        T
   172     122   01111010        1100        014        T
   173     123   01111011        1100        014        T
   174     124   01111100        1100        014        T
   175     125   01111101        1100        014        T
   176     126   01111110        1100        014        T
   177     127   01111111        1100        014        T
                 ********
                 *******/( A(PIN #05) IS  CONB STACKFLOW (1)L
                 ******/( B(PIN #06) IS  CONH PDWN SYNC (1)L
                 *****/( C(PIN #07) IS  CONI LCLK INT (1)L
                 ****/( D(PIN #04) IS  CONE STOP (1)L
                 ***/( E(PIN #03) IS  DPH RCD INT (1)L
                 **/( F(PIN #02) IS  DPH XMIT INT (1)L
                 */( G(PIN #01) IS  DPG WAIT L
                 /( H(PIN #15) IS  DPE T DEL (1)L
```

~~A4 - 06~~

15 CONT

```
                                  /( BYS (PIN # 0) CONF MPC 04 L
                                  */( BYS (PIN #10) CONF MPC 01 L
                                  **/( BYS (PIN #11) CONF MPC 02 L
                                  ***/( BYS (PIN #12) CONF MPC 03 L
ADDRESS ADDRESS                   ACTUAL
OCTAL   DECIMAL                   DATA
000     128     10000000          0001      011       STKFL
001     129     10000001          0010      012       PWRF
002     130     10000010          0001      011       STKFL
003     131     10000011          1011      013       LCLK
004     132     10000100          0001      011       STKFL
005     133     10000101          0010      012       PWRF
006     134     10000110          0001      011       STKFL
007     135     10000111          0101      005       RCD
010     136     10001000          0001      011       STKFL
011     137     10001001          0010      012       PWRF
012     138     10001010          0001      011       STKFL
013     139     10001011          1011      013       LCLK
014     140     10001100          0001      011       STKFL
015     141     10001101          0010      012       PWRF
016     142     10001110          0001      011       STKFL
017     143     10001111          0101      005       RCD
020     144     10010000          0001      011       STKFL
021     145     10010001          0010      012       PWRF
022     146     10010010          0001      011       STKFL
023     147     10010011          1011      013       LCLK
024     148     10010100          0001      011       STKFL
025     149     10010101          0010      012       PWRF
026     150     10010110          0001      011       STKFL
027     151     10010111          0111      007       XMIT
030     152     10011000          0001      011       STKFL
031     153     10011001          0010      012       PWRF
032     154     10011010          0001      011       STKFL
033     155     10011011          1011      013       LCLK
034     156     10011100          0001      011       STKFL
035     157     10011101          0010      012       PWRF
036     158     10011110          0001      011       STKFL
037     159     10011111          0111      007       XMIT
```

16

M7261-8 REV A

```
040     160     10100000                    11        STKFL
041     161     10100001                    012       PWRF
042     162     10100010          1001      011       STKFL
043     163     10100011          1011      013       LCLK
044     164     10100100          1001      011       STKFL
045     165     10100101          1010      012       PWRF
046     166     10100110          1001      011       STKFL
047     167     10100111          0101      005       RCD
050     168     10101000          1001      011       STKFL
051     169     10101001          1010      012       PWRF
052     170     10101010          1001      011       STKFL
053     171     10101011          1011      013       LCLK
054     172     10101100          1001      011       STKFL
055     173     10101101          1010      012       PWRF
056     174     10101110          1001      011       STKFL
057     175     10101111          0101      005       RCD
060     176     10110000          1001      011       STKFL
061     177     10110001          1010      012       PWRF
062     178     10110010          1001      011       STKFL
063     179     10110011          1011      013       LCLK
064     180     10110100          1001      011       STKFL
065     181     10110101          1010      012       PWRF
066     182     10110110          1001      011       STKFL
067     183     10110111          1110      016       STOP
070     184     10111000          1001      011       STKFL
071     185     10111001          1010      012       PWRF
072     186     10111010          1001      011       STKFL
073     187     10111011          1011      013       LCLK
074     188     10111100          1001      011       STKFL
075     189     10111101          1010      012       PWRF
076     190     10111110          1001      011       STKFL
077     191     10111111          0010      002       WAIT
                ********
                ********/( A(PIN #05) IS  CONB STACKFLOW (1)L
                *******/( B(PIN #06) IS  CONH POWN SYNC (1)L
                ******/( C(PIN #07) IS  CONI LCLK INT (1)L
                *****/( D(PIN #08) IS  CONE STOP (1)L
                ****/( E(PIN #09) IS  DPH RCD INT (1)L
                ***/( F(PIN #02) IS  DPH XMIT INT (1)L
                **/( G(PIN #01) IS  DPG WAIT L
                */( H(PIN #15) IS  DPE T DEL (1)L
```

26 04

16 C

```
                                  /( BV4 (PIN # 9) CONF MPC 04 L
                                  */( BV3 (PIN #10) CONF MPC 01 L
                                  **/( BV2 (PIN #11) CONF MPC 02 L
                                  ***/( BV1 (PIN #12) CONF MPC 00 L
 OCTAL DECIMAL                    ****          OCTAL
ADDRESS ADDRESS   HGFEDCBA        ****          DATA
    300     192   11000000        1001          011     STKFL
    301     193   11000001        1010          012     PWRF
    302     194   11000010        1001          011     STKFL
    303     195   11000011        1011          013     LCLK
    304     196   11000100        1001          011     STKFL
    305     197   11000101        1010          012     PWRF
    306     198   11000110        1001          011     STKFL
    307     199   11000111        0101          005     RCD
    310     200   11001000        1001          011     STKFL
    311     201   11001001        1010          012     PWRF
    312     202   11001010        1001          011     STKFL
    313     203   11001011        1011          013     LCLK
    314     204   11001100        1001          011     STKFL
    315     205   11001101        1010          012     PWRF
    316     206   11001110        1001          011     STKFL
    317     207   11001111        0101          005     RCD
    320     208   11010000        1001          011     STKFL
    321     209   11010001        1010          012     PWRF
    322     210   11010010        1001          011     STKFL
    323     211   11010011        1011          013     LCLK
    324     212   11010100        1001          011     STKFL
    325     213   11010101        1010          012     PWRF
    326     214   11010110        1001          011     STKFL
    327     215   11010111        0111          007     XMIT
    330     216   11011000        1001          011     STKFL
    331     217   11011001        1010          012     PWRF
    332     218   11011010        1001          011     STKFL
    333     219   11011011        1011          013     LCLK
    334     220   11011100        1001          011     STKFL
    335     221   11011101        1010          012     PWRF
    336     222   11011110        1001          011     STKFL
    337     223   11011111        0111          007     XMIT
```

~~27~~ ~~OCT 27~~

17

M7261-8 REV A

```
    340     224   11100000        1001          011     STKFL
    341     225   11100001        1010          012     PWRF
    342     226   11100010        1001          011     STKFL
    343     227   11100011        1011          013     LCLK
    344     228   11100100        1001          011     STKFL
    345     229   11100101        1010          012     PWRF
    346     230   11100110        1001          011     STKFL
    347     231   11100111        0101          005     RCD
    350     232   11101000        1001          011     STKFL
    351     233   11101001        1010          012     PWRF
    352     234   11101010        1001          011     STKFL
    353     235   11101011        1011          013     LCLK
    354     236   11101100        1001          011     STKFL
    355     237   11101101        1010          012     PWRF
    356     238   11101110        1001          011     STKFL
    357     239   11101111        0101          005     RCD
    360     240   11110000        1001          011     STKFL
    361     241   11110001        1010          012     PWRF
    362     242   11110010        1001          011     STKFL
    363     243   11110011        1011          013     LCLK
    364     244   11110100        1001          011     STKFL
    365     245   11110101        1010          012     PWRF
    366     246   11110110        1001          011     STKFL
    367     247   11110111        1110          016     STOP
    370     248   11111000        1001          011     STKFL
    371     249   11111001
```

~~28 OCT 28~~

17 Oct

digital EQUIPMENT CORPORATION
MAYNARD, MASSACHUSETTS

DRAWING DIRECTORY

CUSTOMER PRINT SET INDEX

	SEQUENCE
MODULE UTILIZATION	D_MU_MM11_L_1
BLOCK DIAGRAM	D_BD_MM11_L 2
TIMING DIAGRAM	D_TD_MM11_L_3
* MEMORY DRIVERS	E_SC_G231_0_1
* CONTROL & DATA LOOPS	E_CS_G110_0_1
STACK SCHEMATIC	E_CS_H213_0_1
STACK SCHEMATIC	E_CS_H214_0_1
BLOCK DIAGRAM	D-BD-MM11-S-2
4K MEMORY	A-PL-MM11-K-0
8K MEMORY	A-PL-MM11-L-0

SEQUENCE

MFG. PRINT SET
MFG. TEST PRO. FOR MM11/K,L,M,S&SP
A-SP-MM11-L-5

THIS IS PRINT SET

UNIT VARIATIONS

VARIATION	TITLE	PRINT SET TYPE: MM11_L
MM11_K	4K 16 BIT 18 MIL MEMORY	X
MM11_L	8K 16 BIT 18 MIL MEMORY	X

* SPECIAL REVISION PRINTS ARE AVAILABLE ON "C" ETCH REV. MODULES.
CARE SHOULD BE TAKEN TO INSURE THAT PROPER PRINTS ARE ORDERED.

REVISIONS

REV	CHG. NO.	DATE
A	MM11L-00001	9/72
B	MM11L-00002	11-72
C	MISC-00107	1-73
D	MISC-00111	2-73
E	MISC-00112	2-73
F	MISC-00113	2-73
H	MM11L- 3	1-74

USED ON OPTION/MODEL
MM11_K
MM11_L

DRN. J. Balaghi	DATE 1-25-72	TITLE 16 BIT 18 MIL MEMORY
CHK'D. J. Balaghi	DATE 1-25-72	
PROJ ENG. R. Durant	DATE 1-25-72	
PROD.	DATE	SIZE B / CODE DD / NUMBER MM11-L / REV H
FIELD SERV.	DATE	
SHEET 1 OF 3		DIST

DRB 106

DEC 16-(325) 1062-1-N871

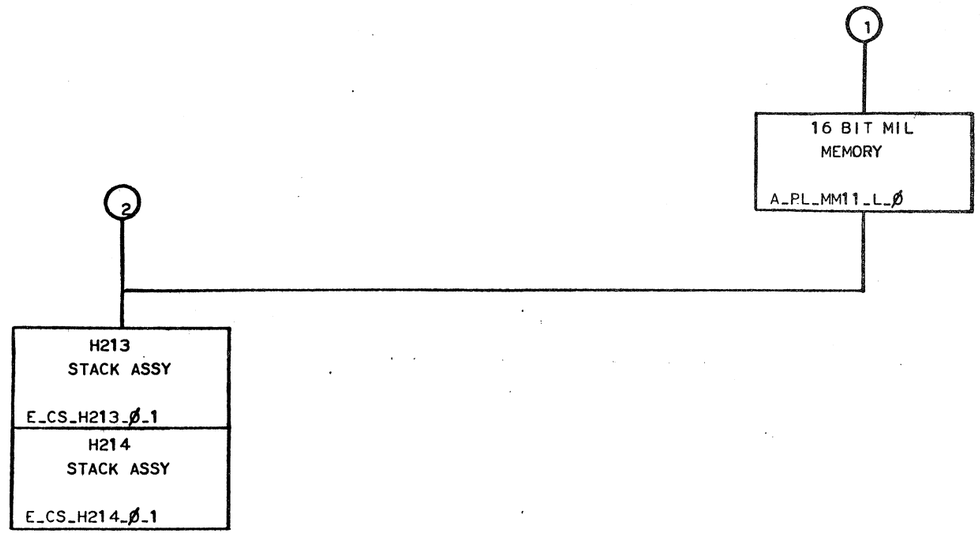

TITLE		SIZE	CODE	NUMBER	REV
16 BIT 18 MIL MEMORY	SHEET 2 OF 3	B	DD	MM11_L	H

DRB 107
DEC 16 (325)-1062-3-N871

ELECTRICAL

CUSTOMER PRINT SET (MM11_L)	MFG SET	FIND NO.	DRAWING NO.	REV	NO OF SHT	DESCRIPTION	OPTION NO.
X		1	D_MU_MM11_L_1	*	1	MODULE UTILIZATION	
X			D_BD_MM11_L_2	*	1	BLOCK DIAGRAM	
X			D_TD_MM11_L_3	*	1	TIMING DIAGRAM	
X			E_CS_G231_Ø_1	#	5	MEMORY DRIVER	
X			E_CS_G11Ø_Ø_1	#	5	CONTROL & DATA LOOPS	
			D-BD-MM11-S-2	#	2	BLOCK DIAGRAM	
			A-PL-MM11-K-0		1	4K MEMORY	
			A-PL-MM11-L-0		1	8K MEMORY	
			A-SP-MM11-1-7	A	4	PRELIM. ENG. SPEC. FOR MM11-K,L	
X		2	E_CS_H213_Ø_1	#	2	STACK SCHEMATIC	
X			E_CS_H214_Ø_1	#	2	STACK SCHEMATIC	
			A-SP-G109-0-8		1	G109,G110 CONT & DATA LOOP MFG. SPEC.	
			A-SP-G231-0-8		1	MEMORY DRIVER MFG. SPEC.	
			A-SP-MM11-L-4		1	MM11-K,-L,-S &-SP MFG. TEST SPEC.	
	X		A-SP-MM11-L-5		29	MFG. TEST PRO. MM11/K,L,M,S & SP	

MECHANICAL

CUSTOMER PRINT SET (MM11_L)	MFG SET	FIND NO.	DRAWING NO.	REV	NO OF SHT	DESCRIPTION	OPTION NO.
		1	A_PL_MM11_L_Ø	*	1	MEMORY	
			A_PS_3010654_0_0			PURCHASE SPEC	
		2	B_DD_H214_Ø_/	#	2	STACK SCHEMATIC	
			B_DD_H213_Ø	#	2	STACK SCHEMATIC	
			A-PL_G645_Ø_-Ø		1	STACK BOARD	

TITLE		SIZE	CODE	NUMBER	REV
16 BIT 18 MIL MEMORY	SHEET 3 OF 3	B	DD	MM11_L	H

DRB 108

DEC 16 (325) 1062-2 N871

PIN SIDE VIEW OF BACKPLANE

THESE 2 SLOTS ARE UNIBUS WIRED ON ALL 3 CONNECTORS

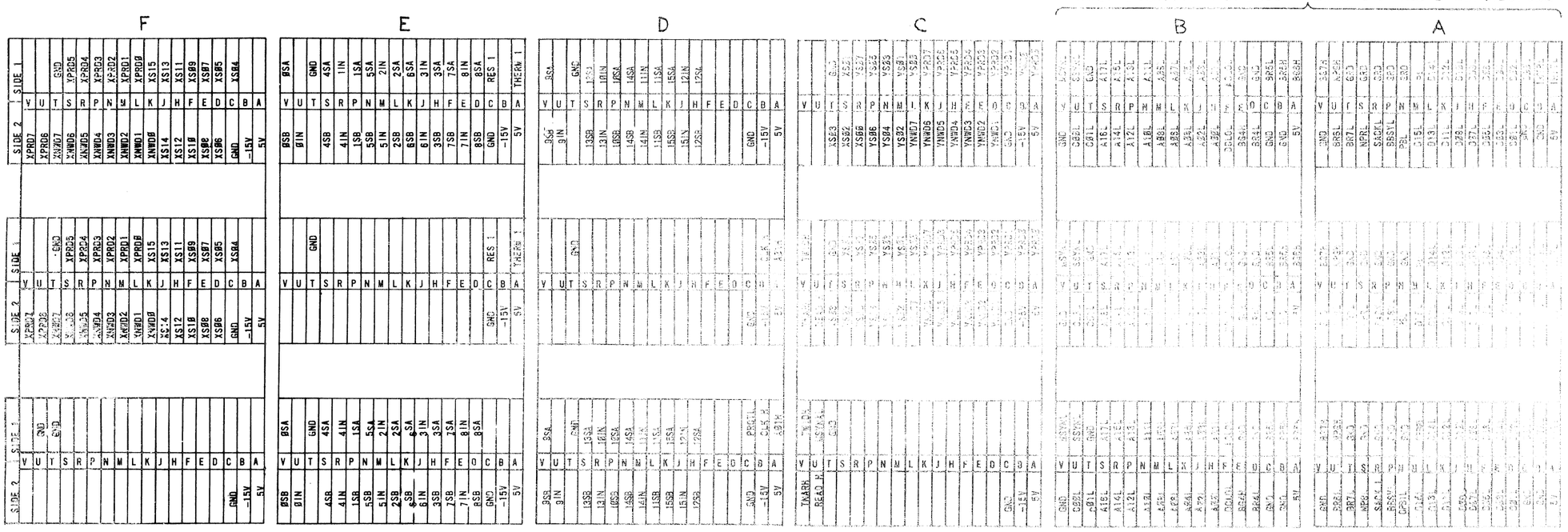

FIRST USED ON OPTION/MODEL	QTY.	DESCRIPTION	PART NO.	ITEM NO.
MMII-L		PARTS LIST		

UNLESS OTHERWISE SPECIFIED DIMENSION IN INCHES. TOLERANCES

DECIMALS	ANGLES
.XXX = .005	±0° 30'
.XX = .02	
.X = .1	

REMOVE BURRS AND BREAK SHARP CORNERS. SURFACE QUALITY ✓

MATERIAL

FINISH

CKD		DATE 1-29-72
CHK'D		DATE 1-29-72
ENG.	P Durant	DATE 1-29-72
PROJ. ENG.	P Durant	DATE 1-25-72
PROD.	R K Peterson	DATE 1-31-72

NEXT HIGHER ASSY. B-DD-MMII-L

SCALE

SHEET OF

DIGITAL EQUIPMENT CORPORATION MAYNARD MASSACHUSETTS

TITLE MODULE UTILIZATION

SIZE	CODE	NUMBER	REV.
D	MU	MMII-L-1	

DIST.

REVISIONS		
CHK	CHANGE NO.	REV

DRAWING 40-532 15M-0

DEC FORM NO DRD 102-B

B-MMII-L-1

NOTES:
*1. ALL ARROWS SHOW SIGNAL FLOW DIRECTION.
**2. MATRIX SHOWN IS FOR ILLUSTRATION ONLY.
***3. ACTUAL MATRIX HAS { Y AXIS 8PRD,8NRD,8SS; X AXIS 4K 8PRD,8NRD,8SS; X AXIS 8K 8PRD,8NRD,16SS }

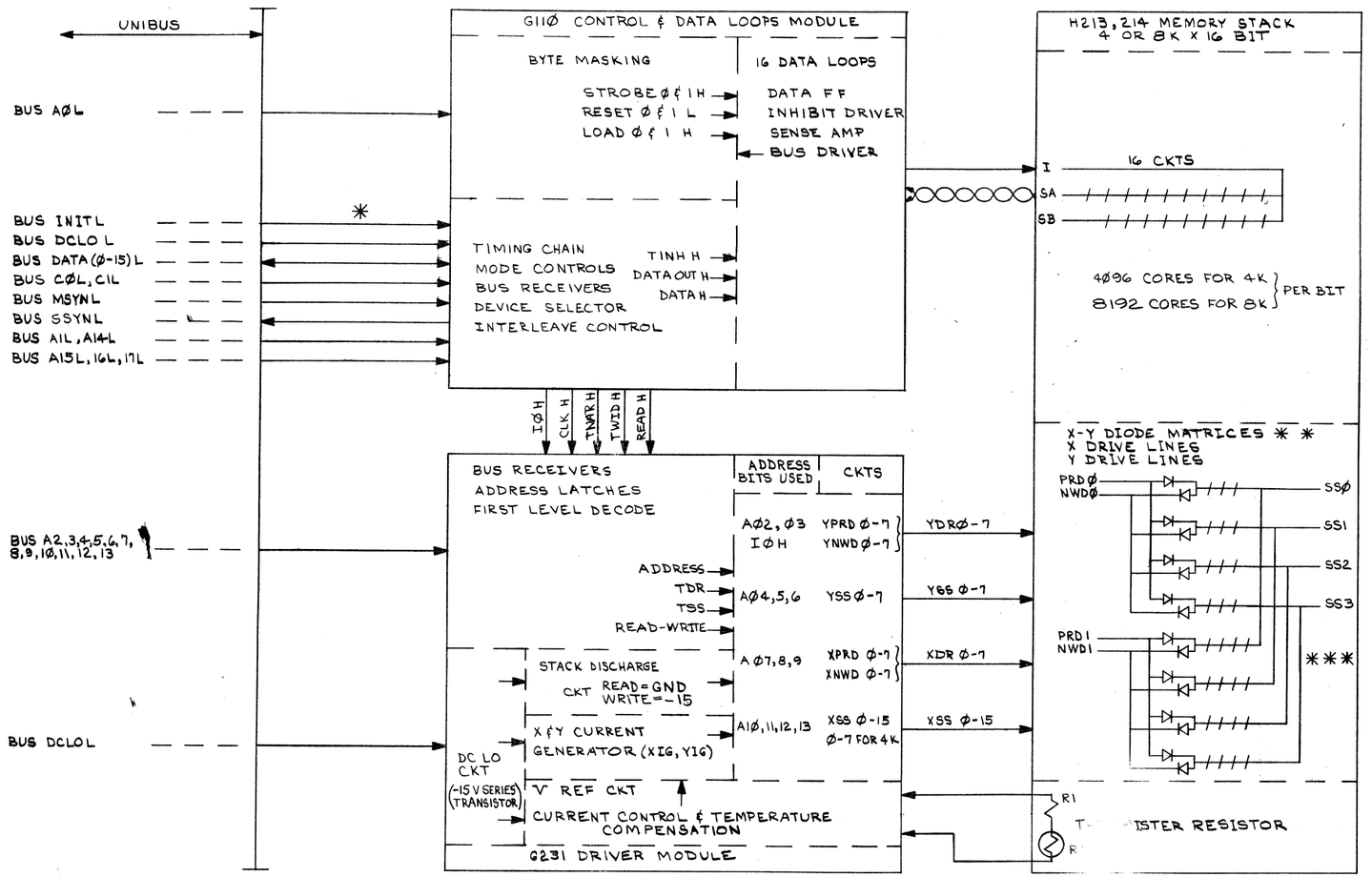

FIRST USED ON OPTION/MODEL	QTY.	DESCRIPTION	PART NO.	ITEM NO.
MM11-L		PARTS LIST		

UNLESS OTHERWISE SPECIFIED DIMENSION IN INCHES. TOLERANCES

DECIMALS	ANGLES
.XXX = .005	±0° 30'
.XX = .02	
.X = .1	

REMOVE BURRS AND BREAK SHARP CORNERS SURFACE QUALITY ✓

MATERIAL —//—

FINISH —//—

		DATE
DRN.	D. Carberry	11/10/71
CHK'D.	F. Valeyh	1-25-72
ENG.	F. Duvant	1-25-71
PROJ. ENG.	F. Duvant	1-25-71
PROD.	R.K. Peterson	1-26-72

NEXT HIGHER ASSY. B-DD-MM11-L

SCALE —//—

SHEET 1 OF 1

digital EQUIPMENT CORPORATION MAYNARD, MASSACHUSETTS

TITLE BLOCK DIAGRAM (MM11-L)

SIZE	CODE	NUMBER	REV.
D	BD	MM11-L-2	

DIST.

REVISIONS: REV. | CHANGE NO. | CHK

D BD MM11-L-2

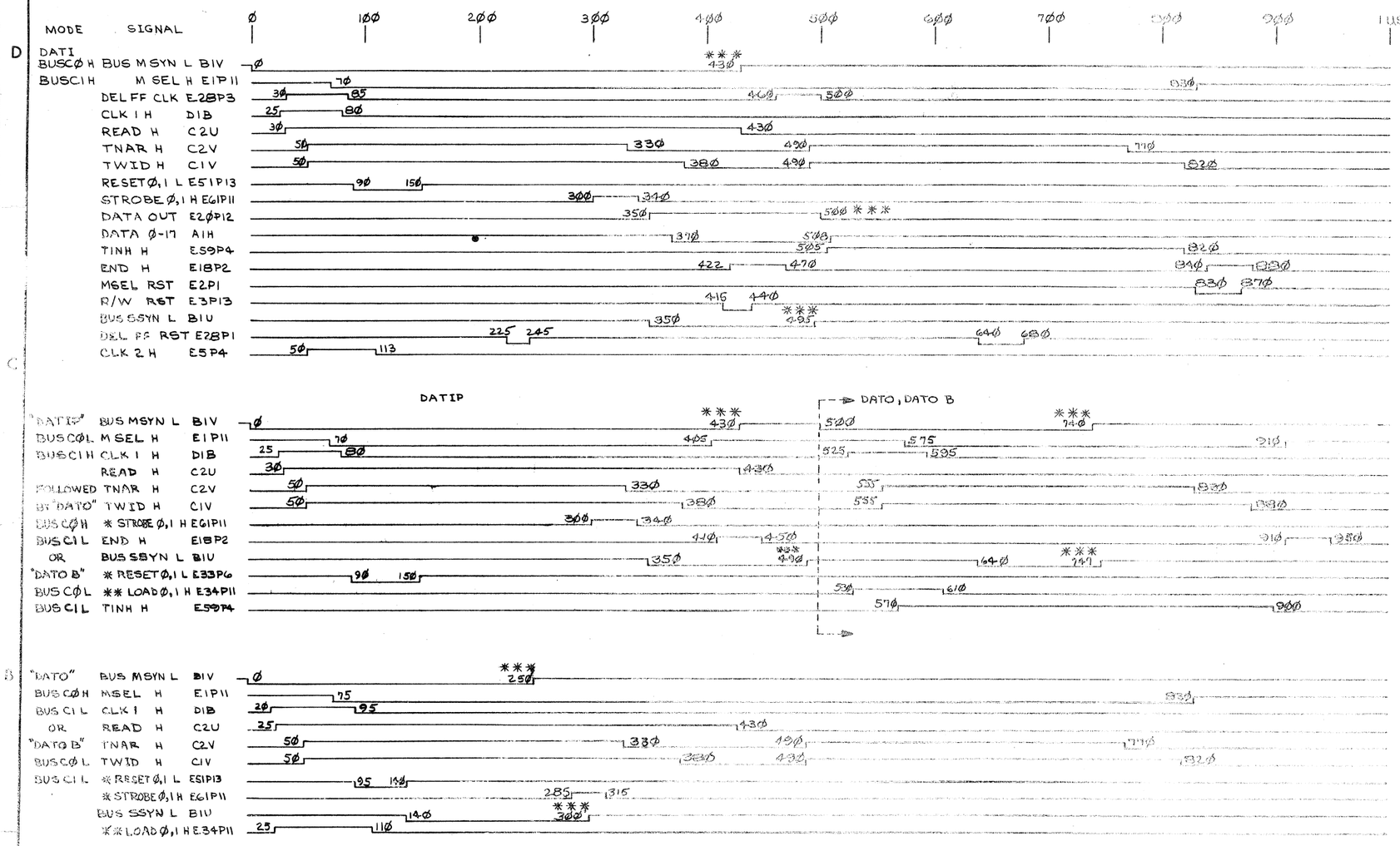

NOTES:

1. ANY SIGNALS NOT SHOWN ON DATIP, DATO OR DATO B ARE AS SHOWN ON DATI TIMING.
* 2. RESET L AND STROBE H DO NOT OCCUR IN DATO MODE. THEY ONLY OCCUR FOR THE BYTE NOT BEING ADDRESSED IN DATO B MODE.
** 3. LOAD H OCCURS FOR BOTH BITS IN DATO MODE AND ONLY FOR THE ADDRESSED BYTE IN THE DATO B MODE.
*** 4. ACTUAL TIME DEPENDS ON BUS AND PROCESSOR DELAYS.
5. ALL SIGNALS ON G109 OR G110 MODULE

FIRST USED ON OPTION/MODEL	QTY.	DESCRIPTION	PART NO.	ITEM NO.
MMII-L		PARTS LIST		

UNLESS OTHERWISE SPECIFIED
DIMENSION IN INCHES.
TOLERANCES

DECIMALS	ANGLES
.XXX = .005 .XX = .02 .X = .1	±0° 30'

REMOVE BURRS AND BREAK SHARP CORNERS SURFACE QUALITY ✓

MATERIAL —//—

FINISH —//—

DRN.		DATE 10/3/71
CHK'D		DATE 1-27-72
ENG.		DATE 1-25-72
PROJ. ENG.		DATE 1-25-72
PROD.		DATE 1-27-72

NEXT HIGHER ASSY. B-DD-MMII-L

SCALE —//—

SHEET 1 OF 1

DIGITAL EQUIPMENT CORPORATION MAYNARD, MASSACHUSETTS

TITLE

TIMING DIAGRAM

(MMII-L, MMII-K)

SIZE	CODE	NUMBER	REV.
D	TD	MMII-L-3	

DISTRIBUTION

REV	CHANGE NO.	CHK
	REVISIONS	

DRAWING 40-522 15840

DEC FORM NO DRD 102-B

NOTES:

1. J5 & J6 SHOULD BE 1.5 INCHES OF INSULATED LOOP.
2. IC4008 TO BE MARKED 4008X OR 4008° ←WHITE DOT

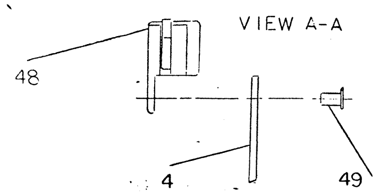

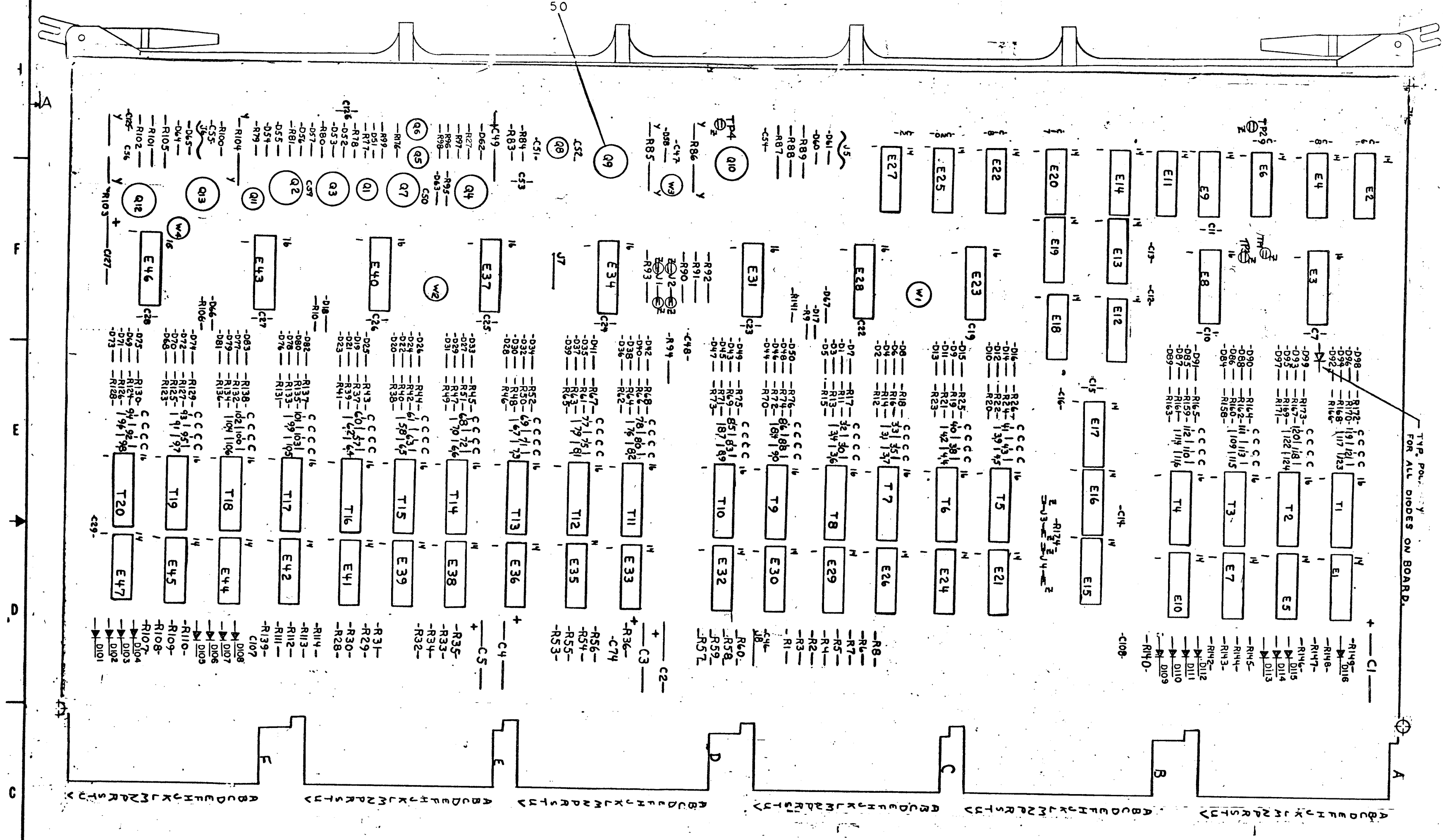

COMPONENT SUBSTITUTION LIST				
ITEM NO.	ORIGINAL PART		SUBSTITUTE PART	
	DESCRIPTION	PART NO.	DESCRIPTION	PART NO
38	IC 4011 QUAD TRANSISTOR	1511102	IC 4008 QUAD TRANSISTOR	1510015 *
42	IC 1074H00	1910462	IC 74H00	1909056*
44	IC 1074H04	1910463	IC 74H04	1909931 *

SEE NOTE 2

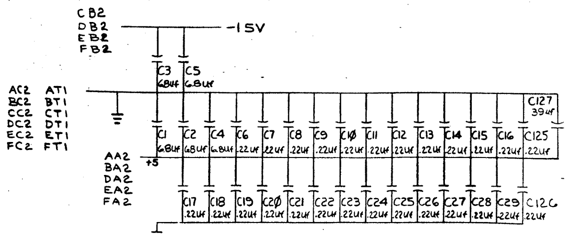

QTY.	REF DESIGNATION	DESCRIPTION	PART NO.	ITEM NO.
1	R176	RES 4.7K 1/4W 5%	1300447	60
2	J7, J8	JUMPER MACH. INSERTED	9009185	59
1	C52	CAP 470 PF 100V 5%	1000024	58
1	C56	CAP 680 PF 100V 5%	1000026	57
1	C127	CAP 39UF 10V	1000076	56
4		SCREW, NYLON #6-32	9008212	55
4	W1-W4	STANDOFF, THREADED, INSULATED 1/4 X 3/8 LG	9008213	54
83	R11-26, R37-52, R61-76, R123-138, R158-173 R77, R81, R27	RES 100 1/4 W 5%	1300229	53
				52
				51
4		INSULATING WASHER .265 x .600 x .002 THK	9008493	50
12		EYELET #GS4-7 E.B. STIMPSON	9006732	49
1		HANDLE	1210711	48
12		SPLIT LUGS	9006735	47
4		HEAT SINK	1210001	46
7	E11-E14, E18, E19, E20	IC 74H74	1909667	45
1	E6	IC 1074H04	19-10463 *	44
10	E3, E8, E23, E28, E31, E34, E37, E40, E43, E46	IC 8251-1	1909854	43
3	E2, E4, E27	IC 1074H00	19-10462 *	42
2	E22, E25	IC 74H10	1909057	41
20	T1-T20	TRANSFORMER	1609996	40
4	E9, E15, E16, E17	IC DEC 7380	1910390	39
20	E1, E5, E7, E10, E21, E24, E26, E29, E30, E32, E33, E35, E36, E38, E39, E41, E42, E44, E45, E47	IC 4011 QUAD TRANSISTOR	1511102 *	38
4	Q9, Q10, Q12, Q13	TRANSISTOR 2N3762	1509649	37
3	Q6, Q8, Q11	TRANSISTOR 2N4258	1505321	36
1	Q1	TRANSISTOR 6534 D	1503409	35
1	Q5	TRANSISTOR 3009 B	1503100	34
3	Q2, Q3, Q7,	TRANSISTOR 1008	1502155	33
1	Q4	TRANSISTOR 2219	1501881	32
4	R85, R86, R103, R104	RES 16.9 6W 1%	1310032	31
1	R92	RES 1.78K 1/8W 1%	1302612	30
1	R91	RES 909 1/8W 1%	1302685	29
2	R90, R94	RES 147 1/8W 1%	1302874	28
2	R89, R105	RES 2K ¼W 5%	1302387	27
4	R9, R10, R106, R141	RES 680 ¼W 5%	1301424	26
1	R83	RES 750 ¼W 5%	1301401	25
3	R36, R139, R140	RES 51 ¼W 5%	1309422	24
1	R97	RES 15K ¼W 5%	1300496	23
1	R174	RES 10K ¼W 5%	1300479	22
1	R95	RES 2.2K ¼W 5%	1300417	21
4	R87, R88, R101, R102,	RES 1.5K ¼W 5%	1300394	20
1	R79,	RES 470 ¼W 10%	1300317	19
3	R84, R99, R100	RES 1.5K ¼W 5%	1300391	18
1	R93	RES 470 ½W 5%	1300315	17
A/R		WIRE, JUMPER, AWG #22, STRANDED (BLACK)	9107350	16
3	R78, R80, R98	RES 330 ¼W 5%	1300295	15
41	R1-R8, R28-R35, R53-R60, R96, R107-R114, R142-R149	RES 150 ¼W 5%	1300250	14
				13
1	D58	DIODE 1N823 ZENOR	1105508	12
25	D17, D18, D55, D60, D61, D64-D67, D101-D116	DIODE D672	1105275	11
88	D1-D16, D19-D54, D56, D57, D62, D63, D68-D99	DIODE D664	1100114	10
6	C1-C5, C49	CAP 6.8 MFD 35V 20%	1000067	9
36	C6-C29, C46, C47, C48, C50, C53, C54, C74, C107, C108, C125, C126 C59	CAP .22uf 50V -20% 80%	1010274	8
80	C30-C45, C57, C58, C60-C73, C75-C106, C109-C124	CAP 1000 PF 100V 5% DM	1000042	7
A/R		WIRE JUMPER AWG #22 SOLID	9107560-01	6
2	C51, C55	CAP 39PF 100V 5% DM	1000010	5
1		ETCHED CIRCUIT BOARD	5009708	4
REF		MODULE CO HISTORY	B-MH-G321-06	3
REF		ASSY DRILLING HOLE LAYOUT	E-AH-G231-05	2
REF		X-Y COORDINATE HOLE LOCATION	K-CO-G231-04	1

PARTS LIST

		16		J6-A	J6-B

IC TYPE	GND	+5V

GND AND 5V ARE USUALLY PIN 7 AND 14 RESPECTIVELY EXCEPTIONS ARE STATED ABOVE

IC PIN LOCATIONS

ITEM NO	AWG	FROM PT	TO PT
16		J6-A	J6-B
16		J5-A	J5-B
6		J4-A	J4-B
6		J3-A	J3-B
6		J2-A	J2-B
6		J1-A	J1-B

JUMPER LIST

REV.	CHANGE NO.		
B	ORIGINATED		
C	G231-00001	H.J. Hale 5-18-72	P.DURANT
D	G231-00002	5/31/72	P DURANT
E	G231-00003	6-14-72	P.DURANT
F	G231-00044A	H. Densmore 8/24/72	P.DURANT
H	G231-00010	2/28/73	P.DURANT
J	G231-000012	A.F. Hale 4-3-73	P.DURANT
K	G231-00013	4/6/73	R. MARTEL 11-2-73
L	G231-00014	1/7/74	P.DURANT 1-21-74

REVISIONS

DEC NO.	EIA NO.	DEC NO.	EIA NO.
2N4258	SAME		
G534D	NONE		
3009-B	2N3646		
2219	2N2219		
1N823	NONE		
D672	1N3653	1008	NONE
D664	1N3606	2N3762	SAME

SEMICONDUCTOR CONVERSION CHART

FIRST USED ON OPTION/MODEL MM11-L

ETCH BOARD REV E

DRN. DATE 11/16/71
CHK'D. DATE 1-21-72
ENG. P Durant DATE 1-21-72
PROJ. ENG. DATE
PROD. DATE 1-21-72

NEXT HIGHER ASSY B-DD-MM11-L

SCALE 2/1
SHEET 1 OF 4

EQUIPMENT CORPORATION.
MAYNARD, MASSACHUSETTS

TITLE
PDP-11
MEMORY
DRIVER

SIZE E CODE CS NUMBER G231-0-1 REV. L

DIST.

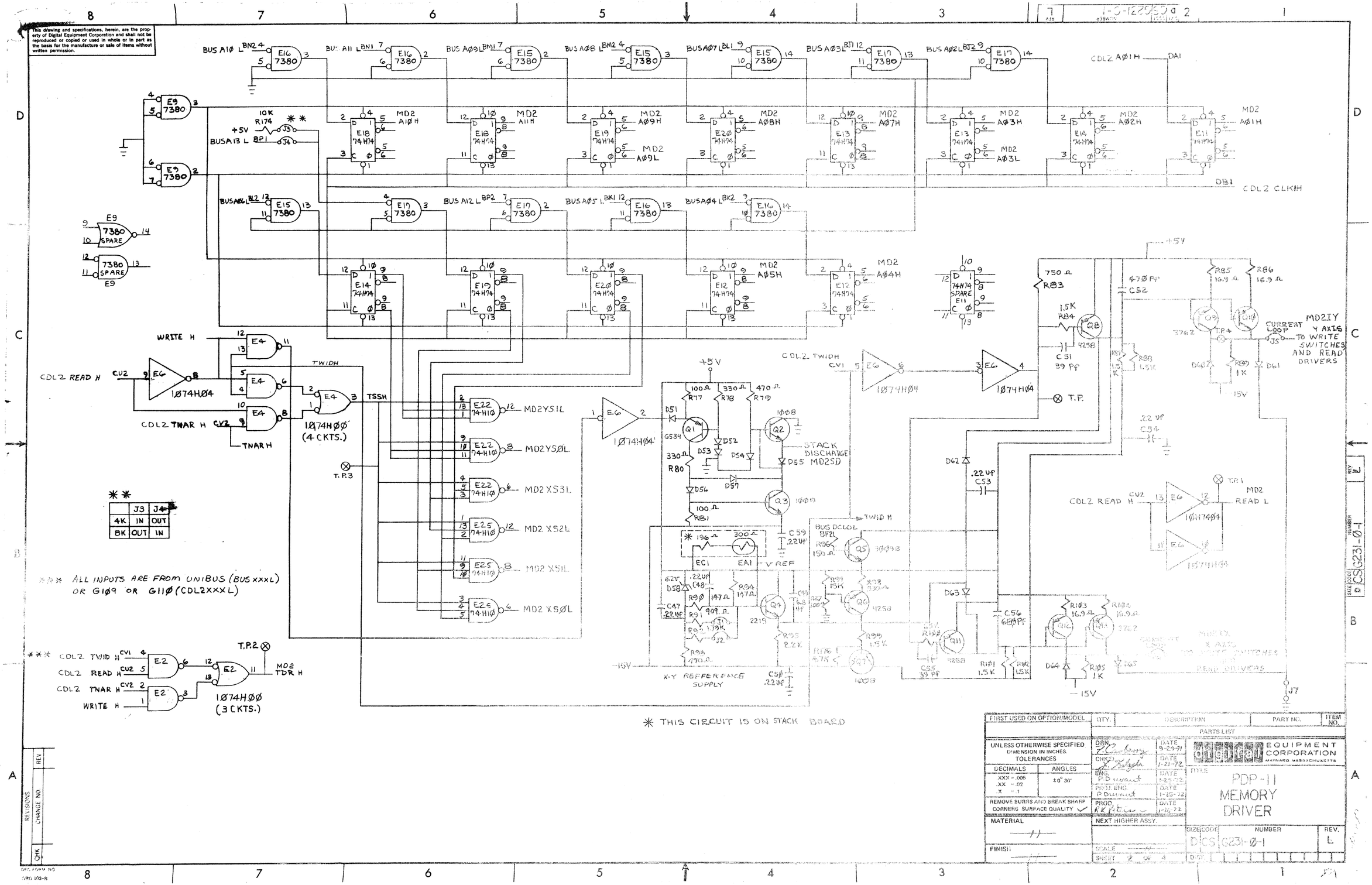

	J3	J4
4K	IN	OUT
BK	OUT	IN

FIRST USED ON OPTION/MODEL	QTY.	DESCRIPTION	PART NO.	ITEM NO.
		PARTS LIST		

UNLESS OTHERWISE SPECIFIED DIMENSION IN INCHES. TOLERANCES

DECIMALS	ANGLES
.XXX = .005	±0° 30'
.XX = .02	
.X = .1	

REMOVE BURRS AND BREAK SHARP CORNERS SURFACE QUALITY ✓

MATERIAL —//—

FINISH —//—

DRN. Z Carberry	DATE 9-29-71	DIGITAL EQUIPMENT CORPORATION MAYNARD MASSACHUSETTS
CHK'D Z Kokosh	DATE 1-21-72	
ENG. F D Durant	DATE 1-25-72	TITLE PDP-11 MEMORY DRIVER
PROD. ENG. P Durant	DATE 1-25-72	
PROD. K K Peters	DATE 1-26-72	

NEXT HIGHER ASSY.

SIZE CODE D CS NUMBER G231-0-1 REV. L

SCALE —//— SHEET 2 OF 4

REVISIONS: REV | CHANGE NO. | CHK

SEE FORM NO. DRD 102-B

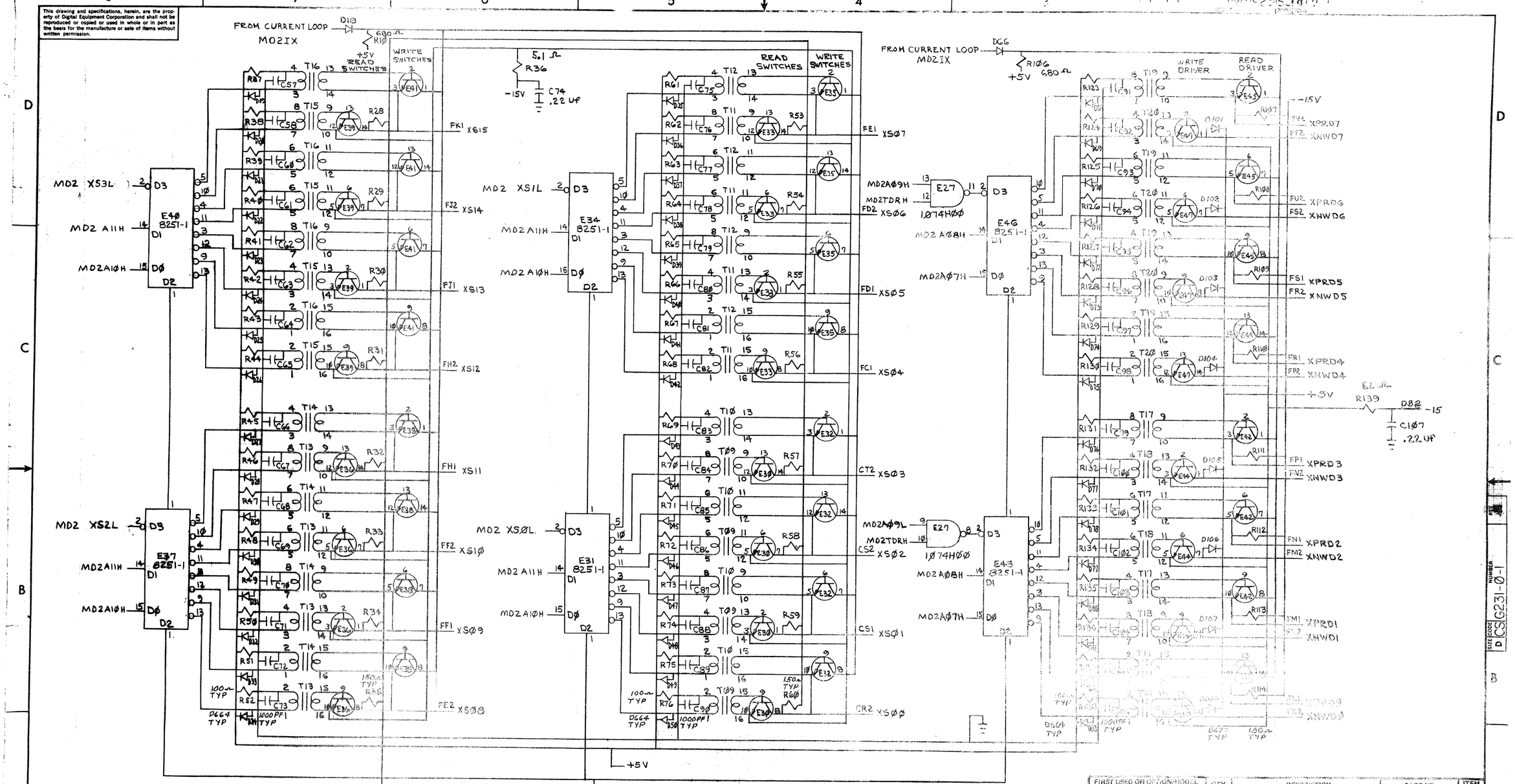

FIRST USED ON OPTION/MODEL	QTY.	DESCRIPTION	PART NO.	ITEM NO.
		PARTS LIST		

UNLESS OTHERWISE SPECIFIED DIMENSION IN INCHES. TOLERANCES

DECIMALS	ANGLES
.XXX = .005	±0° 30'
.XX = .02	
.X = .1	

REMOVE BURRS AND BREAK SHARP CORNERS. SURFACE QUALITY ✓

MATERIAL —

FINISH —

DRN		DATE 10-1-71
CHKD		DATE 1-31-72
ENG		DATE 1-25-72
PROJ. ENG.		DATE 1-25-72
PROD.		DATE 1-26-72
NEXT HIGHER ASSY.		
SCALE —		
SHEET 3 OF 4		

EQUIPMENT CORPORATION
MAYNARD, MASSACHUSETTS

TITLE
PDP-11 MEMORY DRIVER

SIZE	CODE	NUMBER	REV.
D	CS	G231-0-1	

DIST

REVISIONS		
CHK	CHANGE NO.	REV.

DEC FORM NO
DRD 102-B

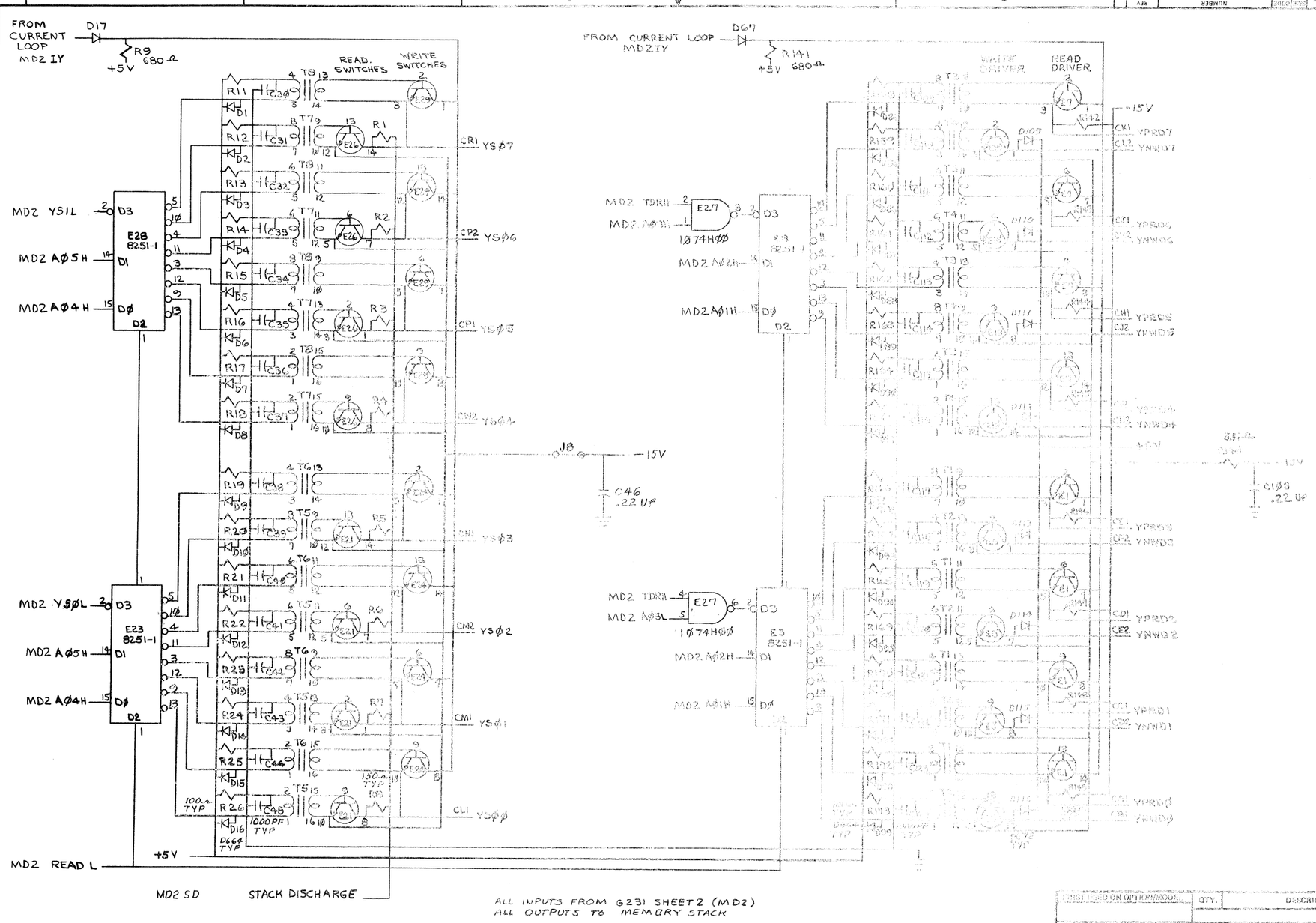

FINISH USED ON OPTION/MODEL	QTY.	DESCRIPTION	PART NO.	ITEM NO.
		PARTS LIST		

UNLESS OTHERWISE SPECIFIED DIMENSION IN INCHES. TOLERANCES
DECIMALS .XXX = .005, .XX = .02, .X = .1; ANGLES ±0° 30'
REMOVE BURRS AND BREAK SHARP CORNERS. SURFACE QUALITY ✓
MATERIAL —//—
FINISH —//—

DRN. F. Carberry DATE 10/4/71
CHKD. DATE 1-21-72
ENGR. F. Dwyant DATE 1-25-72
PROD. ENG. F. Dwyant DATE 1-25-72
PROD. DATE 1-26-72
NEXT HIGHER ASSY. —//—

digital EQUIPMENT CORPORATION MAYNARD, MASSACHUSETTS

TITLE PDP-11 MEMORY DRIVER

SIZE D CODE CS NUMBER G231-Ø-1 REV. B

REVISIONS: REV. | CHANGE NO. | DATE

DEC FORM NO DAD 102-B

NOTES:
5. ON SOME SYSTEMS SHIPPED, DL3 CAN ALSO BE 100NS DELAY LINE PART # 1609559.

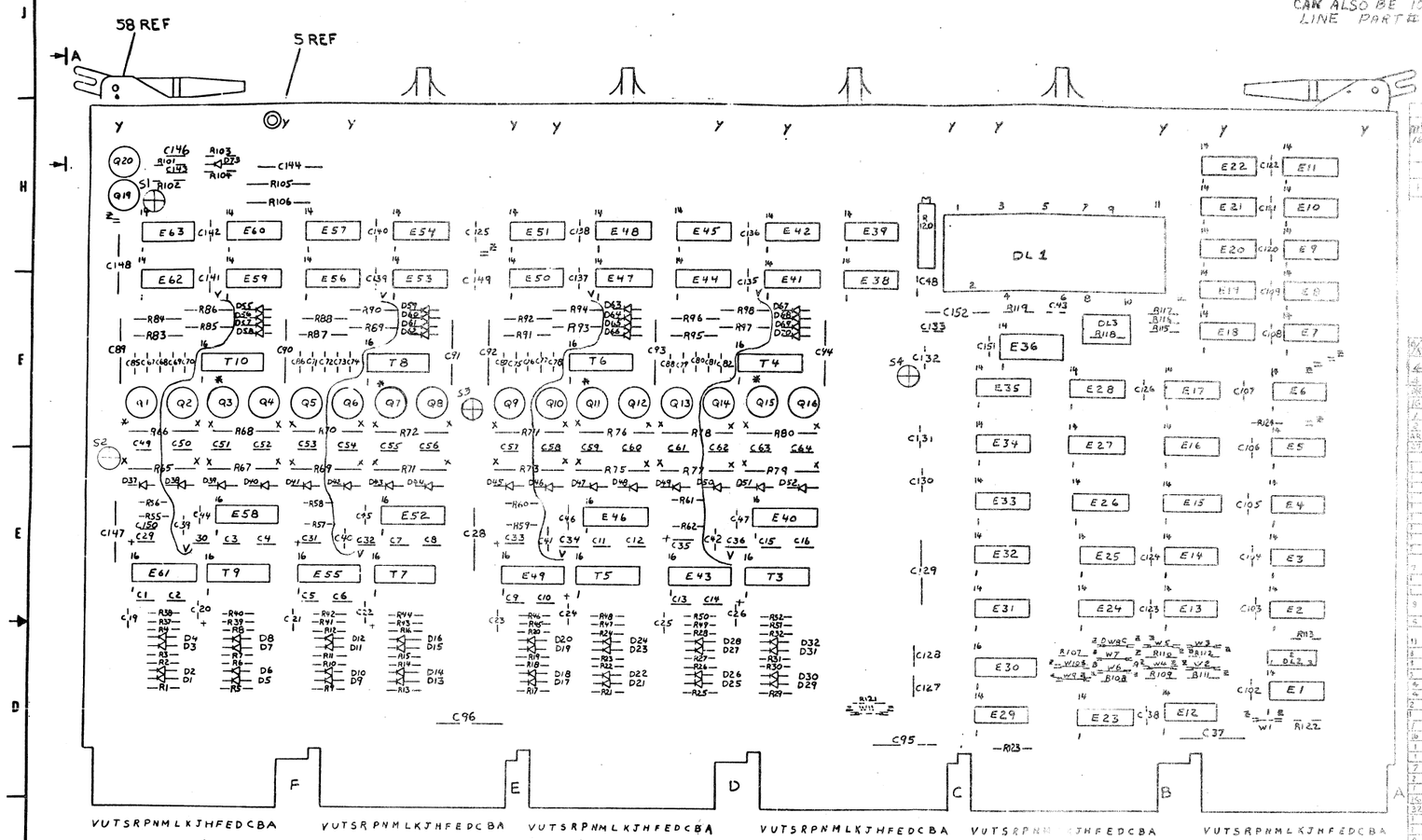

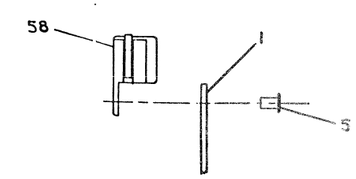

VIEW A-A

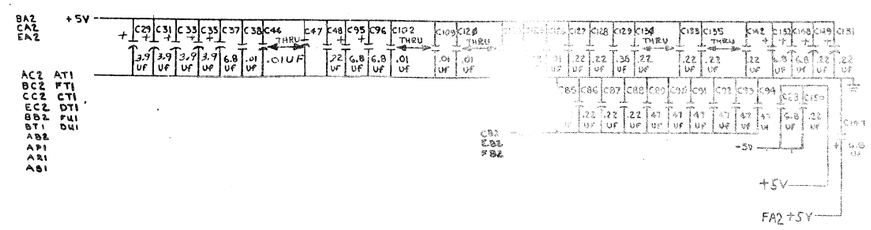

CAUTION
NON-STANDARD DRAWING FOR SPECIAL APPLICATION

IC TYPE	GND	+5V
7475	12	5
5326	9	16
1580	1	8

GND AND 5V ARE USUALLY PIN 7 AND 14 RESPECTFULLY. EXCEPTIONS ARE STATED ABOVE

IC PIN LOCATIONS

ITEM NO	AWG	FROM PT	TO PT

JUMPER LIST

	W3	W10
4K	IN	OUT
8K	OUT	IN

MEMORY BANK SIZE

W'S 2,3,4,5,6 PROGRAM MEMORY BANK LOCATION. CUT JUMPER FOR BUS A LINE LOW (ASSERTED) WHEN BANK SELECTED. W5 MUST BE IN WHEN USED AS 8K BANK

BUS A13 L — BP1
BUS A16 L — BS2
BUS A15 L — BR1
BUS A17 L — BS1
BUS A11 L — BH1
BUS A14 L — BR2

E12 7380 · E13 8242 · E23 7380 · E24 8242

R107 4.7K +5V · W10 · W7 · W5 · W3 · W4 · W2 · W6 · W8 · W1 · R110 4.7K · R112 4.7K · R109 4.7K · R111 4.7K · R108 4.7K · D1A 4014

* USE INSULATED JUMPERS IN POSITIONS SHOWN BY DOTTED LINES WHEN INTERLEAVING

HIGH WHEN MEMORY BANK IS SELECTED

+5V R122 1K

BUS MSYN L — BV1 — E23 7380
MSYN A L — CU1 — E15 74H04 — R123 390 +5V

DEVICE SELECT CIRCUIT (DSELH)

BUS DCLOL — BF2 — E23 7380

C194 6.8UF · D13 · R101 270Ω · C196 .22UF · R102 560Ω · C193 .22UF · Q20 3009 · Q19 3762 · R104 390Ω · R103 330Ω · R105 100Ω · R106 100Ω 1W · -5V TO SENSE AMPS · SPLIT LUG T.P4 · -15V · -5V SUPPLY

TP2 TP3

SPARES

E34 7437 +3V

E24 8242

E24 8242

E3 74H74

BUS A00 L — BH2 — E29 7380 — E35 74H04

BUS C00 L — BU2 — E29 7380

BUS C01 L — BT2 — E29 7380

E6 7408

E31 7400 · E31 7400

LOAD 0 H

TO DATA MASKS

LOAD 1 H

CLK IH

BYTE MASKING LOGIC

+5V R121 1K — E29 7380 — W11 — PROTECT LOW

E34 7437 — E14 7437 — E15 74H04 — E13 74H04 — E2 7474 — DL2 30NS — DL3 72NS — SEE NOTES SHEET 1

E26 7402 — E15 74H04

E25 7380 — E16 7437 — E25 7400 — E11 7400

E31 7400 — E31 7400

BUS MSYN L — DATA OUT H — TO BUS DRIVERS

CAUTION
NON-STANDARD DRAWING
FOR SPECIAL APPLICATION

REVISIONS — REV — CHANGE NO. — CHK.

FIRST USED ON OPTION — NEXT NO. — DTN NO.

MMH-L

UNLESS OTHERWISE SPECIFIED DIMENSIONS ARE IN INCHES TOLERANCES DECIMALS .XXX ± .005 .XX ± .01 .X ± .1 ANGULAR ± 30' MATERIAL FINISH

DIGITAL EQUIPMENT CORPORATION

CONTROL & DATA LOOPS (CDL2)

SIZE — CODE — DWG NO. — REV

SCALE — SHEET

SEC FORM 180

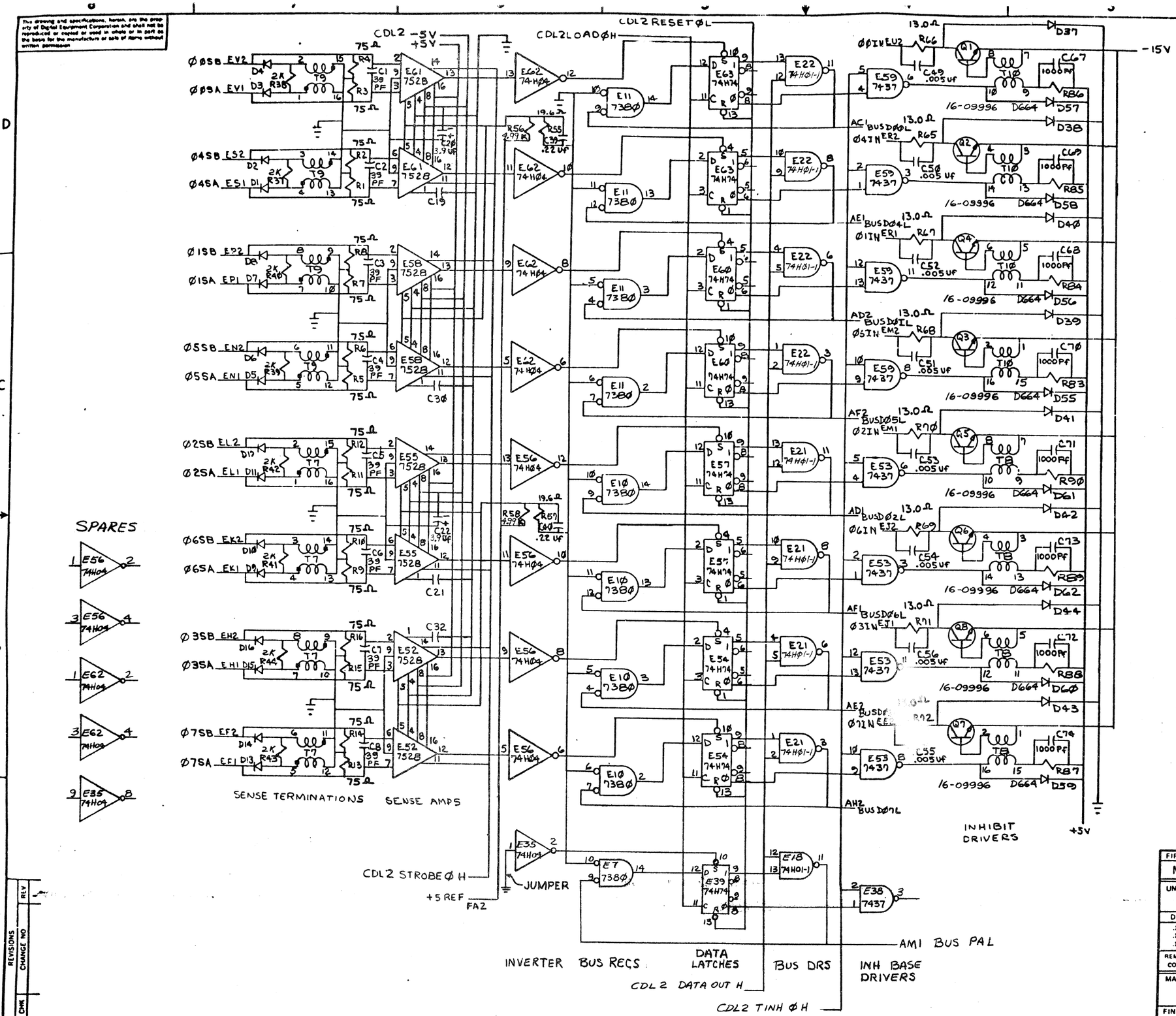

NOTES:

1. ALL SIGNALS FROM UNIBUS (BUS DØØL TO BUS D07L), G110 SHEET 2 (CDL2) OR STACK (ØØ5A,B TO Ø75A,B AND ØØIN TO Ø7IN)

2. UNLESS SPECIFIED:
   ALL RESISTORS ARE 82Ω ½W 5%
   ALL CAPACITORS ARE 120 PF 100V 5%
   ALL TRANSFORMERS ARE 16-09478-01
   ALL DIODES ARE D672
   ALL TRANSISTORS ARE DEC-3734

3. ECO#2 DID THE FOLLOWING:
   C1-C8 CHANGED FROM 68 PF TO 39 PF
   R37-R44 CHANGED FROM 330Ω TO 2K
   C49-C56 CHANGED FROM .0022μf TO .005μf

4. ECO#8 DID THE FOLLOWING:
   R56, R58 CHANGED FROM 5.62K TO 4.99K
   C20, C22 CHANGED FROM .22μf TO 3.9μf

5. ECO#13 ADD JUMPER E35P1 TO GND.

CAUTION
NON-STANDARD DRAWING FOR SPECIAL APPLICATION

FIRST USED ON OPTION/MODEL	QTY.	DESCRIPTION	PART NO.	ITEM NO.
MMII-L		PARTS LIST		

UNLESS OTHERWISE SPECIFIED DIMENSION IN INCHES TOLERANCES
DECIMALS .XXX = .005 .XX = .02 .X = .1
ANGLES ±0° 30'
REMOVE BURRS AND BREAK SHARP CORNERS SURFACE QUALITY ✓
MATERIAL —//—
FINISH —//—

DRN Z Cadeny DATE 1/18/72
CHK'D J Ralph DATE 1-25-72
ENG. P Dumont DATE 1/-/72
PROJ ENG. P Dumont DATE -/-/72
PROD. K V Peterson DATE 1/31/72

DIGITAL EQUIPMENT CORPORATION MAYNARD MASSACHUSETTS

TITLE CONTROL & DATA LOOPS (CDL3)

NEXT HIGHER ASSY. B-DD-MMII-L
SCALE —//—
SHEET 3 OF 5

SIZE	CODE	NUMBER	REV
D	CS	G110-0-1	E10

DIST

REVISIONS		
CHANGE NO		REV
DWN		

DEC FORM NO DRD 103-B

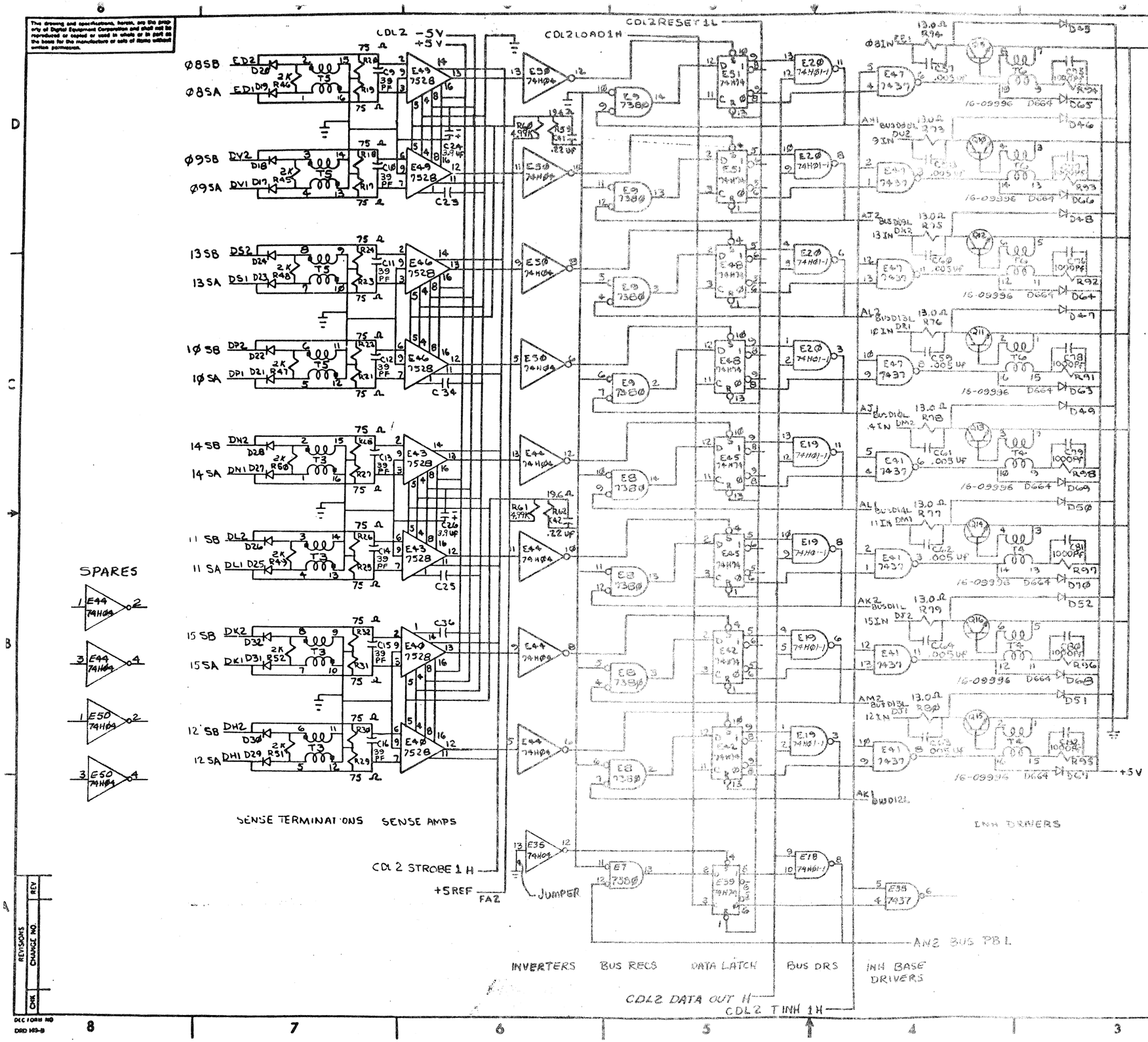

NOTES :

1. ALL SIGNALS FROM UNIBUS (BUS DOBL-DISL) G110 SHEET 2 (CDL2) OR STACK (Ø8SA,B TO 15SA,B AND Ø8IN TO 15IN)
2. UNLESS SPECIFIED :
   ALL RESISTORS ARE 82 Ω ½ W 5%
   ALL DIODES ARE D672
   ALL CAPACITORS ARE 120 PF 100 V 5%
   ALL TRANSFORMERS ARE 16-09478-01
   ALL TRANSISTORS ARE DEC-3734
3. ECO #2 DID THE FOLLOWING :
   C9-C16 CHANGED FROM 60 PF TO 39 PF.
   R45-R52 CHANGED FROM 330 Ω TO 2K
   C57-C64 CHANGED FROM .0022 μf TO .005 μf
4. ECO #8 DID THE FOLLOWING :
   R60, R61 CHANGED FROM 5.62K TO 4.99 K
   C24, C26 CHANGED FROM .22 μf TO 3.9 μf
5. ECO #13 ADD JUMER E35P13 TO GND.

CAUTION
NON-STANDARD DRAWING
FOR SPECIAL APPLICATION

FIRST USED ON OPTION/MODEL	QTY.	DESCRIPTION	PART NO.	ITEM NO.
MM11-L		PARTS LIST		

UNLESS OTHERWISE SPECIFIED DIMENSION IN INCHES TOLERANCES
DECIMALS: XXX ± .05, XX ± .02, X ± .1
ANGLES: ± 0° 30'
REMOVE BURRS AND BREAK SHARP CORNERS SURFACE QUALITY ✓
MATERIAL —//—
FINISH —//—

DRN. DATE
CHK'D. DATE
ENG. DATE
PROJ. ENG. DATE
PROD. DATE

DIGITAL EQUIPMENT CORPORATION MAYNARD, MASSACHUSETTS

TITLE CONTROL & DATA LOOPS (CDL 4)

NEXT HIGHER ASSY. B-DD-MM11-L
SCALE —//—
SHEET 4 OF 5

SIZE D CODE CS NUMBER G110-0-1 REV. E10
DIST

REVISIONS: REV. CHANGE NO. CHK.

DEC FORM NO. DRD 103-B

E.C.O. MODULE REFERENCE

ECO. NUMBER	SUMMARY OF E.C.O	PRINT CHANGE LOCATION	MODULE STAMPED REVISION	CIRCUIT SCHEM REVISION	1	2	3	3A	4	5	6	7	8	9	9A	10	10A	11	12	13 13A	14 14A	15	15A	16	17	18	19
1	CHANGE R116, R118 FROM 1K TO 220Ω. CUT ETCH FROM E2-P3 TO E5-P4 & TO E15-P4. ADD JUMPERS FROM E2-P3 TO GND, FROM E5-P4 TO E15-P4, CUT ETCH FROM E2-P4 TO E2-P2, ADD JUMPER FROM E2-P4 TO DL2-P3, CUT ETCH FROM E26-P8 TO DL1-P10 ADD JUMPER FROM E26-P8 TO DL1-P9.		A	A	□																						
2	CHANGE SENSE TERM. CAPS FROM 68 PF. TO 39 PF. C1-C6 (16 PARTS), CHANGE BALUN RES'S., R37-R52, FROM 330Ω TO 2K (16 PARTS), CHANGE INH. BY PASS CAPS., C49-C64, FROM .0022 UF TO .005 UF. (16 PARTS) CHANGE DL3 FROM 50NS TO 100NS DELAY LINE CHANGE TERM. RES R115 FOR DL3 FROM 390Ω TO 3K	SHT 3&4 AREA 2-C SHT 2 AREA 4-C SHT 2 AREA 4C	B	B	□	□																					
3	DID NOT AFFECT 'C' REV ETCH MODULES		—	—	*	*	*																				
3A	DID NOT AFFECT "C" REV ETCH MODULES		—	—	*	*	*	*																			
4	DL3 NOT TERMINATED PROPERLY, CHANGE R115 FROM 3K TO 1K, CUT ETCH FROM DL3 OUT TO E16-P8, CUT ETCH FROM DL3 IN TO E2-P1, ADD JUMPER FROM DL3 OUT TO E2-P1 GLUE DOWN DL2 WITH ECCO BOND	SHEET 2 AREA 4-C SHT 1 AREA 3-D	D	D	□	□	*	*	□																		
5	REVERSE C152, SO THAT + SIDE OF CAPACITOR GOES TO +5V INSTALL 4-1/4" OD X 3/8 16 STAND-OFFS	SHT 1 AREA 4-E " " 2-F	E	E	□	□	*	*	□	□																	
6	DID NOT AFFECT C REV ETCH MODULES				*	*	*	*	*	*	*																
7	DRILL BLANK BOARD, AND INSTALL (4) STANDOFFS & SCREWS	SHT 1 AREA 2-F	E1	E1	□	□	*	*	□	□	*	□															
8	CHANGE R56, 58, 60, 61 FROM 5.62K TO 4.99K CHANGE C20, 22, 24, 26, 29, 31, 33, 35 FROM .22 UF TO 3.9 UF CHANGE C44-47 FROM .22 UF TO .01 UF	SHT 3&4 AREA 2-C SHT 1 AREA 5-C SHTS 3+4 AREA 2-C SHT 1 AREA 5-C	E2	E2	□	□	*	*	□	○	*	○	□														
9	INSTALL GND JUMPERS ON SIDE 1, CHANGE PART NO. OF #18 WIRE FROM 9107360-00 TO 1700029	SHEET 1	H	E3	□	□	*	*	□	○	*	○	□	□													
9A	RESTAMP HANDLE E-3, CHANGE PRINT FROM H TO E-3		E3	E3	□	□	*	*	□	○	*	○	□	□	□												
10	REMOVE E28, CUT ETCH FROM E28-P13 TO E28-P2 ADD E28 AND JUMPER E28-P13 TO E15-P10		J	E4	□	□	*	*	□	○	*	○	□	*	*	□											
10A	RESTAMP HANDLE E-4, CHANGE PRINT REV FROM J TO E4		E4	E4	□	□	*	*	□	○	*	○	□	*	*	□	□										
11	CANCELED	———	—	—	—	—	—	—	—	—	—	—	—	—	—	—	—	—	—								
12	PRINT CHANGE ONLY		E5	E5	□	□	*	*	□	○	*	○	□	*	*	□	*	—	□								
13 13A	ADD 2 JUMPERS SO THAT PAL AND PBL ARE HIGH ON THE BUS CHANGE EFFECTIVITY DATE		E6	E6	□	□	*	*	□	○	*	○	□	*	*	□	*	—	*	□							
14 14A	DID NOT EFFECT C REV ETCH MODULE				*	*	*	*	*	*	*	*	*	*	*	*	*	—	*	*	*						
15	GENERATE AN ALLOWABLE SUBSTITUTION LIST. CHANGE DL3.	SHEET 1 AREA 1-E	E7	E7	□	□	*	*	□	○	*	○	□	*	*	□	*	—	*	□	*	□					
15A	DELETE 68Ω RES FROM ALLOWABLE SUBSTITUTION LIST.	SHEET 1 AREA 1+2-H	E7	E7	□	□	*	*	□	○	*	○	□	*	*	□	*	—	*	□	*	□	□				
16	3 ETCH CUTS, 2 JUMPERS TO E7 PINS 6 & 7	SHT AREA 2-C	E8	E8	□	□	*	*	□	○	*	○	□	*	*	□	□	—	□	□	*	*	*	□			
17	DID NOT AFFECT C REV ETCH MODULES.				*	*	*	*	*	*	*	*	*	*	*	*	*	—	*	*	*	*	*	*	*		
18	1 ETCH CUT, REMOVE 1 JUMPER INSTALL #30 TWP FOR STROBE ΦH		E9	E9	□	□	*	*	□	○	*	○	□	*	*	□	□	—	□	□	*	*	*	□	*	□	
19	MOVE E26-8 FROM TAP 9 TO TAP 10 OF DELAY LINE 1.	SHEET 2 AREA D4	E10	E10	□	□	*	*	□	○	*	○	□	*	*	□	□	—	□	□	*	*	*	□	*	□	□

NOTES:

1. THIS PRINT IS FOR "C" REV. ETCH MODULES ONLY.
2. THIS CHART IS DESIGNED TO ALLOW THIS G110 CIRCUIT SCHEMATIC TO BE USED WITH ALL PREVIOUS REVISION MODULES
3. CHART IS USED AS FOLLOWS:
   - A. LOCATE REVISION LETTER STAMPED ON HANDLE
   - B. FOLLOW THE MODULE STAMPED COLUMN TO FIND APPROPRIATE REVISION
   - C. NOTICE SYMBOLS TO RIGHT OF REVISION LETTER, THESE SYMBOLS WILL INDICATE ECO REQUIREMENTS FOR THAT MODULE.
4. SYMBOLS:
   - □ = REQUIRED BUT REFER TO EFFECTIVITY DATE
   - △ = ONE OR THE OTHER IS REQUIRED
   - ○ = ONE OR THE OTHER IS REQUIRED BUT (C152 MUST BE CHANGED)
   - * = NOT REQUIRED

— CAUTION —
NON-STANDARD DRAWING
FOR SPECIAL APPLICATION

FIRST USED ON OPTION/MODEL	QTY.	DESCRIPTION	PART NO.	ITEM NO.
MMI1-L		PARTS LIST		

UNLESS OTHERWISE SPECIFIED DIMENSION IN INCHES
TOLERANCES
DECIMALS: .xxx = .005, .xx = .02, .x = .1
ANGLES: ±0° 30'
REMOVE BURRS AND BREAK SHARP CORNERS SURFACE QUALITY √
MATERIAL —/—
FINISH —/—

DRN. L.G. DATE 12-22-72
CHK'D. DATE
ENG. DATE
PROJ. ENG. DATE
PROD. DATE
NEXT HIGHER ASSY. B-DD-MMI1-L
SCALE NONE
SHEET 5 OF 5

digital EQUIPMENT CORPORATION MAYNARD MASSACHUSETTS

TITLE CONTROL & DATA LOOPS (CDL5)

SIZE D | CODE CS | NUMBER G110-0-0 | REV. E10

DIST.

REVISIONS: REV | CHANGE NO | CHK

DEC FORM NO 1073-C

NOTES:

1. ALL COMPONENT LEADS TO BE LESS THAN 1/16 INCHES LONG ON SIDE TWO OF MODULE

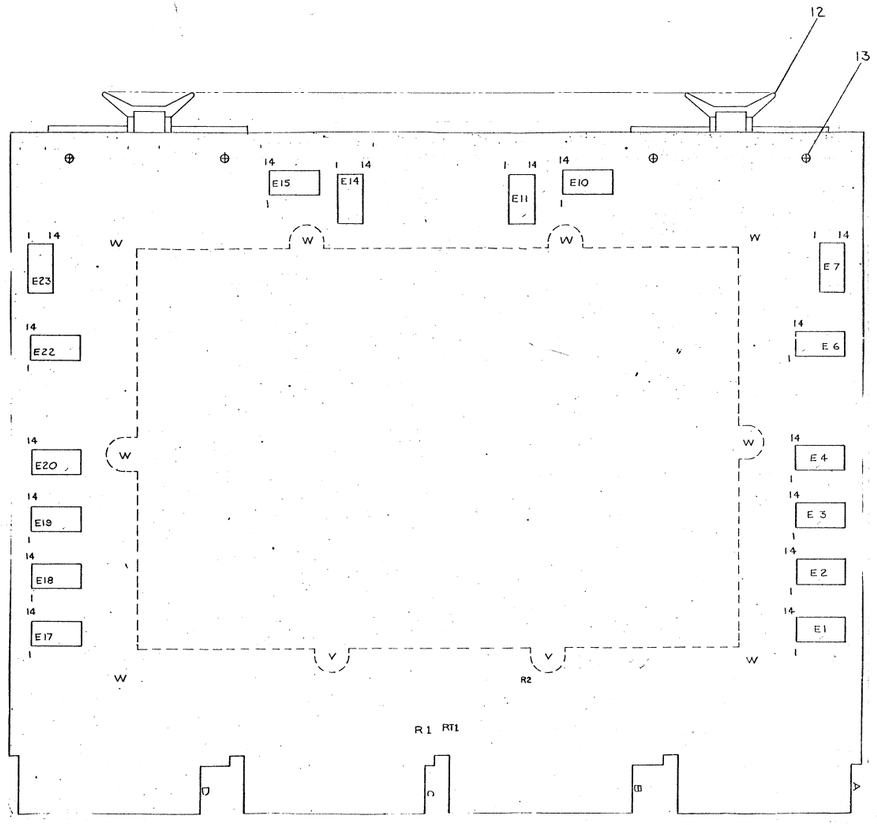

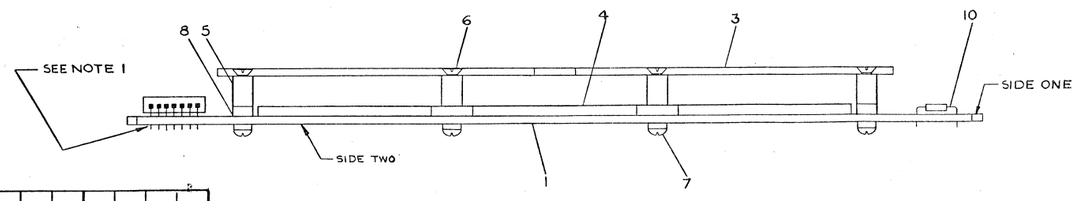

* COMPONENT SUBSTITUTION LIST

MODULE	ORIGINAL PART DESCRIPTION	ORIGINAL PART PART NO	SUBSTITUTE PART DESCRIPTION	SUBSTITUTE PART PART NO	ITEM NO
H213	2501-00 I.C. DIODE	1910010-00	2501-01 I.C. DIODE	1910010-01	2
H213	2501-00 I.C. DIODE	1910010-00	2501-03 I.C. DIODE	1910010-03	2
H213	2501-00 I.C. DIODE	1910010-00	2501-02 I.C. DIODE	1910010-02	2

LEGEND

MODULE CONN.	BACK PANEL LOCATION
A	C
B	D
C	E
D	F

PARTS LIST

QTY.	REF DESIGNATION	DESCRIPTION	PART NO.	ITEM NO.
1	RT1	THERMISTOR 300 2%	1309785	16
1	R2	RESISTOR 5.1 1/4W 5%	1303422	15
1	R1	RESISTOR 196 1/8W 1%	1302956	14
8		EYELET	3006132	13
4		HANDLE, GREEN	3008337-0-1	12
1		STICKER/DEC PART & P.O. NO.	VENDOR SUPP	11
2		JUMPER		10
16		4036-CORE MATS (STRUNG)		9
4		WASHER, NYLON 3/32 X 1/4 (4-40 HOLE)		8
10		SCREW, NYLON FILLISTER, HD. 4-40 X .19 LG.		7
10		SCREW, F.H. NYLON #4-40 X .19 LG.		6
10		STANDOFF, THREADED #4-40 1/4 DIA. 5/32		5
1		SUBSTRATE		4
1		COVER PLATE	VENDOR SUPP	3
16	E11, E13, E17-E20, E22, E23 E1-E4, E6, E7, E10, E11	I.C. DIODE 2501	1910010 *	2
1		PLANER MEMORY BOARD	5009713	1

H213-0 DIAGRAM

IC TYPE	GND	+5V
GND AND 5V ARE USUALLY PIN 7 AND 14 RESPECTIVELY. EXCEPTIONS ARE STATED ABOVE		

IC PIN LOCATIONS

ITEM NO	AWG	FROM PT	TO PT

JUMPER LIST

DEC NO.	EIA NO.	DEC NO.	EIA NO.

SEMICONDUCTOR CONVERSION CHART

REV.	REVISION	DRAWING NO.
A	ORIGINATED	H213-00001
B		H213-00002
C		H213-00003
D		H213-00004
E		H213-00005
F		

FINISH DESIGNATION SPEC. MOD. MM11-L

ETCH BOARD REV

DRAWN — DATE
CHKD — DATE
APPR — DATE
PROJ. ENG. — DATE
PROD. — DATE
SYSTEMS ENG.
S-DC-MM11-L-0
SCALE
SHEET 1 OF 2

DIGITAL EQUIPMENT CORPORATION

TITLE: STACK SCHEMATIC (4K 16BIT)

SIZE CODE E | CS | H213-0-1 | REVISION F

DIST.

ITEM NO. 1 — 1 PLANER MEMORY BOARD 5009713

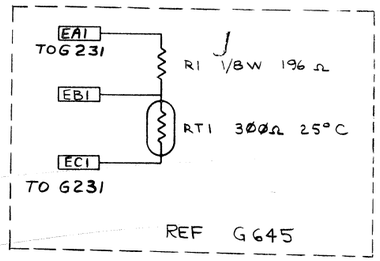

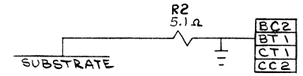

NOTES
1. UNLESS OTHERWISE SPECIFIED: IC'S ARE TO BE DEC PART # 1910010
2. INDICATES STACK LINE NUMBER. (TYP)
3. INDICATES CURRENT LOOP.
4. INDICATES MAGNET WIRE TERMINATION (SOLDERED TO P.C. PAD).

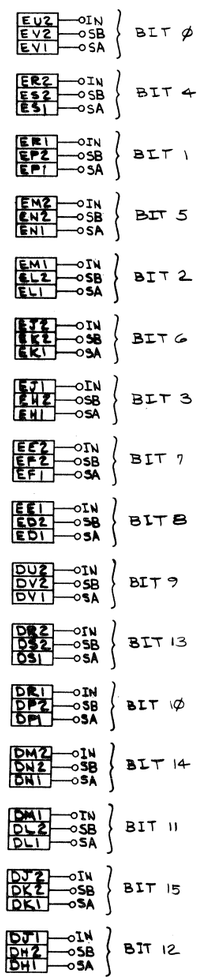

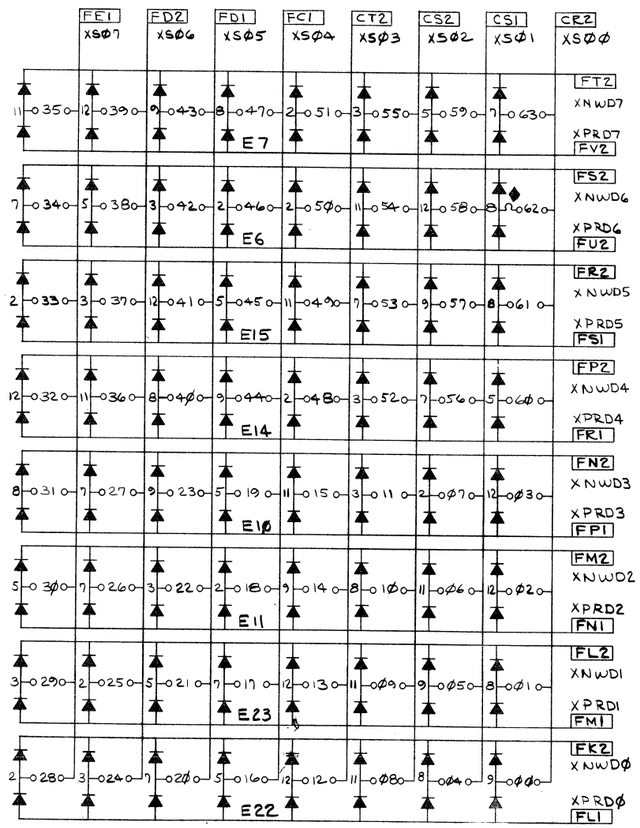

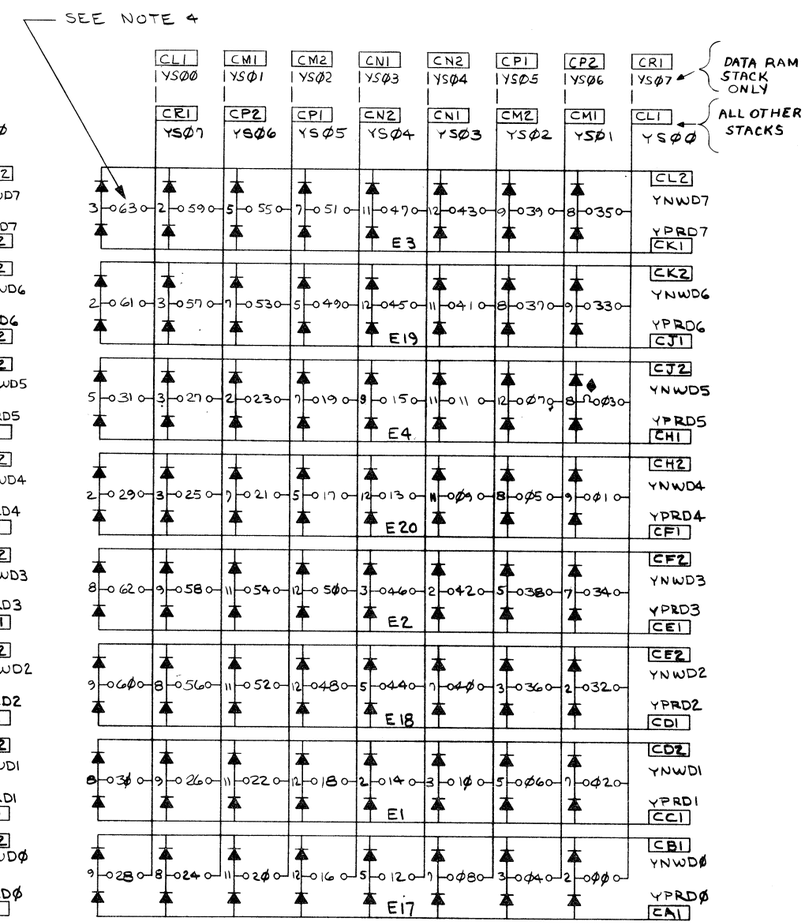

FIRST USED ON OPTION/MODEL	QTY.	DESCRIPTION	PART NO.	ITEM NO.
MM11-L		PARTS LIST		

UNLESS OTHERWISE SPECIFIED DIMENSION IN INCHES. TOLERANCES

DECIMALS	ANGLES
.XXX = .005 .XX = .02 .X = .1	±0° 30'

REMOVE BURRS AND BREAK SHARP CORNERS SURFACE QUALITY ✓

MATERIAL —"—

FINISH —"—

		DATE
DRN.	J Faberoy	12/1/71
CHK'D.	E Ralph	1-25-72
ENG.	P Duvant	1-25-72
PROJ. ENG.	P Duvant	1-25-72
PROD.	K K Peterson	1-26-72

NEXT HIGHER ASSY. B-DD-MM11-L-Ø

SCALE —"—

SHEET 2 OF 2

digital EQUIPMENT CORPORATION MAYNARD MASSACHUSETTS

TITLE STACK SCHEMATIC 4K X 16 BIT

SIZE	CODE	NUMBER	REV.
D	CS	H213-Ø-1	F

DIST.

REV.	REVISIONS	CHANGE NO.	CHK

DRAWING 40-832 15840

DEC FORM NO DRD 102-B

NOTES:
1. ALL COMPONENT LEADS TO BE LESS THAN 1/16 INCHES LONG ON SIDE TWO OF MODULE

MODULES	COMPONENT SUBSTITUTION LIST				
	ORIGINAL PART		SUBSTITUTE PART		
	DESCRIPTION	PART NO.	DESCRIPTION	PART NO.	ITEM NO.
H214, H215, H216	2501-00 - DIODE	19-10010-00	2501-01 DIODE	19-10010-01	2
H214, H215, H216	2501-00 - DIODE	19-10010-00	2501-02 DIODE	19-10010-02	2
H214	2501-00 - DIODE	19-10010-00	2501-03 DIODE	19-10010-03	2

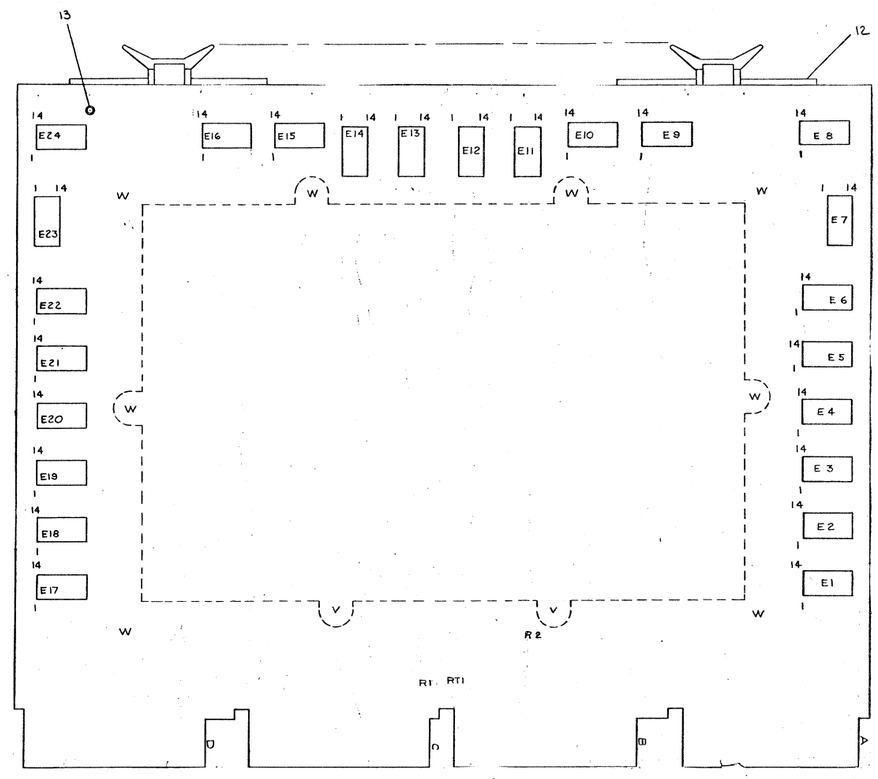

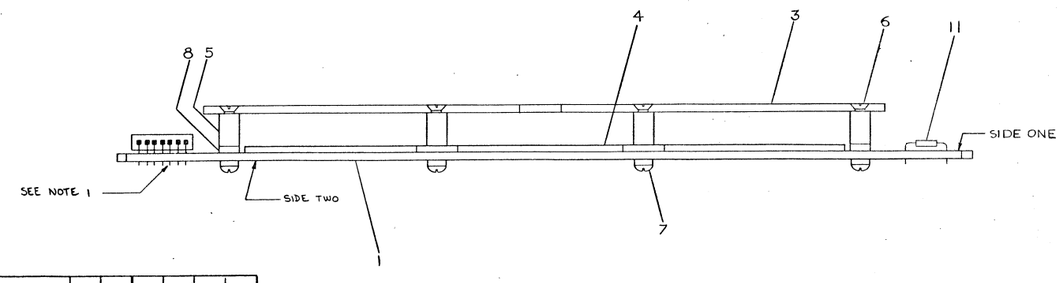

LEGEND	
MODULE CONN.	BACK PANEL LOCATION
A	C
B	D
C	E
D	F

H216	H215	H214				ITEM NO.
1	1	1	RT1	THERMISTOR 300 2%	1309785	16
1	1	1	R2	RESISTOR 5.1 1/4W 5%	1309422	15
1	1	1	R1	RESISTOR 196 1/8W 1%	1302956	14
8	8	8		EYELET	0006732	13
4	4	4		HANDEL, GREEN	9008337-0-1	12
2	2	2		JUMPER,	VENDOR SUPP	11
1	1	1		STICKER WITH DEC PART & PO NO		10
19	18	16		8132-CORE MATS (STRUNG)		9
4	4	4		WASHER, NYLON 1/2 X 1/4 (#40 HOLE)		8
10	10	10		SCREW NYLON FILISTER #6-40 X .187 LG.		7
10	10	10		SCREW, FLAT HEAD NYLON #6-40 X .187 LG.		6
10	10	10		STANDOFF, THREADED #6-40 X .INDIA 1/4 LG.		5
1	1	1		SUBSTRATE		4
1	1	1		COVER PLATE	VENDOR SUPP	3
24	24	24	E1 THRU E24	I.C. DIODE 2501	19-10010	2
1	1	1		PLANER MEMORY BOARD	5009713	1
QTY	QTY	QTY.	REF DESIGNATION	DESCRIPTION	PART NO.	ITEM NO.

PARTS LIST

FIRST USED ON DIST/REV	
MM11-L	
ETCH BOARD REV	

DEC NO.	EIA NO.	DEC NO.	EIA NO.

SEMICONDUCTOR CONVERSION CHART

REV.	CHANGE NO.	REVISIONS
A	ORIGINATED	
B	H214-00001	9/29/72
C	H214-00002	11-8-73
D		1-29-73
E	H214-00004	9/18/73
F	H214-00005	11/14/73

DRN		DATE 5-7-71
CHKD		DATE 1-10-73
ENG		DATE 1-10-73
PROJ. ENG.		DATE 1-10-73
PROD.		DATE 1/29/74
REF MILITARY SPEC.	B-DD-MM11-L-0	
SCALE	—	
SHEET	OF 2	

DIGITAL EQUIPMENT CORPORATION. MAYNARD, MASSACHUSETTS

TITLE: STACK SCHEMATIC (H214 8K X 16BIT) (H215 8K X 18BIT) (H216 8K X 19BIT)

SIZE	CODE	NUMBER	REV.
E	CS	H214-0-1	F

SCALE — SHEET OF 2 DIST.

IC TYPE	GND	+5V
GND AND 5V ARE USUALLY PIN 7 AND 14 RESPECTIVELY EXCEPTIONS ARE STATED ABOVE		

IC PIN LOCATIONS

ITEM NO	AWG	FROM PT	TO PT

JUMPER LIST

DEC FORM NO. DIS 340

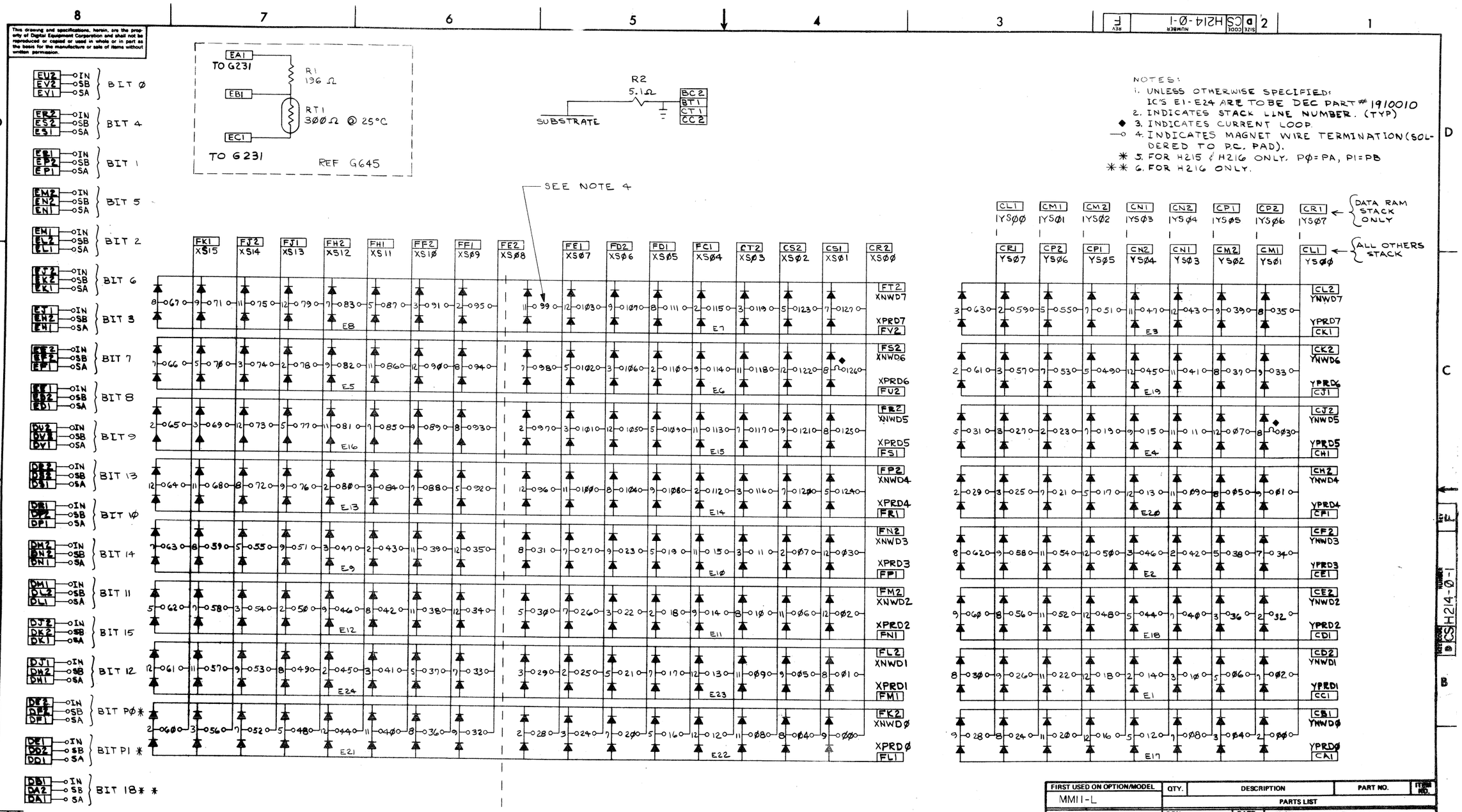

NOTES:
1. UNLESS OTHERWISE SPECIFIED: IC'S E1-E24 ARE TO BE DEC PART # 1910010
2. INDICATES STACK LINE NUMBER. (TYP)
◆ 3. INDICATES CURRENT LOOP.
—o 4. INDICATES MAGNET WIRE TERMINATION (SOLDERED TO P.C. PAD).
✱ 5. FOR H215 & H216 ONLY. PØ=PA, P1=PB
✱✱ 6. FOR H216 ONLY.

FIRST USED ON OPTION/MODEL	QTY.	DESCRIPTION	PART NO.	ITEM NO.
MM11-L		PARTS LIST		

UNLESS OTHERWISE SPECIFIED DIMENSION IN INCHES. TOLERANCES

DECIMALS	ANGLES
.XXX = .005 .XX = .02 .X = .1	±0° 30'

REMOVE BURRS AND BREAK SHARP CORNERS SURFACE QUALITY ✓

MATERIAL —//—

FINISH —//—

		DATE
DRN.	F. Carberry	11/22/71
CHK'D.	Y. Bakalyar	1-21-72
ENG.	P.D. Durant	1/25/72
PROJ. ENG.	P.D. Durant	1/25/72
PROD.	R.K. Peterson	1-26-72

NEXT HIGHER ASSY. B-DD-MM11-L-Ø

SCALE —//—

SHEET 2 OF 2

digital EQUIPMENT CORPORATION MAYNARD MASSACHUSETTS

TITLE STACK SCHEMATIC (H214-8K X 16 BIT) (H215-8K X 18 BIT) (H216-8K X 19 BIT)

SIZE	CODE	NUMBER	REV.
D	CS	H214-Ø-1	F

DIST.

REVISIONS

CHANGE NO.	REV

DEC FORM NO DRD 102-B

NOTES:
✳ 1. ALL ARROWS SHOW SIGNAL FLOW DIRECTION.
✳✳ 2. MATRIX SHOWN IS FOR ILLUSTRATION ONLY.
✳✳✳ 3. ACTUAL MATRIX HAS { Y AXIS 8PRD, 8NRD, 8SS; X AXIS 4K 8PRD, 8NRD, 8SS; X AXIS 8K 8PRD, 8NRD, 16SS }

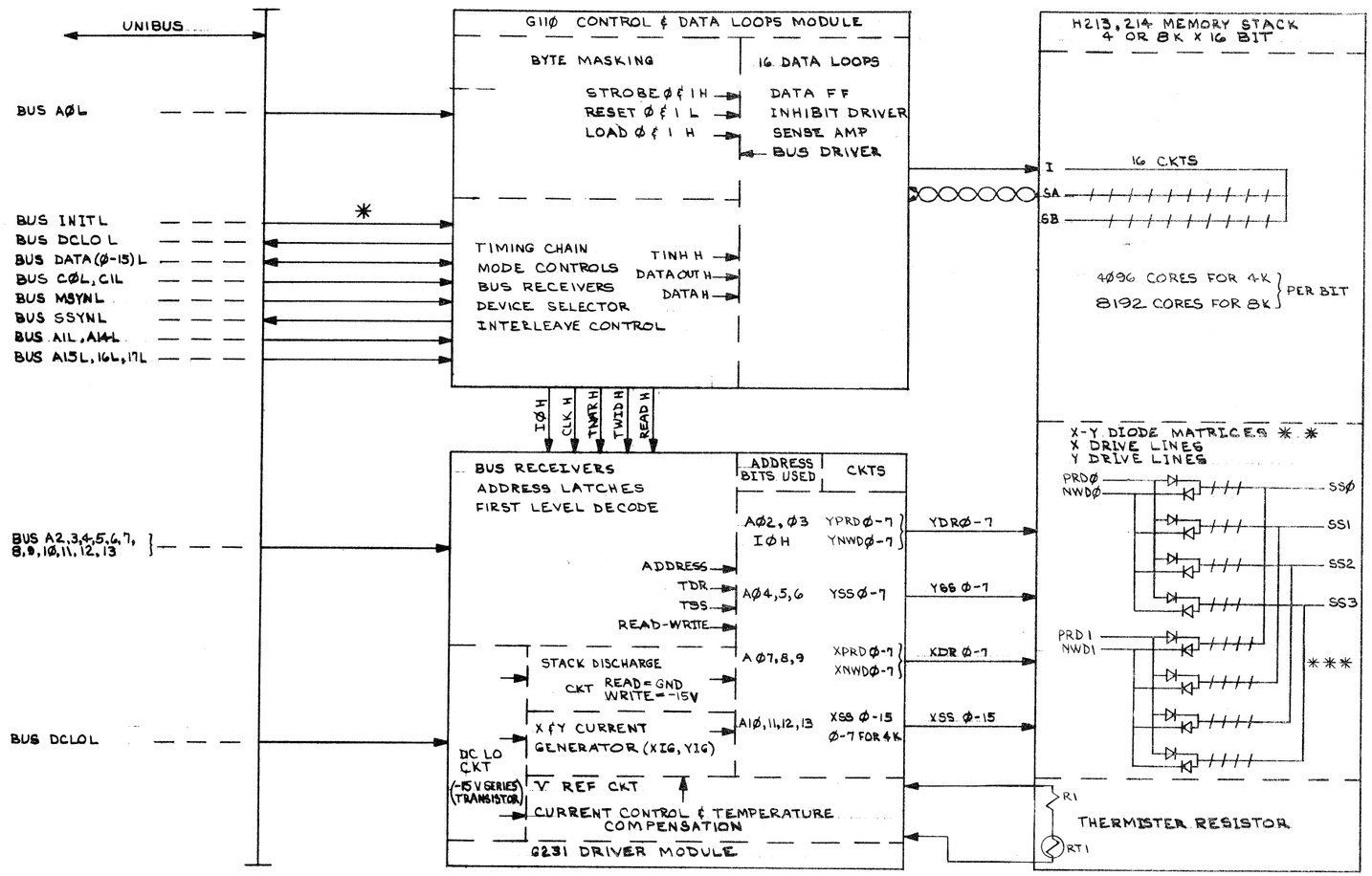

FIRST USED ON OPTION/MODEL	QTY.	DESCRIPTION	PART NO.	ITEM NO.
MM11-S		PARTS LIST		

UNLESS OTHERWISE SPECIFIED DIMENSION IN INCHES. TOLERANCES

DECIMALS	ANGLES
.XXX = .005 .XX = .02 .X = .1	±0° 30'

REMOVE BURRS AND BREAK SHARP CORNERS SURFACE QUALITY ✓

MATERIAL —"—

FINISH —"—

		DATE
DRN.	L. Carberry	1/14/72
CHK'D.	L. Balagh	2-16-72
ENG.	P. Durgin	3-29-72
PROJ. ENG.	P. Durgin	3-29-72
PROD.	Jack Lorman	6-2-72

digital EQUIPMENT CORPORATION MAYNARD, MASSACHUSETTS

TITLE: BLOCK DIAGRAM

NEXT HIGHER ASSY.: B-DD-MM11-S

SIZE: D | CODE: BD | NUMBER: MM11-S-2 | REV.

SCALE —"—

SHEET 1 OF 2

REVISIONS: REV. | CHANGE NO. | CHK

DEC FORM NO DRD 102-B

MEMORY BANK	MACHINE ADDRESS	W1 ✳	W5 A13 △	W6 □ A14 OR A01	W4 A15	W3 A16	W2 A17L	△ W9 4K-8K	W10
0-4K	000000-017776	IN	IN	IN	IN	IN	IN		
4-8K	020000-037776		OUT	IN	IN	IN	IN		
8-12K	040000-057776		IN	OUT	IN	IN	IN		
12-16K	060000-077776		OUT	OUT	IN	IN	IN		
16-20K	100000-117776		IN	IN	OUT	IN	IN		
20-24K	120000-137776		OUT	IN	OUT	IN	IN		
24-28K	140000-157776		IN	OUT	OUT	IN	IN		
28-32K	160000-177776		OUT	OUT	OUT	IN	IN		
32-36K	200000-217776		IN	IN	IN	OUT	IN		
36-40K	220000-237776		OUT	IN	IN	OUT	IN		
40-44K	240000-257776		IN	OUT	IN	OUT	IN		
44-48K	260000-277776		OUT	OUT	IN	OUT	IN		
48-52K	300000-317776		IN	IN	OUT	OUT	IN		
52-56K	320000-337776		OUT	IN	OUT	OUT	IN		
56-60K	340000-357776	IN	IN	OUT	OUT	OUT	IN		
60-64K	360000-377776		OUT	OUT	OUT	OUT	IN		
64-68K	400000-417776		IN	IN	IN	IN	OUT		
68-72K	420000-437776		OUT	IN	IN	IN	OUT		
72-76K	440000-457776		IN	OUT	IN	IN	OUT		
76-80K	460000-477776		OUT	OUT	IN	IN	OUT		
80-84K	500000-517776		IN	IN	OUT	IN	OUT		
84-88K	520000-537776		OUT	IN	OUT	IN	OUT		
88-92K	540000-557776		IN	OUT	OUT	IN	OUT		
92-96K	560000-577776		OUT	OUT	OUT	IN	OUT		
96-100K	600000-617776		IN	IN	IN	OUT	OUT		
100-104K	620000-637776		OUT	IN	IN	OUT	OUT		
104-108K	640000-657776		IN	OUT	IN	OUT	OUT		
108-112K	660000-677776		OUT	OUT	IN	OUT	OUT		
112-116K	700000-717776		IN	IN	OUT	OUT	OUT		
116-120K	720000-737776		OUT	IN	OUT	OUT	OUT		
120-124K	740000-757776		IN	OUT	OUT	OUT	OUT		
DEVICE USED AS 4K MEMORY △		IN	X	X	X	X	X	IN	OUT

W7-8 INTER LEAVE □

WHEN USED AS A 4K OR A NON INTER-LEAVED 8K JUMPERS ARE

WHEN USED AS AN 8K INTERLEAVED (2-8K BANKS REQUIRED) JUMPERS ARE

W11 PROTECT

WHEN W11 IS INSTALLED IT MAKES THE MEMORY DO A DATI RE-GARDLESS OF THE STATE OF THE C00 AND C01 LINES

NOTES:

✳1. W1 IS FOR TEST PURPOSES ONLY

△2. WHEN USED AS AN 8K BANK, W5 AND W10 MUST BE INSTALLED AND W9 MUST BE OUT.
WHEN USED AS A 4K BANK W10 MUST BE OUT, W9 MUST BE IN AND W5 DETERMINES THE BANKS LOCATION ON THE BUS.

□3. THIS MEMORY CAN ONLY BE INTERLEAVED AS 16K (TWO ADJACENT, CONTIGUOUS ADDRESS 8K BANKS). WHEN NOT INTER-LEAVED (SOLID JUMPERS ON W7 AND W8) THE DEVICE SELECT IS AS SHOWN IN TABLE 1 USING A14. WHEN TWO 8K BANKS ARE INTER-LEAVED W7 AND W8 MUST BE AS SHOWN IN DOTTED LINES IN TABLE 1. ALSO IN TABLE 1, A01 NOW GOES TO THE DEVICE SELECTOR GATE CONTROLLED BY W6. THE TWO BANKS MUST HAVE W6 IN ON ONE BANK AND OUT ON THE OTHER.

4. FIGURE 1 SHOWS THE PHYSICAL LOCATION OF THE JUMPERS ON THE G110 IF THE MODULE WERE LYING ON THE PRINT WITH COMPONENTS UP AND CONNECTORS TOWARD BOTTOM OF PRINT. W7 & W8 ARE AS SHOWN SCHEMATICALLY ON D-CS-G110-0-1

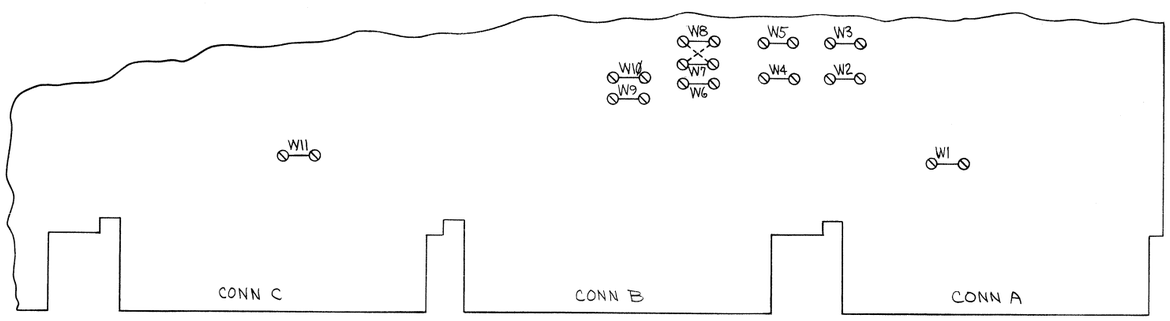

FIGURE 1
G110 JUMPER PHYSICAL LOCATION
SEE NOTE 4

FIRST USED ON OPTION/MODEL	QTY.	DESCRIPTION	PART NO.	ITEM NO.
MM11-S		PARTS LIST		

UNLESS OTHERWISE SPECIFIED DIMENSION IN INCHES. TOLERANCES

DECIMALS	ANGLES
.XXX = .005	±0° 30'
.XX = .02	
.X = .1	

REMOVE BURRS AND BREAK SHARP CORNERS SURFACE QUALITY ✓

MATERIAL —//—

FINISH —//—

DRN.		DATE 5/15/72
CHK'D.		DATE 5-25-72
ENG.		DATE 5-22-72
PROJ. ENG.		DATE 5-22-72
PROD.		DATE 6-2-72

NEXT HIGHER ASSY. B-DD-MM11-S-0

SCALE —//—

SHEET 2 OF 2

digital EQUIPMENT CORPORATION MAYNARD, MASSACHUSETTS

TITLE BLOCK DIAGRAM (DEVICE DECODING)

SIZE	CODE	NUMBER	REV.
D	BD	MM11-S-2	

DIST.

REVISIONS		
CHK	CHANGE NO	REV

DEC FORM NO DRD 109-A

D BD MM11-S-2 REV.

DIGITAL EQUIPMENT CORPORATION
MAYNARD, MASSACHUSETTS

PARTS LIST

MADE BY F. CARBERRY DATE 1/5/72	CHECKED J Kalagher DATE 1-25-72	SECTION
ENG P. Duvant DATE 1/25/72	PROD R K Peterson DATE 1-26-72	ISSUED SECT.

ITEM NO.	DWG NO./PART NO.	DESCRIPTION	QUANTITY/VARIATION MM11-L	MM11-K
1	B-DD-H213-Ø	H213 MEMORY STACK (4K X 16)		1
2	E-CS-G231-Ø-1	MEMORY DRIVER	1	1
3	E-CS-G11Ø-Ø-1	CONTROL & DATA LOOPS	1	1
4	B-DD-H214-Ø	H214 MEMORY STACK (8K X16)	1	

TITLE	ASSY NO.	SIZE	CODE	NUMBER	REV.	ECO NO
MEMORY, MM11	//	A	PL	MM11-L-Ø		
	SHEET 1 OF 1	DIST.				

DEC FORM DEC 16 (325) 1031 N870
DRA 110

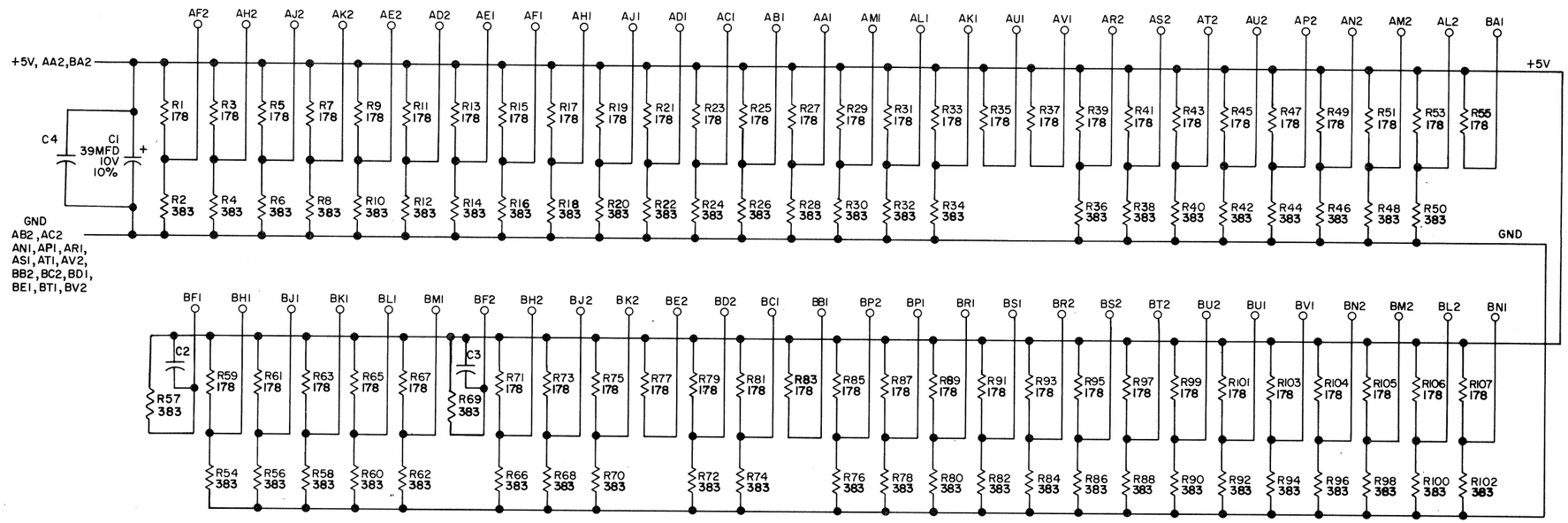

UNLESS OTHERWISE INDICATED:
RESISTORS ARE 1/4W, 1%
CAPACITORS ARE .001 UF, 250V, 20%

SIZE	CODE	NUMBER	REV.
C	CS	M930-0-1	C

REVISIONS			
CHK	CHG NO.	REV.	
	00001	A	
	00002	B	
	00003	C	
D. J. Haile 5-29-73			
P. JANSON 6-5-73			

DRN. BUTLER	DATE 11-21-69	
CHK'D	DATE 12-3-69	
ENG'D	DATE	
PROD.	DATE	

TRANSISTOR & DIODE CONVERSION CHART

DEC	EIA	DEC	EIA

digital EQUIPMENT CORPORATION
MAYNARD, MASSACHUSETTS

TITLE BUS TERMINATOR M930

SIZE	CODE	NUMBER	REV.
C	CS	M930-0-1	C

PRINTED CIRCUIT REV. C

DEC FORM NO. DRC 102

5 PINK DIST. 324, 434, 435 5 PINK

digital EQUIPMENT CORPORATION MAYNARD MASSACHUSETTS

DRAWING DIRECTORY

CUSTOMER PRINT SET INDEX

THIS IS PRINT SET

	SEQUENCE
CONSOLE ASSY	D-UA-KY11-J-Ø
CONSOLE ASSY (PL)	A-PL-KY11-J-Ø
JUMPER POWER	B-IA-7409730-0-0
I/O CABLE	C-UA-BCØ8R-Ø3-Ø
CIRCUIT SCHEMATIC	D-CS-5409766-Ø-1
ETCH BOARD ASSY	E-IA-5409766-0-0

UNIT VARIATIONS

VAR	TITLE	PRINT SET KY11-J
KY11-JA	CONSOLE ASSY 11/Ø5	X
KY11-JB	CONSOLE ASSY 11/1Ø	X
KY11-JC	CONSOLE ASSY GT4Ø	X
KY11-JF	CONSOLE ASSY UNICHANNEL 15	X
KY11-JD	CONSOLE ASSY 11/Ø5 (10.5)	X
KY11-JE	CONSOLE ASSY 11/1Ø (10.5)	X

REVISIONS

REV	CHG. NO	DATE
A	KY11J-00004	2/74
B	KY11J-00005	3/74
C	KY11J-00006	3/74
D	KY11J-00007	2/74

USED ON OPTION/MODEL		DRN.	DATE	TITLE
11/Ø5		J.CAHILL	4-23-3	CONSOLE ASSY
		CHK'D. J.CAHILL	DATE 4-23-3	
		PROJ ENG.	DATE 8-29-73	
		PROD.	DATE 8-29-73	SIZE B / CODE DD / NUMBER KY11-J / REV D
		FIELD SERV.	DATE 7-26-73	DIST
SHEET 1	OF 3			

DRB 106

DEC-16-D294-1062-1A-8072

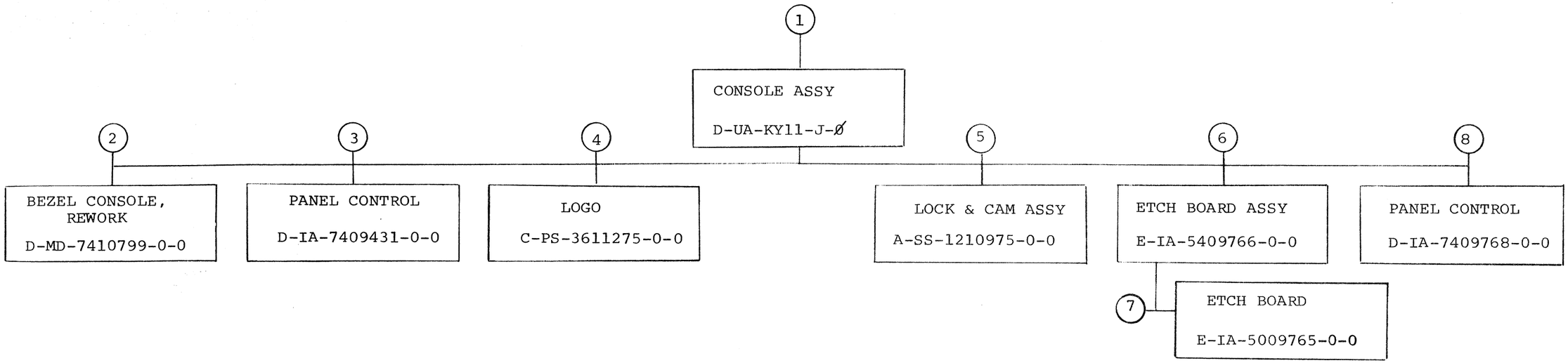

TITLE		SIZE	CODE	NUMBER	REV
CONSOLE ASSY	SHEET OF	B	DD		D

DRB 107
DEC 16—(325)—1062—3—N871

ELECTRICAL

CUSTOMER PRINT SET KY11-J	MFG. SET	FIND NO.	DRAWING NO.	REV	NO OF SHT	DESCRIPTION	OPTION NO./FILE DATE
X		1	D-UA-KY11-J-Ø	N	1	CONSOLE ASSY	
X			A-PL-KY11-J-Ø	N	2	CONSOLE ASSY (PL)	
X			B-IA-7409730-0-0	#	1	JUMPER POWER	
X			C-UA-BCØ8R-Ø3-Ø	#	1	I/O CABLE	
X		6	E-IA-5409766-0-0	#	1	ETCH BOARD ASSY	
X			D-CS-5409766-Ø-1	#	1	CIRCUIT SCHEMATIC	
			B-MH-5409766-Ø-6		1	MODULE ECO HISTORY	
		7	E-IA-5009765-0-0		1	ETCH BOARD	

MECHANICAL

CUSTOMER PRINT SET KY11-J	MFG SET	FIND NO.	DRAWING NO.	REV	NO OF SHT	DESCRIPTION	OPTION NO./FILE DATE
		1	D-UA-KY11-J-Ø	N	1	CONSOLE ASSY	
			A-PL-KY11-J-Ø	N	2	CONSOLE ASSY (PL)	
			C-MD-7409534-0-0		1	ACTUATOR (REWORK)	
			B-IA-7409444-0-0		1	DETENT	
			C-UA-BCØ8R-Ø3-Ø		1	I/O CABLE	
			B-MD-7409867-0-0		1	EXTENDED LEAF REWORK (ACTUATOR)	
			B-MD-7409868-0-0		1	SWITCH ADAPTER PLATE	
			C-MD-7411728-0-0		1	KEY LOCK SWITCH, REWORK	
		2	D-MD-7410799-0-0		1	BEZEL CONSOLE REWORK	
			J-PS-1210922-0-0		1	BEZEL CONSOLE CASTING	
		3	D-IA-7409431-0-0		1	PANEL CONTROL	
			C-SS-7409431-0-1		1	SILK SCREEN (MAGENTA)	
			C-SS-7409431-0-2		1	SILK SCREEN (BLK) REAR	
			C-SS-7409431-0-3		1	SILK SCREEN (11Ø5) VERMILLION	
		4	C-PS-3611275-0-0		1	LOGO	
			A-SS-3611275-0-1		1	SILK SCREEN	
			A-SS-3611275-0-2		1	SILK SCREEN	
			A-SS-3611275-0-3		1	SILK SCREEN	
			A-SS-3611275-0-4		1	SILK SCREEN	
			A-SS-3611275-0-5		1	SILK SCREEN	
		5	A-PS-1210975-0-0		1	LOCK & CAM ASSY	
		6	E-IA-5409766-0-0		1	ETCH BOARD ASSY	
		7	E-IA-5009765-0-0		1	ETCH BOARD	
		8	D-IA-7409768-0-0		1	PANEL CONTROL	
			C-SS-7409768-0-1		1	SILK SCREEN	
			C-SS-7409768-0-2		1	SILK SCREEN	
			C-SS-7409768-0-3		1	SILK SCREEN	

CUSTOMER PRINT SET CODES
X = PRINT OF DOCUMENT INCLUDED IN PRINT SET
C = INCLUDES ALL PRINTS INDICATED ON DOCUMENT
S = CONFIDENTIAL AUTHORIZED SIGNATURE REQUIRED

TITLE	SHEET	SIZE	CODE	NUMBER	REV
CONSOLE ASSY	3 OF 3	B	DD	KY11-J	D

DRB 108
DEC 16-(325)-1062-2B-R972

LEGEND

PART NO.	VARIATION
KY11-JA	1105 CONSOLE WITH L.E.D.S.
KY11-JB	1110 CONSOLE WITH L.E.D.S.
KY11-JC	VT40 CONSOLE WITH L.E.D.S.
KY11-JF	UC15 CONSOLE WITH L.E.D.S.
KY11-JD	10½" 1105 CONSOLE WITH L.E.D.S.
KY11-JE	10½" 1110 CONSOLE WITH L.E.D.S.
KY11-JJ	INDUSTIAL CONSOLE WITH L.E.D.S.

NOTES:

1. CASTING KEY HOLE, SURFACES A & B TO BE COATED WITH LUBE (ITEM # 18)
2. LOCK WASHER IS NOT USED ON SCREW UNDER SWITCH.
3. INSERT CONTROL PANEL (ITEM #27, 30, 31 OR 34) USING ADHESIVE TRANSFER TAPE (ITEM #28) ON REAR SURFACE & PRESS FIRMLY IN PLACE.
4. INSTALL 18 INCHES OF TAPE (ITEM #39) ON UNSHIELDED SIDE OF I/O CABLE BEGINNING AT FAR END OF CABLE FROM CONSOLE. ALL VARIATIONS EXCEPT JD AND JE.

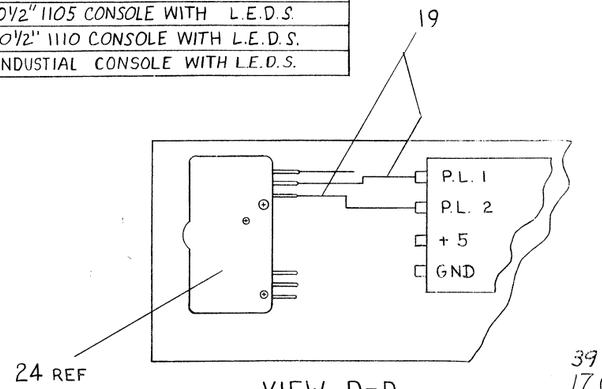

VIEW D-D
SCALE: NONE

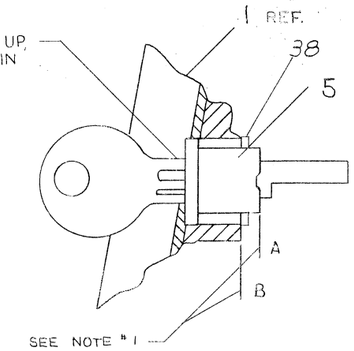

SECTION C-C
SCALE: 2/1

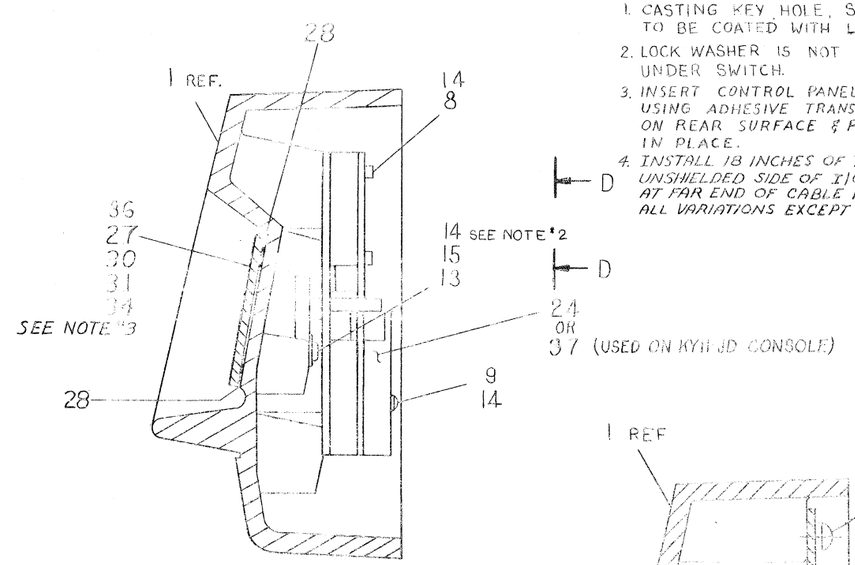

SECTION B-B
SCALE: 2/1

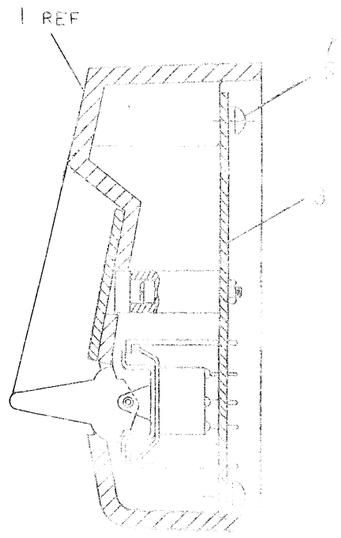

SECTION A-A

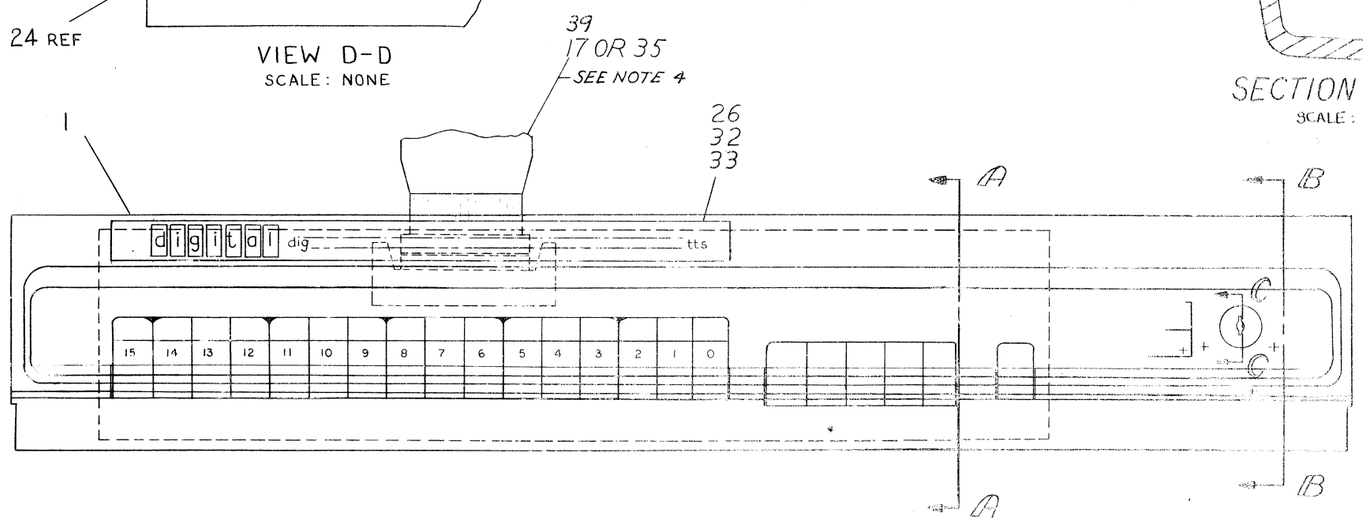

REVISIONS				
CHK	CHANGE NO.	REV		
	KY11-00001	D	REVISED & REDRAWN.	11-20-72
G. GRAHAM				11-28-72
	11/05-00040	E		1-19-73
			M. TITELBAUM	
	DWG NO WAS KY11-0-0			
	KY11J-00001	F		2-9-73
G. GRAHAM				2-12-73
	KY11J-00002	H		7-12-73
RANDALL				7-16-73
	KY11J-00003	J		11-20-73
F. ELIA				11-20-73
	KY11J-00004	K		6-25-74
B. MINOR				2-27-74
	KY11J-00005	L		4-3-74
G. GRAHAM				4-12-74
	KY11J-00006	M		4-23-74
GRAHAM				4-30-74
	KY11J-00007	N		5-7-74
RANDALL				5-7-74

DEC FORM NO. DRD 100

FIRST USED ON SYSTEM/MODEL: PDP 1105

DO NOT SCALE DRAWING
UNLESS OTHERWISE SPECIFIED
DIMENSION IN INCHES
TOLERANCES
DECIMALS ± .005 FRACTIONS ± 1/64 ANGLES ± 0°30'
FINAL SURFACE QUALITY
REMOVE BURRS AND BREAK SHARP CORNERS
MATERIAL
FINISH

QTY.	DESCRIPTION	PART NO.	ITEM NO.
	PARTS LIST		

DRN. CAHILL	DATE 11-16-71	DIGITAL EQUIPMENT CORPORATION MAYNARD, MASSACHUSETTS
CHK'D. TESCHNER	DATE 11-14-72	TITLE
ENG. GRAHAM	DATE 11-5-72	CONSOLE ASSY (PDP 11/05)
PROJ. ENG. WEEKS	DATE 11-5-72	
PROD. PETERSON	DATE 5-10-72	
NEXT HIGHER ASSY D-UA-1105-0-0		
SCALE 1/1		SIZE D CODE UA NUMBER KY11-J-0 REV N
SHEET 1 OF 1		DIST.

NUMBER KY11-J-0 REV N

DIGITAL EQUIPMENT CORPORATION
MAYNARD, MASSACHUSETTS

PARTS LIST

MADE BY	R. ROBICHAUD	CHECKED	C. TESCHNER	SECTION
DATE	12-8-71	DATE	5-1-72	1
ENG	G. Graham	PROD	R. K. PETERSON	ISSUED SECT.
DATE	4-5-72	DATE	5-10-72	1

ITEM NO.	DWG NO./PART NO.	DESCRIPTION	KY11-JA	KY11-JB	KY11-JC	KY11-JF	KY11-JD	KY11-JE	KY11-JJ
1	D-MD-7410799-0-0	CONSOLE BEZEL REWORK	1	1	1	1	1	1	1
~~2~~	~~E-IA-7409374-3-0~~	~~BEZEL CONSOLE (11/10)~~	~~X~~	~~1~~	~~X~~	~~X~~			—
3	E-IA-5409766-0-0	CONSOLE ETCH BOARD ASSY	1	1	1	1	1	1	1
~~4~~	~~E-IA-5409766-2-0~~	~~CONSOLE ETCH BOARD ASSY (OPOCA)~~	~~X~~	~~X~~	~~1~~				—
5	A-PS-1210975-0-0	LOCK & CAM ASS'Y	1	1	1	1	1	1	1
6	9006020-1	SCR, PHL PAN HD. #6-32 X 1/4 LG	6	6	6	6	6	6	6
7	9006633	WASH INT TOOTH LOCK #6	6	6	6	6	6	6	6
8	9006003-1	SCR PHL PAN HD # 2-56 X 3/8 LG	2	2	2	2	2	2	2
9	9008025-1	SCR PHL PAN HD #2-56 X 5/8 LG	2	2	2	2	2	2	2
10	~~1210790-0-0~~	~~SWITCH DPST N.O.~~	~~1~~	~~1~~	~~1~~				—
11	~~C-MD-7409534-0-0~~	~~ACTUATOR RE-WORK~~	~~1~~	~~1~~	~~1~~				—
12	~~1210905-1~~	~~INSULATOR~~	~~2~~	~~2~~	~~2~~				—
13	B-IA-7409444-0-0	DETENT	1	1	1	1	1	1	1
14	9006686	WASH #2 SPLIT LOCK	5	5	5	6	5	5	5
15	9006000-4	SCR BINDER HD #2-56 X3/16 LG	2	2	2	2	2	2	2
16	~~1210904-1~~	~~SWITCH TMD 5201 (COLD CONTACT-291-5201-00)~~	~~1~~	~~1~~	~~1~~				—
17	C-UA-BC08R-Ø3	I/O CABLE (3'-0" LG)	1	1	1	1	X	X	1
18	4901077	LUBE (FOR CAM LOCK)	A/R	A/R	A/R	A/R			A/R
19	B-IA-7409730-0-0	JUMPER, POWER	2	2	2	2	2	2	2
20	~~B-MD-7409868-0-0~~	~~SWITCH ADAPTER PLATE~~	~~1~~	~~1~~	~~1~~				—
21	~~B-MD-7409867-0-0~~	~~EXTENDER LEAF REWORK (ACTUATOR)~~	~~1~~	~~1~~	~~1~~				—
22	~~9008449-2~~	~~SCR PHL FLAT HD #2-56 X 1/4 LG.~~	~~2~~	~~2~~	~~2~~				—

TITLE	ASSY NO.	SIZE	CODE	NUMBER	REV.	ECO NO
CONSOLE ASSY (PDP11/05)	D-UA-KY11-J-Ø	A	PL	KY11-J-Ø	N	KY11J-00007
	SHEET 1 OF 2	DIST.	G			

DIGITAL EQUIPMENT CORPORATION
MAYNARD, MASSACHUSETTS

PARTS LIST

MADE BY	R. ROBICHAUD	CHECKED	C. TESCHNER	SECTION
DATE	12-8-71	DATE	5-1-72	1
ENG	G. GRAHAM	PROD	K. PETERSON	ISSUED SECT.
DATE	4-5-72	DATE	5-10-72	1

ITEM NO.	DWG NO./PART NO.	DESCRIPTION	KY11-JA	KY11-JB	KY11-JC	KY11-JF	KY11-JD	KY11-JE	KY11-JJ
~~23~~	~~E-IA-7409374-4-0~~	~~BEZEL CONSOLE (VT40)~~	~~X~~	~~X~~	~~1~~	~~X~~			—
24	A-PS-1210982-0-0	KEY LOCK SWITCH	1	1	1	1		1	1
~~25~~	~~E-IA-7409374-5-0~~	~~BEZEL CONSOLE (UC15)~~	~~X~~	~~X~~	~~X~~	~~1~~			—
26	C-PS-3611275-0-0	LOGO (PDP-1105) NOTE VARIATIONS	1	1	X	X	1	1	1
27	D-IA-7409431-1-0	PANEL CONTROL (1105)	1	X	X	X	1	X	X
28	9009210-1	ADHESIVE TRANSFER TAPE ¼ WIPE	A/R	A/R	A/R	A/R	A/R	A/R	A/R
~~29~~	~~1211052~~	~~CONSOLE PROTECTIVE COVER~~	~~1~~	~~1~~	~~1~~	~~1~~	~~1~~	~~1~~	~~1~~
30	D-IA-7409431-3-0	PANEL CONTROL (1110)	X	1	X	X	X	1	X
31	D-IA-7409768-0-0	PANEL CONTROL (GT40)	X	X	1	X	X	X	X
32	C-PS-3611275-4-0	LOGO (DEC GRAPHIC)	X	X	1	X	X	X	X
33	C-PS-3611275-5-0	LOGO (UC15)	X	X	X	1	X	X	X
34	D-IA-7409431-4-0	PANEL CONTROL (UC15)	X	X	X	1	X	X	X
35	C-UA-BC08R-64	IØ CABLE (4'-0"LG)	X	X	X	X	1	1	X
36	D-IA-7411393-Ø-Ø	INDICATOR PANEL (INDUSTRIAL)	X	X	X	X	X	X	1
37	C-MD-7411728-0-0	KEY LOCK SWITCH, REWORK	X	X	X	X	1	X	X
38	9009589	RETAINING RING .025 THK	1	1	1	1	1	1	1
39	9009339	TAPE CLOTH WATERPROOF 2" WIDE GRAY	A/R	A/R	A/R	A/R	X	X	A/R

TITLE	ASSY NO.	SIZE	CODE	NUMBER	REV.	ECO NO
CONSOLE ASSY (PDP11/05)	D-UA-KY11-J-Ø	A	PL	KY11-J-Ø	N	
	SHEET 2 OF 2	DIST.	G			

LEGEND

NUMBER	DIM "X"	COLOR	ITEM
7409730-Ø1	5 1/2"	BLACK	5

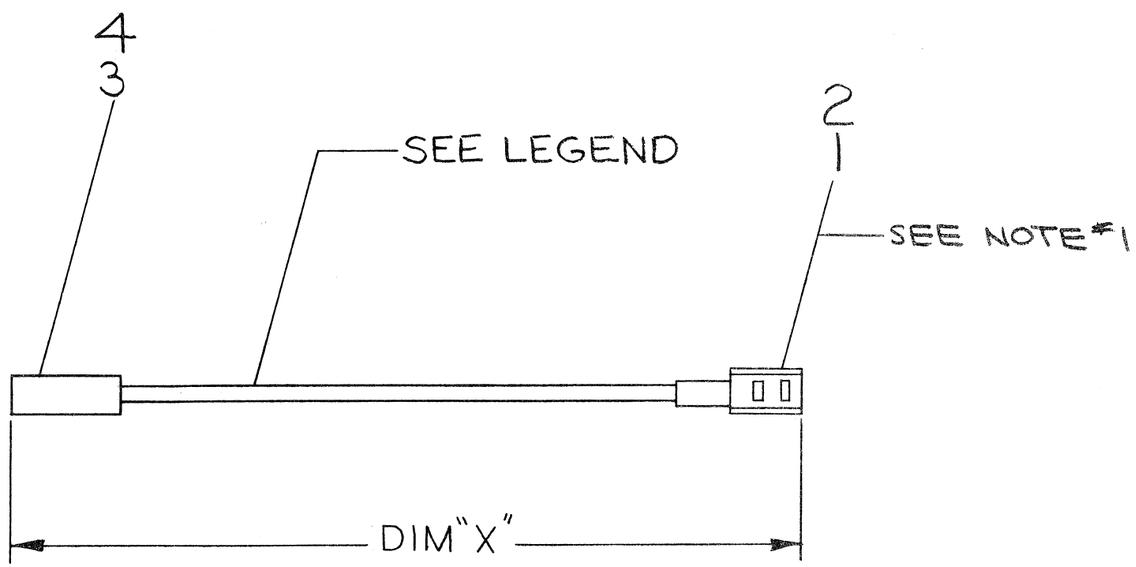

NOTES:

1. ITEM #2 (SHRINK TUBING) TO COVER CONTACT AREA OF ITEM #1 (SOLDERLESS CONN.)

QTY.	DESCRIPTION	PART NO.	ITEM NO.
A/R	WIRE, #18 AWG, BLK	9072/8-00	5
1	MINI FASTAB #60291-1	1210820-2	4
1	HOUSING, 1-480417-C	1210820-1	3
1	TUBING, SHRINK (WHITE)	9107252	2
1	SOLDERLESS CONN. 50402	9007917	1

PARTS LIST

FIRST USED ON OPTION MODEL
PDP-11Ø5

DRN. CBMcG DATE 4-11-72
CHK'D. G. Teschner DATE 4-19-72
ENG. G. Gerhardt DATE 4-19-72
PROD. ENG. L.D. Wells DATE 4-28-72
PROD. R.K. Peterson DATE 4/27/72
NEXT HIGHER ASSEMBLY
SCALE NONE
SHEET 1 OF 1

DIGITAL EQUIPMENT CORPORATION
MAYNARD, MASSACHUSETTS

TITLE JUMPER, POWER

SIZE/CODE B 1A NUMBER 7409730-0-0 REV.

DIST.

REVISIONS	CHANGE NO.	REV.
CHK		

DEC FORM NO. DRB 109

WIRE TABLE

FROM	TO	FROM	TO
P1-A	P2-VV	P1-Y	P2-X
P1-B	P2-UU	P1-Z	P2-W
P1-C	P2-TT	P1-AA	P2-V
P1-D	P2-SS	P1-BB	P2-U
P1-E	P2-RR	P1-CC	P2-T
P1-F	P2-PP	P1-DD	P2-S
P1-H	P2-NN	P1-EE	P2-R
P1-J	P2-MM	P1-FF	P2-P
P1-K	P2-LL	P1-HH	P2-N
P1-L	P2-KK	P1-JJ	P2-M
P1-M	P2-JJ	P1-KK	P2-L
P1-N	P2-HH	P1-LL	P2-K
P1-P	P2-FF	P1-MM	P2-J
P1-R	P2-EE	P1-NN	P2-H
P1-S	P2-DD	P1-PP	P2-F
P1-T	P2-CC	P1-RR	P2-E
P1-U	P2-BB	P1-SS	P2-D
P1-V	P2-AA	P1-TT	P2-C
P1-W	P2-Z	P1-UU	P2-B
P1-X	P2-Y	P1-VV	P2-A

LEGEND

NUMBER	DIM "X"	PRECUT LENGTH
BCØ8R-Ø1	1 FT	1FT 1.5 IN ± 1 IN
BCØ8R-Ø2	2 FT	2FT 1.5 IN ± 1 IN
BCØ8R-Ø3	3 FT	3FT 1.5 IN ± 1 IN
BCØ8R-Ø4	4 FT	4FT 1.5 IN ± 1 IN
BCØ8R-Ø6	6 FT	6FT 1.5 IN ± 2 IN
BCØ8R-Ø8	8 FT	8FT 1.5 IN ± 2 IN
BCØ8R-1Ø	1Ø FT	1ØFT 1.5 IN ± 2 IN
BCØ8R-12	12 FT	12 FT 1.5 IN ± 3 IN
BCØ8R-2Ø	2Ø FT	2ØFT 1.5 IN ± 3 IN
BCØ8R-25	25 FT	25FT 1.5 IN ± 3 IN
BCØ8R-3Ø	3Ø FT	3ØFT 1.5 IN ± .6 FT
BCØ8R-5Ø	5Ø FT	5ØFT 1.5 IN ± 1 FT
BCØ8R-6Ø	6Ø FT	6ØFT 1.5 IN ± 1.2 FT
BCØ8R-75	75 FT	75FT 1.5 IN ± 1.5 FT
BCØ8R-AØ	1ØØ FT	1ØØFT 1.5 IN ± 2 FT
BCØ8R-A3	13Ø FT	13ØFT 1.5 IN ± 2.6 FT
BCØ8R-A6	16Ø FT	16ØFT 1.5 IN ± 3.2 FT

NOTES:

1. ASSEMBLE THIS CABLE PER PROCESS SPEC #76Ø6485-Ø-Ø.
2. CONNECTOR LEGEND IDENTIFICATION TO BE PLACED ON SHIELD SIDE OF CABLE IN THIS AREA AS SHOWN.
3. INSPECTION & TEST STAMPS TO BE PLACED AT EACH END OF THE CABLE ASSEMBLY.

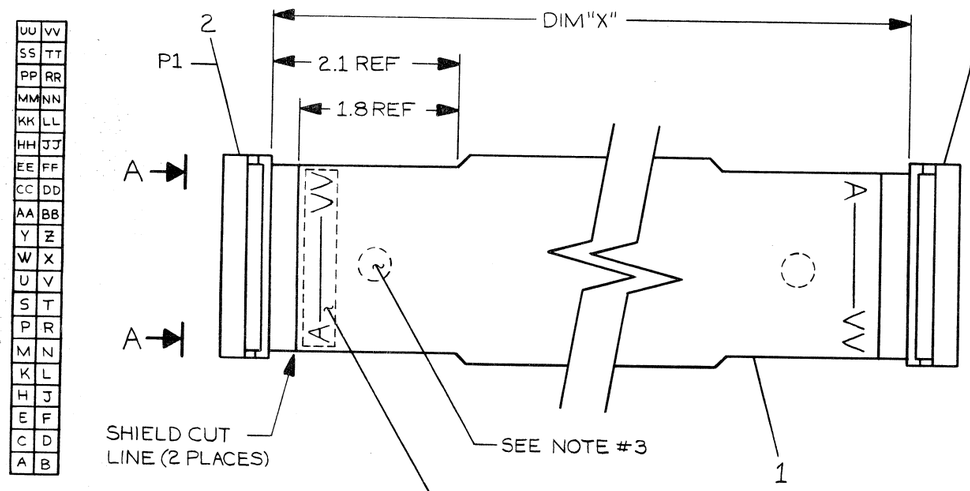

VIEW A-A
CONN. LEGEND REF.

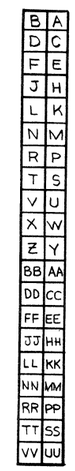

VIEW B-B
CONN. LEGEND REF.

ITEM NO.	PART NO.	DESCRIPTION	QTY.
2	1211206	CONNECTOR, 4Ø SOCKET	2
1	1700004	CABLE, 4Ø COND. FLAT W/SHIELD	A/R

PARTS LIST

FIRST USED ON OPTION/MODEL: —/—/—

UNLESS OTHERWISE SPECIFIED DIMENSION IN INCHES

TOLERANCES

DECIMALS	ANGLES
.xxx = .005	±0° 30'
.xx = .02	
.x = .1	

REMOVE BURRS AND BREAK SHARP CORNERS SURFACE QUALITY √

MATERIAL —/—/—

FINISH —/—/—

		DATE
DRN.	D. FONTAINE	8-28-70
CHK'D.	J. FLEMING	8-28-70
ENG.	P. GARDNER	9-3-70
PROJ. ENG.	P. GARDNER	9-3-70
PROD.	DONALD	9-4-70

NEXT HIGHER ASSY.

SCALE NONE

SHEET 1 OF 1

digital EQUIPMENT CORPORATION MAYNARD MASSACHUSETTS

TITLE

BCØ8R
I/O CABLE

SIZE	CODE	NUMBER	REV.
C	UA	BCØ8R-Ø-Ø	J

DIST.

REVISIONS

CHANGE NO	REV
BCØ8R-00004	J

REVISED & REDRAWN 9-6-74 R. GARDNER 7/17/73

SIZE C CODE UA NUMBER BCØ8R-Ø-Ø REV J

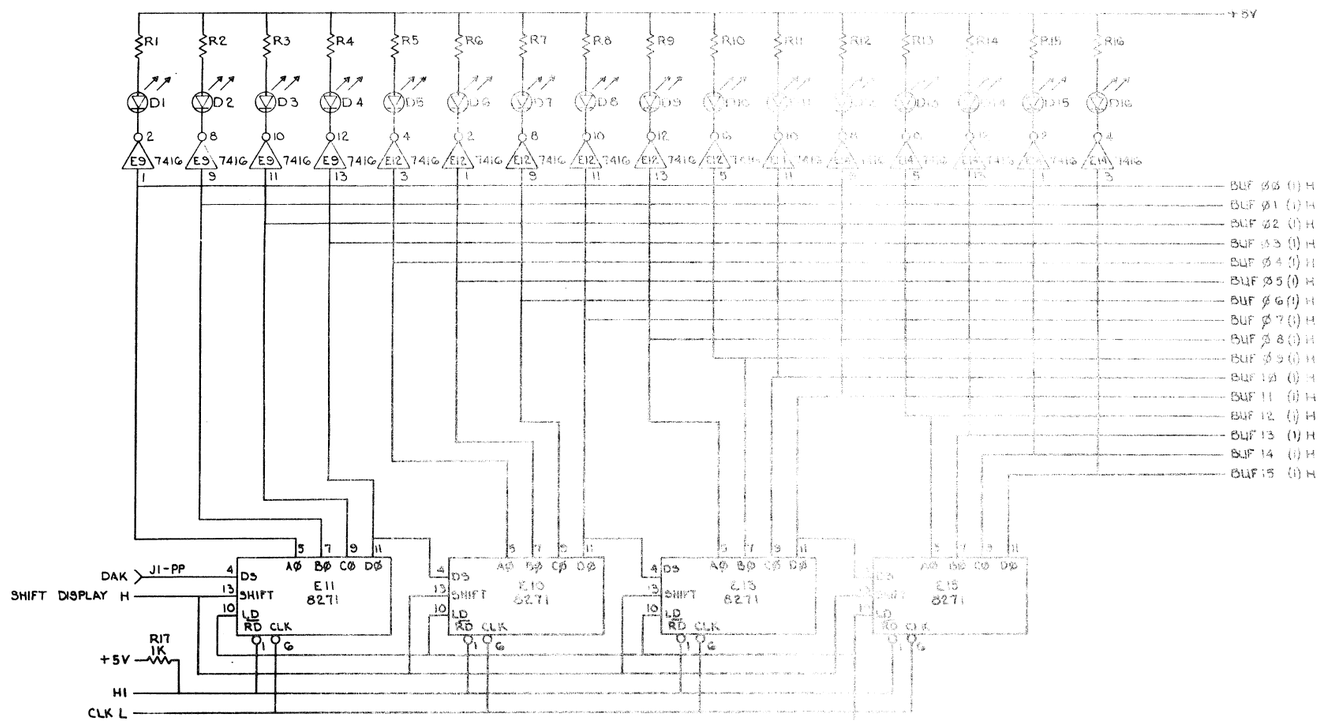

UNLESS OTHERWISE INDICATED:
RESISTORS = 1/4 W, 5%
CAPACITORS = 100V, 5%
DIODES ARE LIGHT EMITTING
PIN 14 = +5V, PIN 7 = GND ON DEC 7404, 7416, 7417
PIN 16 = +5V, PIN 8 = GND ON DEC 8271, 74123, 74193

QTY	REF DESIGNATION	DESCRIPTION	PART NO.

PARTS LIST

STCN BOARD REV E

REC NO.	EIA NO.	REC NO.	EIA NO.

SEMICONDUCTOR CONVERSION CHART

DEVELOPED BY G. GRAHAM 4-9-72
DRAWN BY G. GRAHAM 6/27/73
CHECKED BY R. KRISHNA 7-5-72
PROTOTYPE BY G. GRAHAM 11-6-72
PRODUCTION BY R. KRISHNA 7-5-72
MECH. DESIGN BY R. KRISHNA 7-5-72
MECH. DRAWN BY R. KRISHNA 7-5-72
MECH. CHECKED BY R. KRISHNA 7-5-72
MECH. PROTOTYPE BY R. KRISHNA 7-5-72
MECH. PRODUCTION BY R. KRISHNA 7-5-72
PROJECT ENGR. G. GRAHAM
PRODUCTION ENGR. G. GRAHAM
MECH. PROJECT ENGR. R. KRISHNA
MECH. PRODUCTION ENGR. R. KRISHNA
PROJECT MANAGER R. KRISHNA
MECH. PROJECT MANAGER R. KRISHNA
MECH. PRODUCTION MANAGER R. KRISHNA
PRODUCTION MANAGER R. KRISHNA
DEVELOPED BY 5409766-00002 H
DRAWN BY 5409766-00002 H
CHECKED BY 5409766-00004 E
PROTOTYPE BY 5409766-00005 F
PRODUCTION BY 5409766-00003 D
MECH. DESIGN BY 5409766-00002 REC
MECH. DRAWN BY
MECH. CHECKED BY
MECH. PROTOTYPE BY
MECH. PRODUCTION BY
PROJECT ENGR.
PRODUCTION ENGR.
MECH. PROJECT ENGR.
MECH. PRODUCTION ENGR.
PROJECT MANAGER
MECH. PROJECT MANAGER
MECH. PRODUCTION MANAGER
PRODUCTION MANAGER

DEVELOPED BY
DRAWN BY
CHECKED BY
PROTOTYPE BY
PRODUCTION BY
MECH. DESIGN BY
MECH. DRAWN BY
MECH. CHECKED BY
MECH. PROTOTYPE BY
MECH. PRODUCTION BY
PROJECT ENGR.
PRODUCTION ENGR.
MECH. PROJECT ENGR.
MECH. PRODUCTION ENGR.
PROJECT MANAGER
MECH. PROJECT MANAGER
MECH. PRODUCTION MANAGER
PRODUCTION MANAGER

NEXT HIGHER ASSY B-SA-A0-7766-0-0

DIGITAL EQUIPMENT CORPORATION

TITLE 11/05 CONSOLE

SIZE D CODE CS SCALE NONE DWG NO. 5409766-0-1 REV H

SHEET 1 OF 3

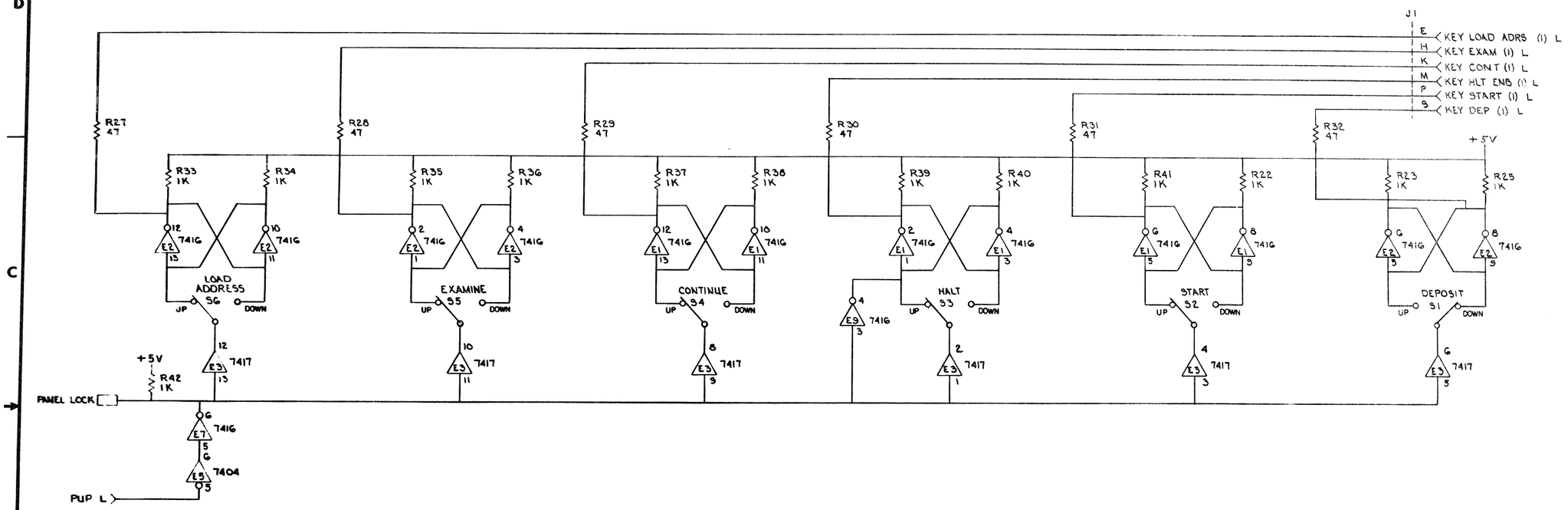

QTY	REF DESIGNATION	DESCRIPTION	PART NO.	ITEM NO.

PARTS LIST

ETCH BOARD REV E

CHANGE NO.	REV	REVISIONS

DEC NO.	EIA NO.	DEC NO.	EIA NO.

SEMICONDUCTOR CONVERSION CHART

DRAWN Roger J Bourassa DATE 13 Jan 71
CHECK DATE
DATE 3-9-71
DATE 3-18-71
DATE 11-22-70
NEXT HIGHER ASSY
E-IA-5409766-0-0
SCALE
SHEET 1 OF 1

EQUIPMENT CORPORATION

TITLE 11/05 CONSOLE

D CS 5409766-0-1 H

SIZE D CODE CS NUMBER 5409766-0-1 REV H

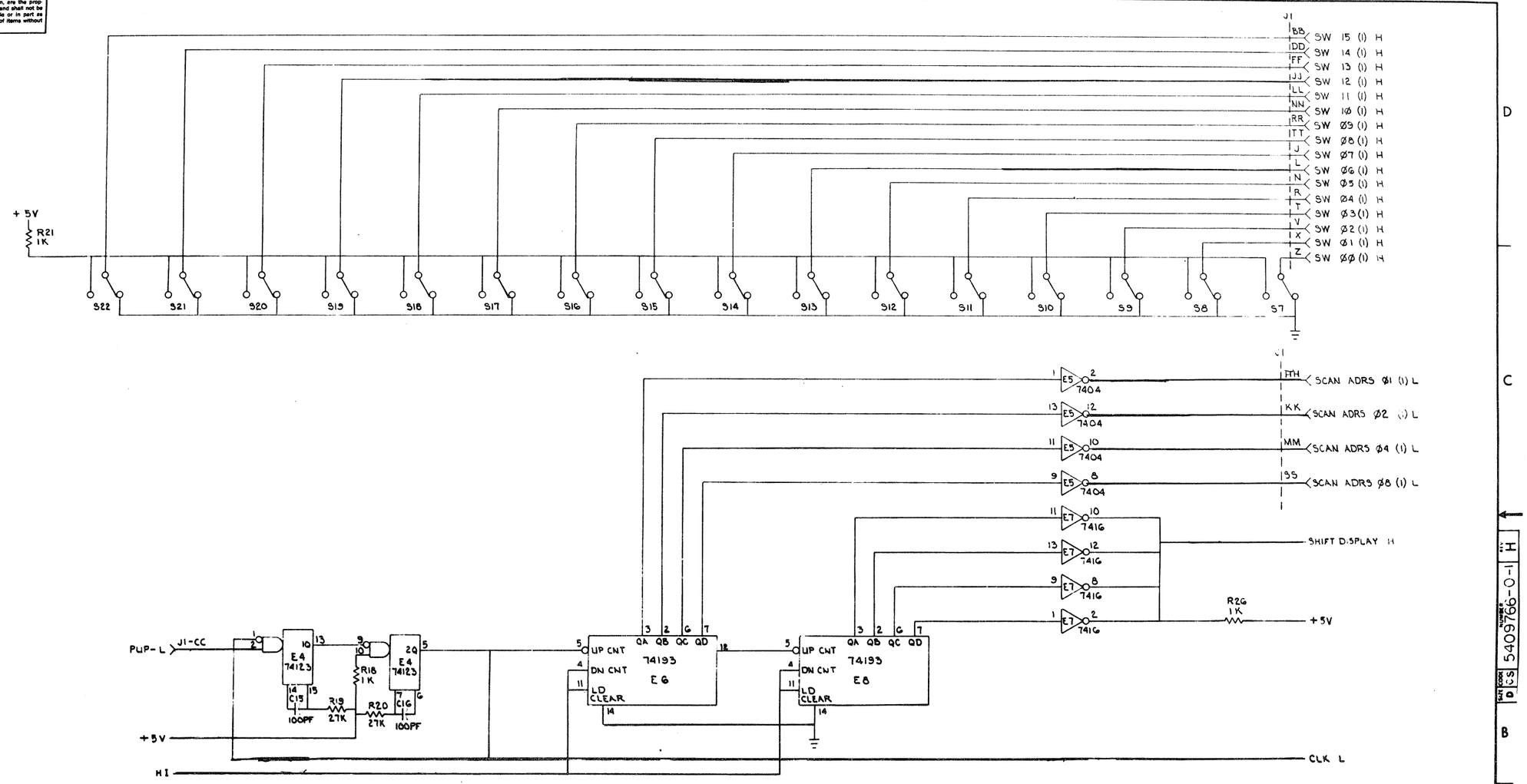

QTY	REF DESIGNATION	DESCRIPTION	PART NO.	ITEM NO.

PARTS LIST

ETCH BOARD REV E

CHG.	CHANGE NO.	REV.	REVISIONS

DEC NO.	EIA NO.	DEC NO.	EIA NO.

SEMICONDUCTOR CONVERSION CHART

DRN Robert J. Doucette DATE 20 Jan 72
CHECK Rodney DATE 20 Jan 72
DSIGN DATE 1-Mar-72
PROJ. ENG DATE 2-Mar-72
PROGR. DATE Feb-72
NEXT HIGHER ASSY
B-EA-5409766-0-0
SCALE
SHEET 3 OF 3

digital EQUIPMENT CORPORATION
maynard, massachusetts 01754

TITLE 11/05 CONSOLE

SIZE D CODE CS NUMBER 5409766-0-1 REV. H

SIZE D CODE CS NUMBER 5409766-0-1 REV. H

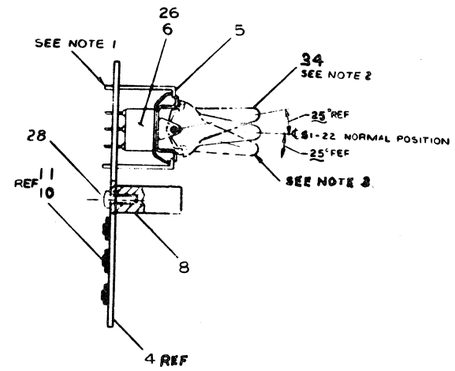

VIEW A-A

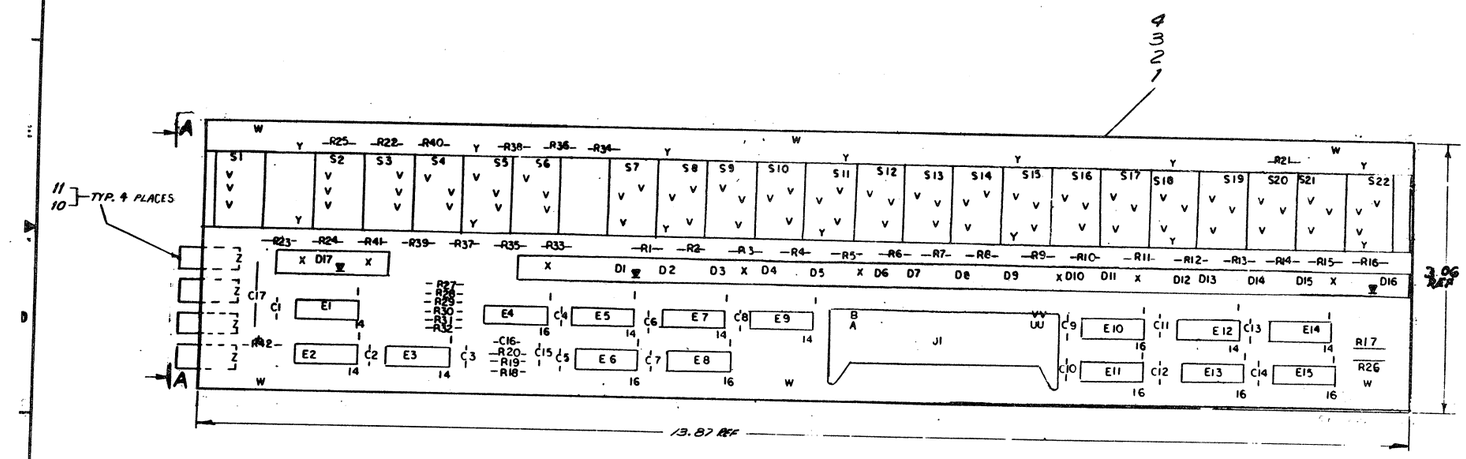

NOTES:

1. ATTACH SWITCH BRACKET (ITEM # 5) TO ETCH BOARD (ITEM # 4) BY TURNING TABS 1/4 TURN ON SWITCH BRACKET USING TWISTING TOOL # B-MO-7606203 (14 PLACES)
2. ASSEMBLE S2, 3, 4, 5 & 6 AS SHOWN.
3. ASSEMBLE S1 & S7 THRU S22 AS SHOWN.

QTY	REF DESIGNATION	DESCRIPTION	PART NO.	ITEM NO.
				36
☒				35
22		KNOB	D-PS-1210786-0-0	34
				33
				32
☒				31
				30
				29
8		POZI-DRIVE TYPE F 4-40-5/16	9009236	28
☒				27
5	S1, S2, S4, S5, S6	SWITCHES, MOMENTARY	1210841	26
1	E3	I.C. DEC 7417	1909929	25
1	E4	I.C. DEC 74123	1910436	24
2	E6, E8	I.C. DEC 74193	1910018	23
6	E9, E12, E14, E7, E1, E2	I.C. DEC 7416	1909928	22
1	E5,	I.C. DEC 7404	1909686	21
4	E10, E11, E13, E15	I.C. DEC 8271	1909615	20
2	R19-R20	RES. 27K 1/4W 5%	1305346	19
17	R1-R16 R29	RES. 180 OHM 5%	1301322	18
17	R17-18, 21-23, 25, 26, 33-42	RES. 1K 1/4W 5%	1300365	17
6	R27-R32	RES. 47 1/4W 5%	1300202	16
14	C1-C14	CAP. .01 MF 100V 20%	1001610	15
1	C17	CAP 6.8 MF 35V 20%	1000067	14
2	C15, C16	CAP. 100 PF 100V 5%	1000016	13
17	D1-D17	DIODE, LIGHT EMITTING (B.E.)	1110864	12
4		EYELET # GS4-4 STIMPSON	9007837	11
4		FASTON TAB	9007112	10
3		LED HOLDER (B.E.)	1210795-2	9
1		SINGLE L.E.D. HOLDER (B.E.)	1210848-2	8
1	J1	CONNECTOR	1209941	7
17	S7-S22, S3	SWITCHES TOGGLE	1210840	6
1		SUPPORT, SWITCHES	D-MD-7409270-2-0	5
1		ETCH CIRCUIT BOARD	E-IA-5009765-0-0	4
REF		MODULE ECO HISTORY	B-4H-5409766-0-6	3
REF		CIRCUIT SCHEMATIC	D-CS-5409766-0-1	2
REF		X-Y COORDINATE HOLE LOCATION	K-CO-5409766-0-4	1

PARTS LIST

ETCH BOARD REV E

IC TYPE	GND	+5V
DEC 74123	8	16
DEC 74193	8	16
DEC 8271	8	16

GND AND 5V ARE USUALLY PIN 7 AND 14 RESPECTIVELY EXCEPTIONS ARE STATED ABOVE

IC PIN LOCATIONS

ITEM NO.	AWG	FROM PT	TO PT

JUMPER LIST

REV	CHANGE NO.			
A	ORIGINATED			
B	5409766-00001	B J Haile 3-2-72	R. KRISHNA	
C	5409766-00002+2A	B J Haile 4-5-72	R. KRISHNA	
D	5409766-00003	B J Haile 6-28-72	R. KRISHNA	
E	5409766-00004	B J Haile 10-25-72	G. GRAHAM	7-5-72
F	5409766-00005	B J Haile 4-23-73	B. ARMSTRONG	1-6-72
H	5409766-00006	R D. Hale 8/21/73	G. GRAHAM	5-1-73 4-4-74

REVISIONS

DEC NO.	EIA NO.	DEC NO.	EIA NO.

SEMICONDUCTOR CONVERSION CHART

DRN DATE 12-15-71
CHK'D C. Teschner DATE 2-10-72
ENG R Krishna DATE 2-10-72
PROJ. ENG. R Krishna DATE 2-10-72
PROD. R K. Peltan DATE 2-10-72
NEXT HIGHER ASSY D UA-KY11-0-0
SCALE 2/1
SHEET 1 OF 1

digital EQUIPMENT CORPORATION MAYNARD MASSACHUSETTS

TITLE
ETCH BOARD ASSY.
(11Ø5 CONSOLE)

SIZE E CODE IA NUMBER 5409766-0-0 REV. H
DIST

digital EQUIPMENT CORPORATION

DRAWING DIRECTORY

CUSTOMER PRINT SET INDEX

THIS IS PRINT SET

SEQUENCE		SEQUENCE
DRAWING DIRECTORY	B-DD-H75Ø-Ø	
UNIT ASSEMBLY	E-UA-H75Ø-Ø-Ø	
CIRCUIT SCHEMATIC	D-CS-H75Ø-Ø-1	
DIODE BOARD, P.S. CIRCUIT SCHEMATIC	B-CS-5409498-YA-1	
REGULATOR BOARD	E-IA-5409728-Ø-Ø	
CIRCUIT SCHEMATIC	D-CS-5409728-Ø-1	
5V REGULATOR BOARD	E-UA-H744-Ø-Ø	
5V REGULATOR	D-CS-H744-Ø-1	
H75Ø POWER SUPPLY HARNESS	E-IA-7009207-Ø-Ø	

UNIT VARIATIONS

VAR	TITLE	PRINT SET H75Ø-Ø
H75Ø-Ø	H75Ø POWER SUPPLY	X

REVISIONS

REV	CHG. NO.	DATE
A	H750-00001	3-73
B	H750-2	5-73
C	H750-3	6-73
D	H750-4	7-73
E	H750-5	8-73
F	H750-6	11-73
H	H750-7	11-73
J	H750-8	2 74

USED ON OPTION/MODEL	
11/35	

SHEET 1 OF 3

DRN.		DATE 1-15-72
CHK'D.		DATE 1-16-72
PROJ ENG.	R. J. Wolf	DATE 2/12/73
PROD.		DATE 2-21-73
FIELD SERV.		DATE 2/13/73

TITLE POWER SUPPLY H75Ø

SIZE	CODE	NUMBER	REV
B	DD	H75Ø-Ø	J

DIST

DRB 106

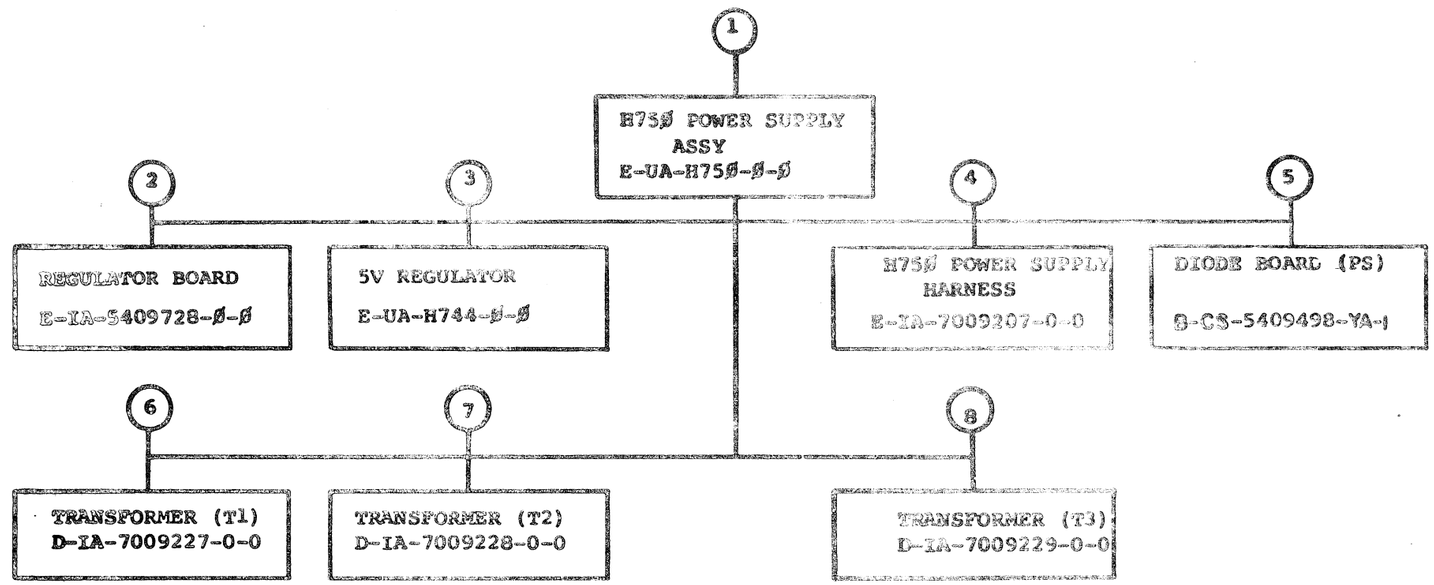

TITLE		SIZE	CODE	NUMBER	REV
POWER SUPPLY H75Ø	SHEET 3 OF 3	P		H75Ø-Ø	J

DRD 107

ELECTRICAL

CUSTOMER PRINT SET H75Ø-Ø				MFG. SET	FIND NO.	DRAWING NO.	REV	NO OF SHT	DESCRIPTION	OPTION NO./FILE DATE
X				X	1	E-UA-H75Ø-Ø-Ø		2	H75Ø POWER SUPPLY ASSY	
X				X		D-CS-H75Ø-Ø-1	B	1	CIRCUIT SCHEMATIC (H75Ø PS.)	
				X		A-SP-H75Ø-Ø-3	A	1	TEST PROCEDURE	
						1211222		1	RELAY	
X				X	2	E-IA-5409728-0-0		1	REGULATOR BOARD	
X				X		D-CS-5409728-0-1		1	CIRCUIT SCHEMATIC	
						K-CO-5409728-0-4		1	X-Y COORDINATE HOLE LOC.	
						B-MH-5409728-0-6		1	MODULE ECO HISTORY	
						5009727		1	ETCH BOARD	
X				X	3	E-UA-H744-Ø-Ø		1	5V REGULATOR	
X				X		D-CS-H744-Ø-1		1	CIRCUIT SCHEMATIC	
						B-MH-H744-Ø-4		1	X-Y COORDINATE HOLE LOCATION	
						K-CO-H744-Ø-5		1	ASSY/DRILLING HOLE LOCATION	
						D-AH-H744-Ø-6		1	MODULE ECO HISTORY	
						5009725		1	ETCH BOARD	
X				X	4	E-IA-7009207-0-0		1	H75Ø POWER SUPPLY HARNESS	
X				X	5	B-CS-5409498-YA-1		1	DIODE BOARD PS.CIRCUIT SCHEMATIC	
						K-CO-5409498-0-4		1	X-Y COORDINATE HOLE LOC.	
						B-MH-5409498-0-6		1	MODULE ECO HISTORY	
						E-IA-5009497-0-0		1	ETCH CIRCUIT BOARD	
				X	6	D-IA-7009227-0-0	#	1	TRANSFORMER REWORK (T1)	
						1611224		1	TRANSFORMER	
				X	7	D-IA-7009228-0-0		1	TRANSFORMER REWORK (T2)	
						1611225		1	TRANSFORMER	
				X	8	D-IA-7009229-0-0	#	1	TRANSFORMER REWORK (T3)	
						1610150		1	TRANSFORMER	

MECHANICAL

CUSTOMER PRINT SET H75Ø-Ø				MFG SET	FIND NO.	DRAWING NO.	REV	NO OF SHT	DESCRIPTION	OPTION NO./FILE DATE
						E-UA-H75Ø-Ø-Ø	H	2	H75Ø POWER SUPPLY ASSY	
				X		E-IA-7409723-0-0	#	2	CHASSIS POWER SUPPLY	
						1209403		1	FAN SUPER BOXER	
				X		C-MD-7409722-0-0	#	1	COVER, POWER SUPPLY	
						A-DC-7411006-0-0		1	DECAL	
					2	E-IA-5409728-0-0	#	1	REGULATOR BOARD	
						D-CS-5409728-0-1	#	1	CIRCUIT SCHEMATIC	
						C-IA-5310126-0-0		1	HOLDER CAPACITOR	
						C-MD-5309779-0-0		1	CONTACT,COMMON CAPACITOR	
						C-MD-5309781-0-0		1	CONTACT, CAPACITOR	
					3	E-UA-H744-Ø-Ø	#	1	5V REGULATOR	
						D-CS-H744-Ø-1	#	1	CIRCUIT SCHEMATIC	
					4	E-IA-7009207-0-0	#	1	H75Ø POWER SUPPLY HARNESS	
					5	B CS-5409498-YA-1	#	1	DIODE BOARD P.S.CIRCUIT SCHEMATIC	
					6	D-IA-7009227-0-0	#	1	TRANSFORMER REWORK (T1)	
						1611224		1	TRANSFORMER	
					7	D-IA-7009228-0-0	#	1	TRANSFORMER REWORK (T2)	
						1611225		1	TRANSFORMER	
					8	D-IA-7009229-0-0	#	1	TRANSFORMER REWORK (T3)	
						1610150		1	TRANSFORMER	

CUSTOMER PRINT SET CODES	
X = PRINT OF DOCUMENT INCLUDED IN PRINT SET	
C = INCLUDES ALL PRINTS INDICATED ON DOCUMENT	
S = CONFIDENTIAL AUTHORIZED SIGNATURE REQUIRED	

TITLE	SHEET	SIZE	CODE	NUMBER	REV
POWER SUPPLY H75Ø	3 OF 3	B	DD	H75Ø-Ø	J

DPB 108

DEC 14-13254-1062-20-0072

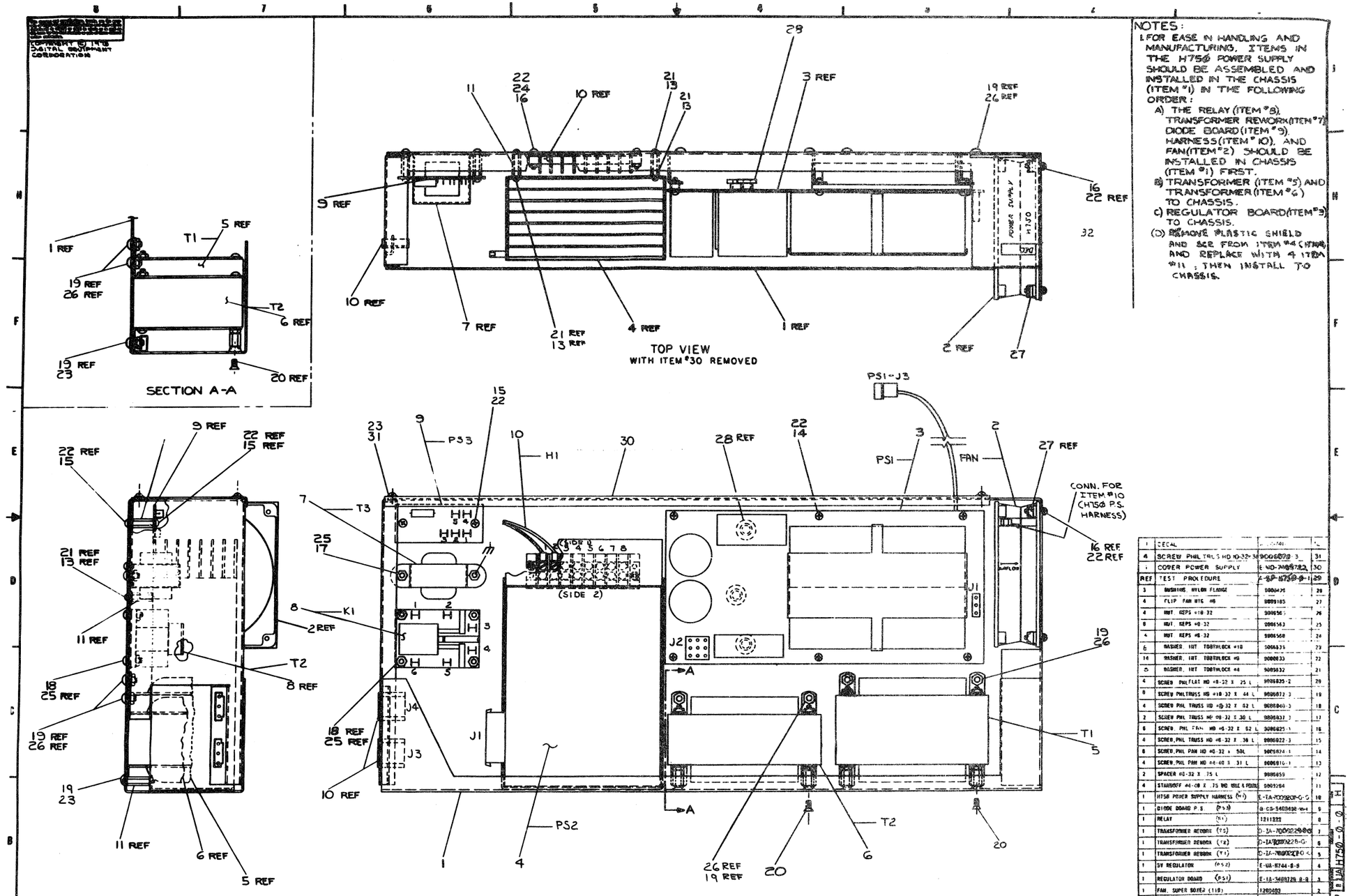

NOTES:

1. FOR EASE IN HANDLING AND MANUFACTURING, ITEMS IN THE H750 POWER SUPPLY SHOULD BE ASSEMBLED AND INSTALLED IN THE CHASSIS (ITEM #1) IN THE FOLLOWING ORDER:
   - A) THE RELAY (ITEM #8), TRANSFORMER REWORK (ITEM #7), DIODE BOARD (ITEM #9), HARNESS (ITEM #10), AND FAN (ITEM #2) SHOULD BE INSTALLED IN CHASSIS (ITEM #1) FIRST.
   - B) TRANSFORMER (ITEM #5) AND TRANSFORMER (ITEM #6) TO CHASSIS.
   - C) REGULATOR BOARD (ITEM #3) TO CHASSIS.
   - (D) REMOVE PLASTIC SHIELD AND SCR FROM ITEM #4 (H700) AND REPLACE WITH 4 ITEM #11; THEN INSTALL TO CHASSIS.

QTY.	DESCRIPTION	PART NO.	ITEM NO.
1	DECAL	[illegible]	[illegible]
4	SCREW PHIL TRUSS HD 10-32 X 3/8	9000[illegible] 3	31
1	COVER POWER SUPPLY	E-NO-7000722	30
REF	TEST PROCEDURE	E-SP-H750-0-1	29
3	BUSHING NYLON FLANGE	9000426	28
4	FLIP FAN NTC #8	9009185	27
4	NUT REPS #10-32	9006561	26
8	NUT REPS #8-32	9006563	25
4	NUT REPS #6-32	9006560	24
6	WASHER INT TOOTHLOCK #10	9006635	23
14	WASHER INT TOOTHLOCK #8	9006633	22
5	WASHER INT TOOTHLOCK #4	9006632	21
4	SCREW PHIL FLAT HD #8-32 X .25 L	9006835-2	20
8	SCREW PHIL TRUSS HD #10-32 X .44 L	9006872-3	19
4	SCREW PHIL TRUSS HD #8-32 X .62 L	9006840-3	18
2	SCREW PHIL TRUSS HD #8-32 X .30 L	9006837-3	17
8	SCREW PHIL FLAT HD #6-32 X .62 L	9006825-1	16
4	SCREW PHIL TRUSS HD #6-32 X .38 L	9006822-3	15
8	SCREW PHIL PAN HD #6-32 X .50L	9006824-1	14
4	SCREW PHIL PAN HD #4-40 X .31 L	9006816-1	13
2	SPACER #8-32 X .75 L	9006659	12
4	STANDOFF #4-40 X .75 HEX MALE & FEMALE	9009184	11
1	H750 POWER SUPPLY HARNESS (W1)	E-IA-7009820-0-0	10
1	DIODE BOARD P.S. (PS3)	B-CS-5400498-0-1	9
1	RELAY (K1)	1211222	8
1	TRANSFORMER REWORK (T2)	D-IA-7000229-0-0	7
1	TRANSFORMER REWORK (T2)	D-IA-7000228-0-0	6
1	TRANSFORMER REWORK (T1)	D-IA-7000227-0-0	5
1	5V REGULATOR (PS2)	E-UA-8744-8-8	4
1	REGULATOR BOARD (PS1)	E-IA-7400128-8-8	3
1	FAN, SUPER BOREX (110)	1200403	2
1	CHASSIS POWER SUPPLY	E-IA-7400123-8-0	1

PARTS LIST

PART USED ON OPTIONS	
H750	

UNLESS OTHERWISE SPECIFIED DIMENSIONS IN INCHES
TOLERANCES
DECIMALS .XXX ± .005 .XX ± .02 .X ± .1
ANGLES ±0° 30'
REMOVE BURRS AND BREAK SHARP CORNERS SURFACE QUALITY ✓
MATERIAL SEE PARTS LIST
FINISH

REV	ZONE	CHANGE NO.	DATE	BY
A		H750-00001	2-14-72	C. BLASI
B		H750-00003	2-23-72	C. BLASI
C		H750-00004	2-28-72	C. BLASI
D		H750-00005	3-6-72	
E		H750-00006	3-13-72	R. WOLF
F		H750-00007	3-13-72	R. WOLF
G		H750-00008	3-13-72	R. WOLF
H		H750-00009	4-5-74	R. WOLF

DRAWN	C. BLASI	2-14-72
CHECKED		
ENGINEERING		
MANUFACTURING		
QUALITY ASSURANCE		
NEXT HIGHER ASSY	D-UA-1135-0-0	
SCALE	NONE	
SHEET	1 OF 2	

EQUIPMENT CORPORATION

TITLE
H750
POWER SUPPLY
ASSY

SIZE	NUMBER	REV.
B	UA H750 - 0 - 0	H

WIRE TABLE

DWG NO.	DESCRIPTION AWG	COLOR	FROM CONNECTION	TO CONNECTION	REMARKS
			H1-P1		
	—	—	H1-J1	PS1-J3	
	—	—	H1-J2		
	—	—	H1-J3	TO CHASSIS	
	—	—	H1-J4	ITEM #1	
	18	RED	H1-J5	TO FAN	
		WHT	H1-J6	ITEM # 2	
10 (H1)		WHT	H1-7	K1-6	
		RED	H1-8	K1-3	
		WHT	H1-9	K1-4	
		ORN	H1-10	K1-5	
		VIO	H1-11	K1-2	
		RED	H1-12	K1-1	
		RED	H1-13	K1-1	
		VIO	H1-14	PS3-2	
		ORN	H1-15	PS3-3	
	14	BLK	H1-16	PS3-5	
	18	BLK	H1-17	PS3-2	
	14	BLK	H1-49	PS3-5	
	14	BLK	H1-50	T3 m	
	—	—	T1-J1	PS1-J1	
5 (T1)	14	BLK	T1-1	H1-TB1-5	ALL CONN-
		RED	T1-2	H1-TB1-6	ECTIONS TO
		RED/WHT	T1-3	H1-TB1-7	H1-TB1 ARE
	14	BLK/WHT	T1-4	H1-TB1-8	ON SIDE #2.
	—	—	T2-P1		
6 (T2)	—	—			
	14	BLK	T2-7	H1-TB1-5	ALL CONN
		RED	T2-8	H1-TB1-6	ECTIONS TO
		RED/YEL	T2-9	H1-TB1-7	H1-TB1 ARE
	14	WHT	T2-10	H1-TB1-8	ON SIDE #2
	20	BRN	T3-1	H1-TB1-2	SIDE #1
7 (T3)		RED	T3-2	H1-TB1-5	SIDE #1
		ORN	T3-3	H1-TB1-7	SIDE #1
		YEL	T3-4	K1-6	
		GRN	T3-5	PS3-4	
		GRN	T3-6	PS3-1	
	20	BLU	T3-7	H1-TB1-1	SIDE #2

FIRST USED ON OPTION/MODEL: H750	QTY.	DESCRIPTION	PART NO / ITEM NO.
UNLESS OTHERWISE SPECIFIED DIMENSION IN INCHES. TOLERANCES: DECIMALS .XXX ± .005, .XX ± .02, .X ± .1; ANGLES ±0° 30'		PARTS LIST	
REMOVE BURRS AND BREAK SHARP CORNERS. SURFACE QUALITY ✓			
MATERIAL: SEE PARTS LIST	NEXT HIGHER ASSY.: D-UA-1135-0-0		
FINISH: —	SCALE: NONE; SHEET 2 OF 2		

DIGITAL EQUIPMENT CORPORATION
MAYNARD, MASSACHUSETTS

TITLE: H750 POWER SUPPLY ASSY.

SIZE E | CODE UA | NUMBER H750-0-0 | REV. H

DIST.

CHANGE NO. | DATE | DRN. | CHK.

DEC FORM NO. 2142 1400

NOTES:

1. HI INDICATES CONNECTORS IN POWER SUPPLY HARNESS. (E-IA-7009207-0-0)
2. DOTTED LINES INDICATE CONNECTIONS VIA 7009208 HARNESS (NOT PART OF H750)

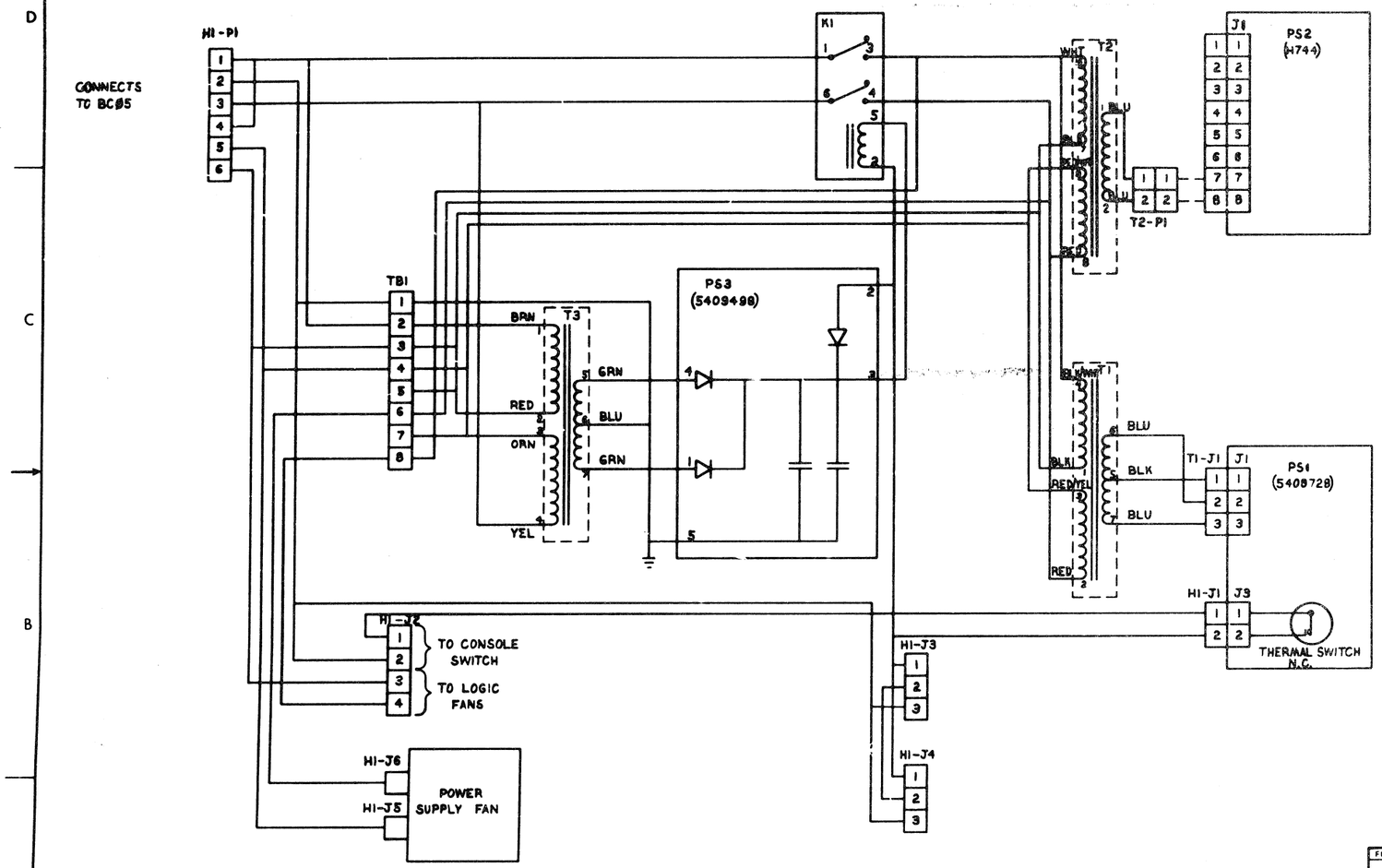

FIRST USED ON OPTION/MODEL	QTY	DESCRIPTION	PART NO.	ITEM NO.
PDP 11/35		PARTS LIST		

UNLESS OTHERWISE SPECIFIED DIMENSION IN INCHES
TOLERANCES
DECIMALS .xxx .005 .xx .02 .x .1
ANGLES ±0 30
REMOVE BURRS AND BREAK SHARP CORNERS SURFACE QUALITY

		DATE
DRN.	K. DAVIS	1-17-73
CHK'D.	J. CAHILL	2-13-73
ENG.	C. BLASI	DATE
PROJ. ENG.	R. WOLF	DATE 2-13-73
PROD.	G. STRINGER	DATE 2-21-73

digital EQUIPMENT CORPORATION

TITLE H750 POWER SUPPLY

MATERIAL —/—
FINISH —/—
NEXT HIGHER ASSY.
SCALE —/—
SHEET 1 OF 1
SIZE D CODE CS NUMBER H750-0-1 REV. B
DIST

B	H750-00008		
A	REVISED AND REDRAWN	G.W.L. 11-8-72	R. WOLF 11-13-72

SIZE B | CODE CS | NUMBER 5409498-0-1 | REV. B

NOTES:
1 ADD C2 FOR VARIATION YA

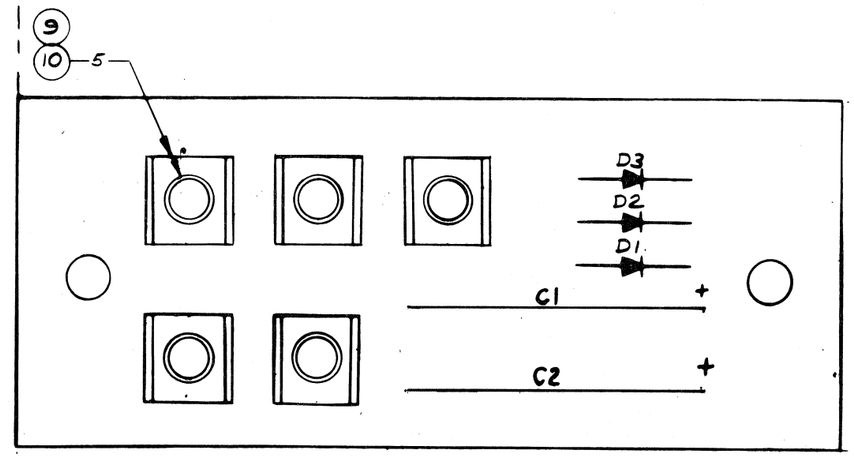

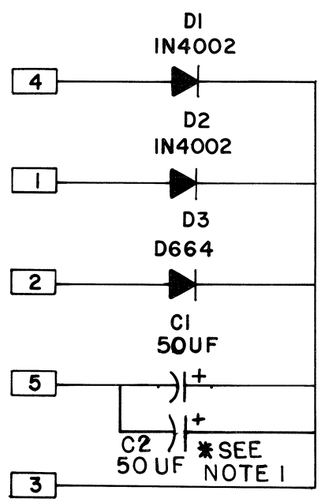

☐ = FASTON TABS

5409498-0-1	5409498-YA-1	QTY.	REF DESIGNATION	DESCRIPTION	DEC PART NO.	ITEM NO.
				PARTS LIST		
5	5			EYELETS	9007837	10
5	5			FASTON TABS #41290	9007113	9
1	1		D3	DIODE D664	1100114	8
2	2		D1, D2	DIODE 1N4002	1104861	7
1	2		C1,C2	CAP. 50UF 50V $^{-10}_{+75}$%	1000080	6
1	1			ETCHED CIRCUIT BOARD	5009497	5
				MODULE ECO HISTORY	B-MH-5409498-0-6	4
				ASSY/DRILLING HOLE LAYOUT	D-AH-5409498-0-5	3
				X-Y COORDINATE HOLE LOCATION	K-CO-5409498-0-4	2

TRANSISTOR & DIODE CONVERSION CHART

DEC	EIA	DEC	EIA
IN4002	SAME		
D664	IN3606		

REVISIONS	REV.	CHG NO.	CHK

R.D. Wolf 12-3-73	DRN. B.J. Haile	DATE 4/21/71	
R. WOLF	CHK'D D.B. Harrison	DATE 9-23-71	
R.D. Hale 4-27-73 B 00002	ENG. R. Lewis	DATE 5-13-71	
R.B. Cram	PROD.	DATE	
R. LEWIS			
R.D. Hale 4-4-73 A 00001			

digital EQUIPMENT CORPORATION
MAYNARD, MASSACHUSETTS

TITLE POWER SUPPLY DIODE BOARD

SIZE	CODE	NUMBER	REV.
B	CS	5409498-0-1	B

PRINTED CIRCUIT REV. B

DEC FORM NO. DRB 102

DIST. 32, 41, 434, 435 2

4

pmk

NOTES:

1. APPLY ITEM #8 (THERMAL COMPOUND) BETWEEN TRANSISTOR AND HEAT SINK FOR Q1, Q6, Q7, Q22, Q23, D5, D8, D9 & S1.
2. TRIM LEADS ON ITEM #16 (THERMOSTAT) TO 1/2" LENGTH AND ATTACH ITEM #84 (PINS) w. 2 ITEM #87 (HOUSING), AS SHOWN.
3. APPLY FLAT WASHER ITEM #72 BETWEEN SCR. HD. AND ETCHED BOARD WHEN MOUNTING COMPONENTS Q6, Q7, Q23 & D10.

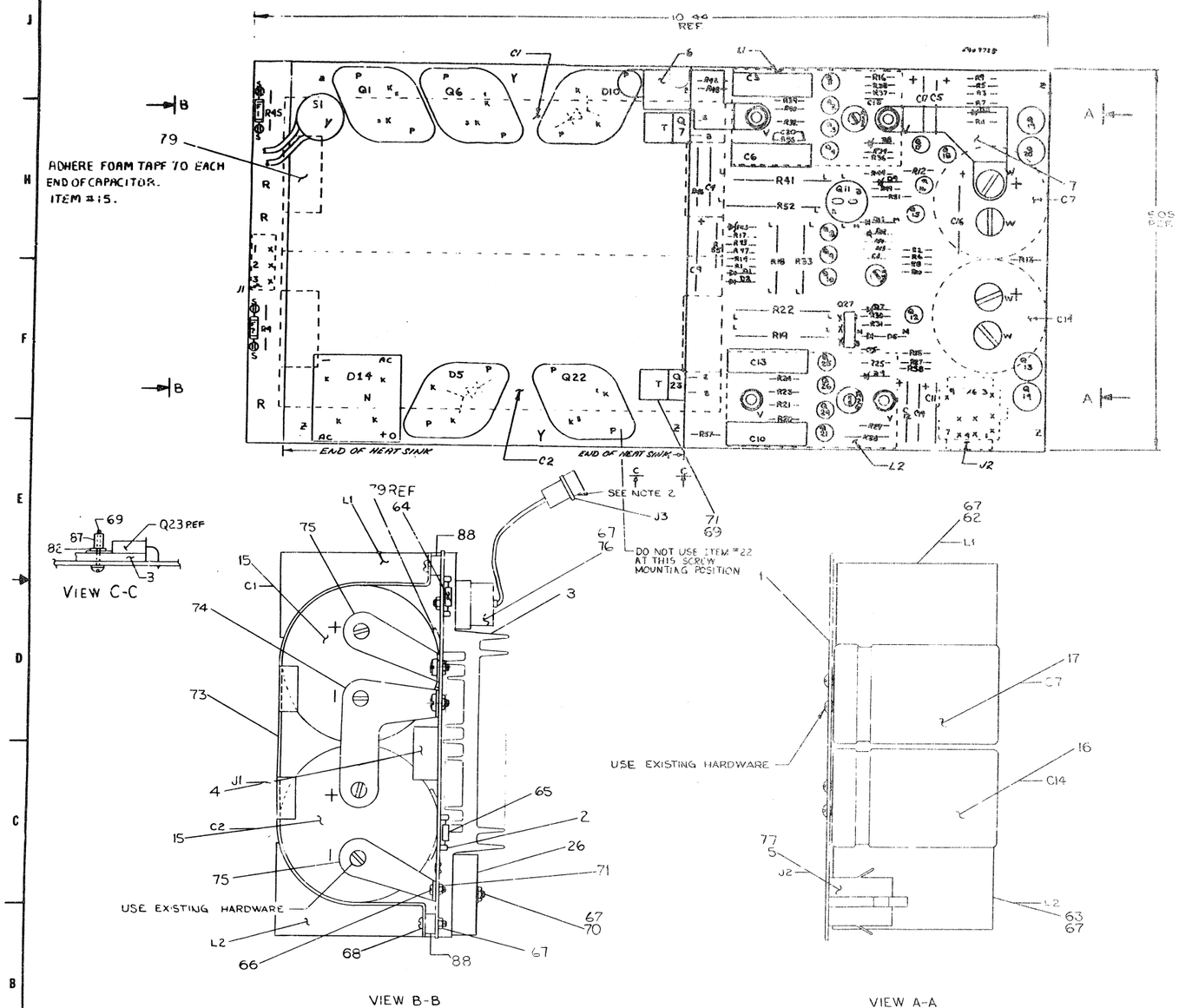

QTY	REF DESIGNATION	DESCRIPTION	PART NO.	ITEM NO.
		5409728 INTERPLANT/CUSTOMER PRG	A-PI 3700045-0-0	93
		MANUFACTURING SPECIFICATION	A-SP-5409728-0-B	92
		ASSEMBLY PROCEDURE	A-SP-5409728-0-B	91
		INSPECTION PROCEDURE	A-SP-5409728-0-B	90
		MANUFACTURING TEST PROCEDURE	A-SP-5409728-0-B	89

QTY.	REF DESIGNATION	DESCRIPTION	ITEM NO.
4		SPLIT LUG	
1		ETCHED BOARD	
		MODULE, ECO HISTORY	
		X-RY COMPONENTS	
		CIRCUIT SCHEMATIC	

IC TYPE	GND	+5V
GND AND 5V ARE USUALLY PIN 7 AND 14 RESPECTIVELY EXCEPTIONS ARE STATED ABOVE		

IC PIN LOCATIONS

ITEM NO	AWG	FROM PT	TO PT

JUMPER LIST

FIRST USED ON SPT/MODEL 11/05

ETCH BOARD REV. E

DEC NO. | ECN NO. | NO. | ECN NO.

SEMICONDUCTOR CONVERSION CHART

PARTS LIST

REGULATOR BOARD

TEST BOARD ASSY 0-4D7008731-0-0

SIZE C | 5409728-0-0

SCALE 2/1

SHEET 6 OF 6

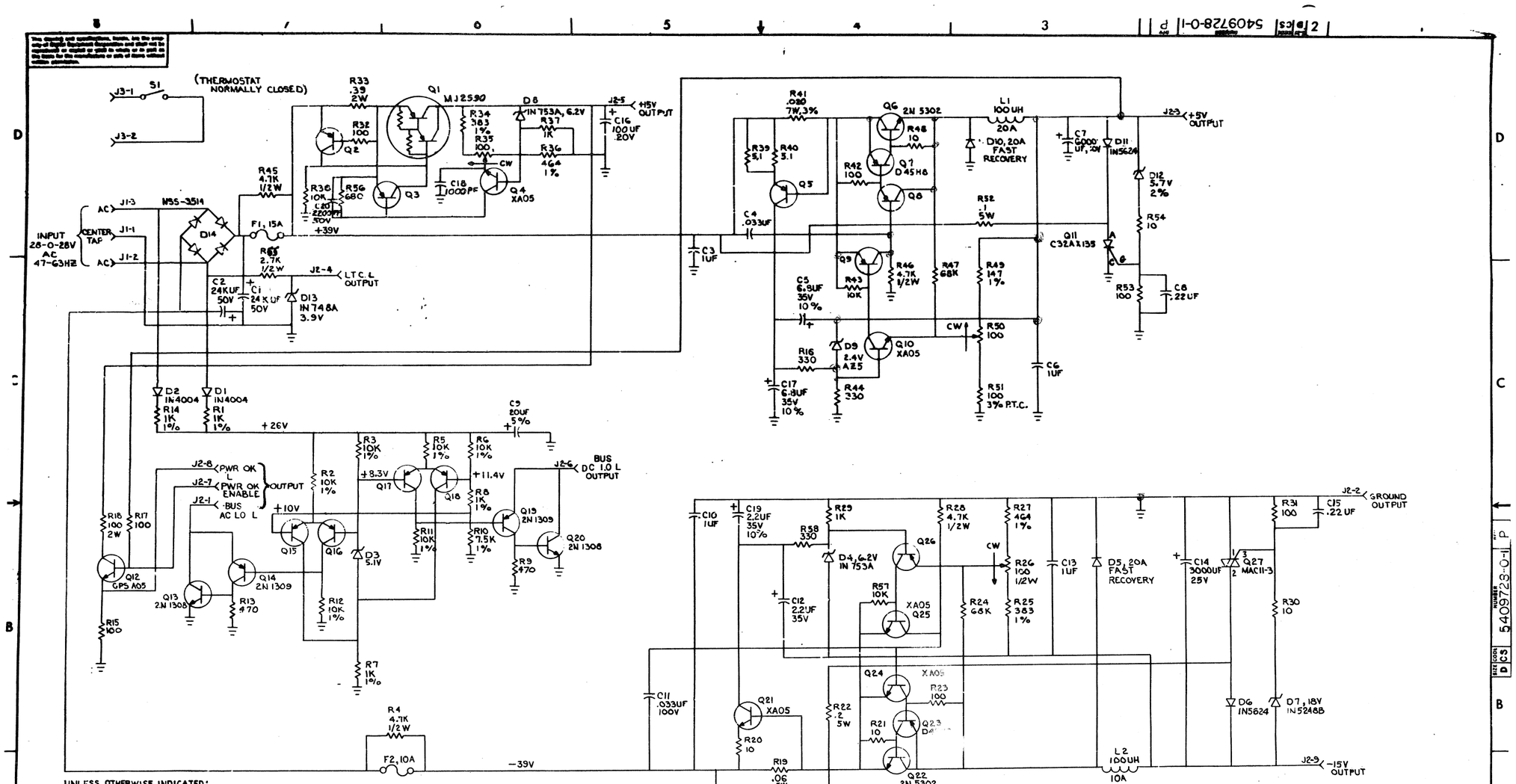

UNLESS OTHERWISE INDICATED:
1% RESISTORS ARE 1/8W
VOLTAGES ARE TAKEN AT NO LOAD WITH 115 VAC LINE
VOLTAGES ARE ± 10% TAKEN BY A ≥ 10KΩ/V METER
TRANSISTORS = XA55

QTY	REF DESIGNATION	DESCRIPTION	PART NO.	ITEM NO.

PARTS LIST

ETCH BOARD REV E

DEC NO.	EIA NO.	DEC NO.	EIA NO.

SEMICONDUCTOR CONVERSION CHART

CHK	CHANGE NO.	REV
R.J. Wolf	5409728-00011	H
R. Wolff	5409728-00009	G
R. Burton	5409728-00008	F
R. Burton	5409728-00007	E
R. Burton	5409728-00006	D
J.W. Lawrence	5409728-00005	C
R. Burton	5409728-00004	B
R. Wolff	5409728-00003	A

REVISIONS

DRN. Roger J. Doucette DATE 12-20-71
CHK'D. Maxwell Moore DATE 12-21-71
ENG. R. Wolff DATE 12-28-71
PROJ. ENG. R. Wolff DATE 12-29-71
PROD. R.R. Patterson DATE 12/29/71
NEXT HIGHER ASSY
SCALE
SHEET 1 OF 1

digital EQUIPMENT CORPORATION MAYNARD, MASSACHUSETTS

TITLE REGULATOR BOARD FOR H740

SIZE D CODE CS NUMBER 5409728-0-1 REV. P
DIST.

5409728-0-1 P

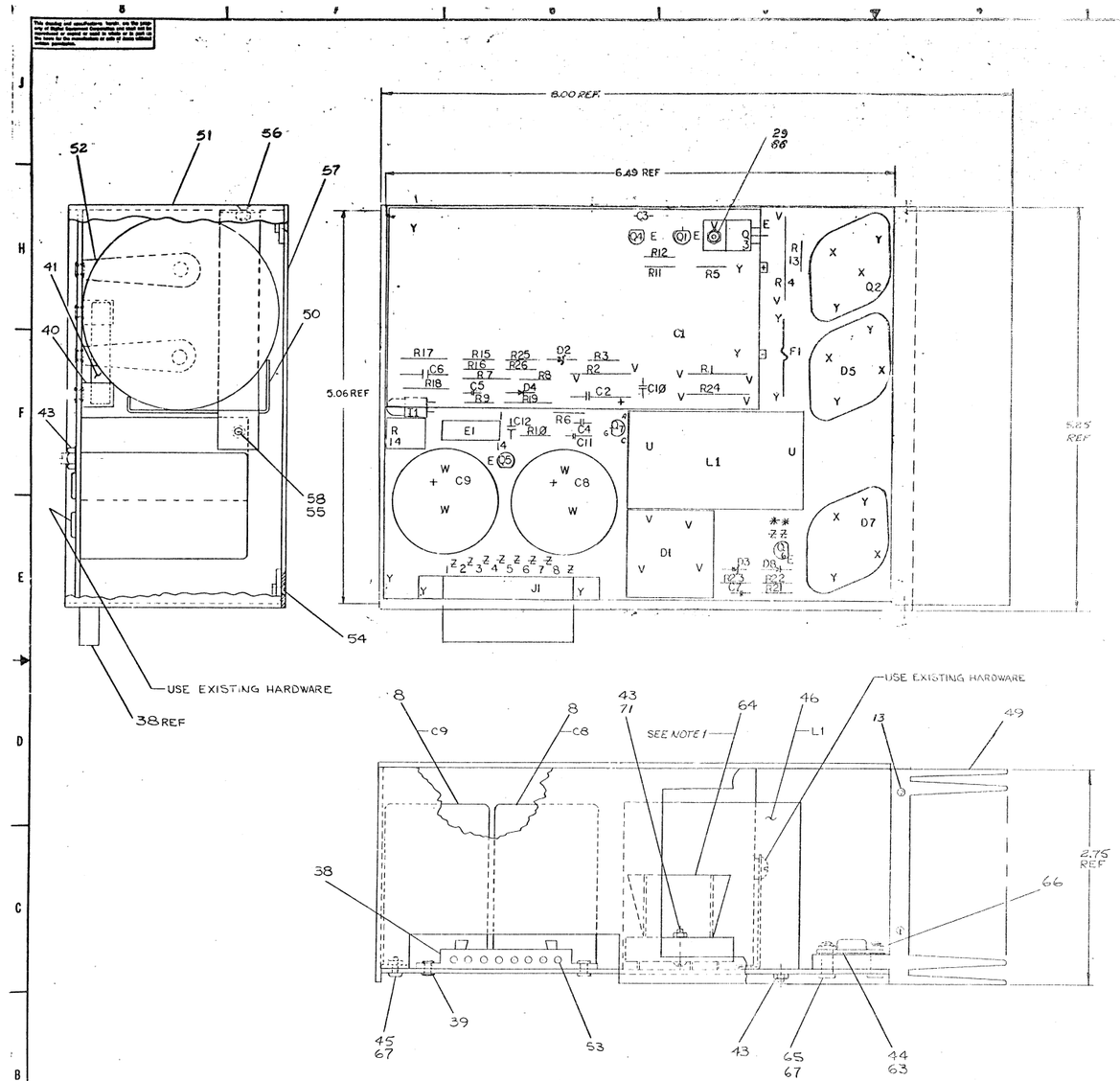

NOTES:

1. APPLY ITEM #63 (COMPOUND) BETWEEN TRANSISTOR (Q1), DIODE (D5, D7) AND ITEM #56 (ADHER) ALSO BETWEEN ITEM #7 (WASHER) AND HEAT SINK (Q2). ALSO APPLY ITEM #63 (COMPOUND) BETWEEN TO (DIODE BRIDGE) AND ITEM #8 (HEAT SINK BRIDGE).

1	TL	4 VOLT LAMP	[illegible]
8		LOCK WASHER #4	[illegible]
7		[illegible]	[illegible]
6		[illegible]	[illegible]
1		[illegible]	[illegible]
AR		COMPOUND [illegible]	[illegible]
1	R25	RESISTOR [illegible]	[illegible]
1	R19	RESISTOR [illegible]	[illegible]
1	R3	RESISTOR [illegible]	[illegible]
1	Q7	TRANSISTOR [illegible]	[illegible]
1		[illegible]	[illegible]
1		COVER	[illegible]
1		SCR, PHL FLT [illegible]	[illegible]
1		WASHER, LOCK #6	[illegible]
4		SCR, PHL FLT [illegible]	[illegible]
1		CONTACT [illegible]	[illegible]
2		STRAP, CAPACITOR	[illegible]
1		BRACKET, REGULATOR	[illegible]
1		HOLDER, CAPACITOR [illegible]	[illegible]
1		HEAT SINK REGULATOR	[illegible]
2	C5, C12	CAP 33 PF	[illegible]
1	R24	RESISTOR 10 [illegible]	[illegible]
1	L1	[illegible]	[illegible]
2		SCR, PHL PAN HD #6-32 [illegible]	[illegible]
3		WASHER, INSULATOR	[illegible]
3		NUT, KEPS #6-32	[illegible]
1	F1	FUSE 15 AMP	[illegible]
2		FUSE CLIP	[illegible]
6		EYELET [illegible]	[illegible]
1	U1	METAL-LOCKING [illegible]	[illegible]
1	E1	INTEGRATED CIRCUIT [illegible]	[illegible]
1	Q5	TRANSISTOR [illegible]	[illegible]
1	Q3	TRANSISTOR [illegible]	[illegible]
3	Q1, Q6, Q4	TRANSISTOR [illegible]	[illegible]
1	Q2	TRANSISTOR [illegible]	[illegible]
1	R14	RES VARIABLE 200	[illegible]
1	R21	RES [illegible]	[illegible]
1	R23	RES 100 1/4W 5%	[illegible]
1		SCR, PAN [illegible]	[illegible]
1	R11	RES 27 1/4W 10%	[illegible]
1	R17	RES 250 1/8W, 1%	[illegible]
1	R9	RES 27 1/4W 5%	[illegible]
1	R7	RES 18.2K 1/8W 1%	[illegible]
2	R8, R16	RES 1K 1/4W 5%	[illegible]
1	R18	RES 511 1/8W 1%	[illegible]
1	R25	RES 18K 1/4W 5%	[illegible]
2	R6, R15	RES 10K 1/4W 5%	[illegible]
1	R4	RES .02 5W [illegible]	[illegible]
1	R2	RES 820 1W 10%	[illegible]
1	R1	RES 3.9K 1W 10%	[illegible]
2	R5, R13	RES 10 1/4W [illegible]	[illegible]
2	R12, R10	RES 150 1/4W 5%	[illegible]
1	D3	DIODE ZENER [illegible]	[illegible]
1	D7	SCR [illegible]	[illegible]
4		SCR, PAN #4-40 [illegible]	[illegible]
1	D5	DIODE PWR [illegible]	[illegible]
2	D4, D6	DIODE PWR [illegible]	[illegible]
1	D2	DIODE ZENER [illegible]	[illegible]
1	D1	DIODE BRIDGE	[illegible]
2	C8, C9	CAP [illegible]	[illegible]
1	C1	CAP 31 [illegible]	[illegible]
2	C4, C3	CAP, [illegible]	[illegible]
1	C2	CAP 15 [illegible]	[illegible]
1	C11	CAP 27 [illegible]	[illegible]
2	C7, C10	CAP [illegible]	[illegible]
1	C5	CAP 2.2 [illegible]	[illegible]
1		ETCHED CIRCUIT BOARD	[illegible]
1		ASSY/DRILLING HOLE [illegible]	[illegible]
		X-Y COORDINATE HOLE LOCATION	[illegible]
		MODULE ECO HISTORY	[illegible]
		CIRCUIT SCHEMATIC	[illegible]
QTY.	REF DESIGNATION	DESCRIPTION	[illegible]

1		SCR, PHL PAN HD #6-32, 5/8 LG.	0000025-1	71
1		PACKING INSTRUCTIONS	[illegible]-3700074-0-0	70
1	R22	RES 680 1/4W 5%	[illegible]	69

74A 7R3C	7	12	
IC TYPE	GND	+5V	

GND AND 5V ARE USUALLY PIN 7 AND 14 RESPECTIVELY. EXCEPTIONS ARE STATED ABOVE.

IC PIN LOCATIONS

ITEM NO	AWG	FROM PT	TO PT

JUMPER LIST

1N3606			
1N4749			
DEC NO	EIA NO	DEC NO	EIA NO

SEMICONDUCTOR CONVERSION CHART

ETCH BOARD NO. [illegible]

PARTS LIST

5V REGULATOR

SIZE [illegible] SCALE [illegible]

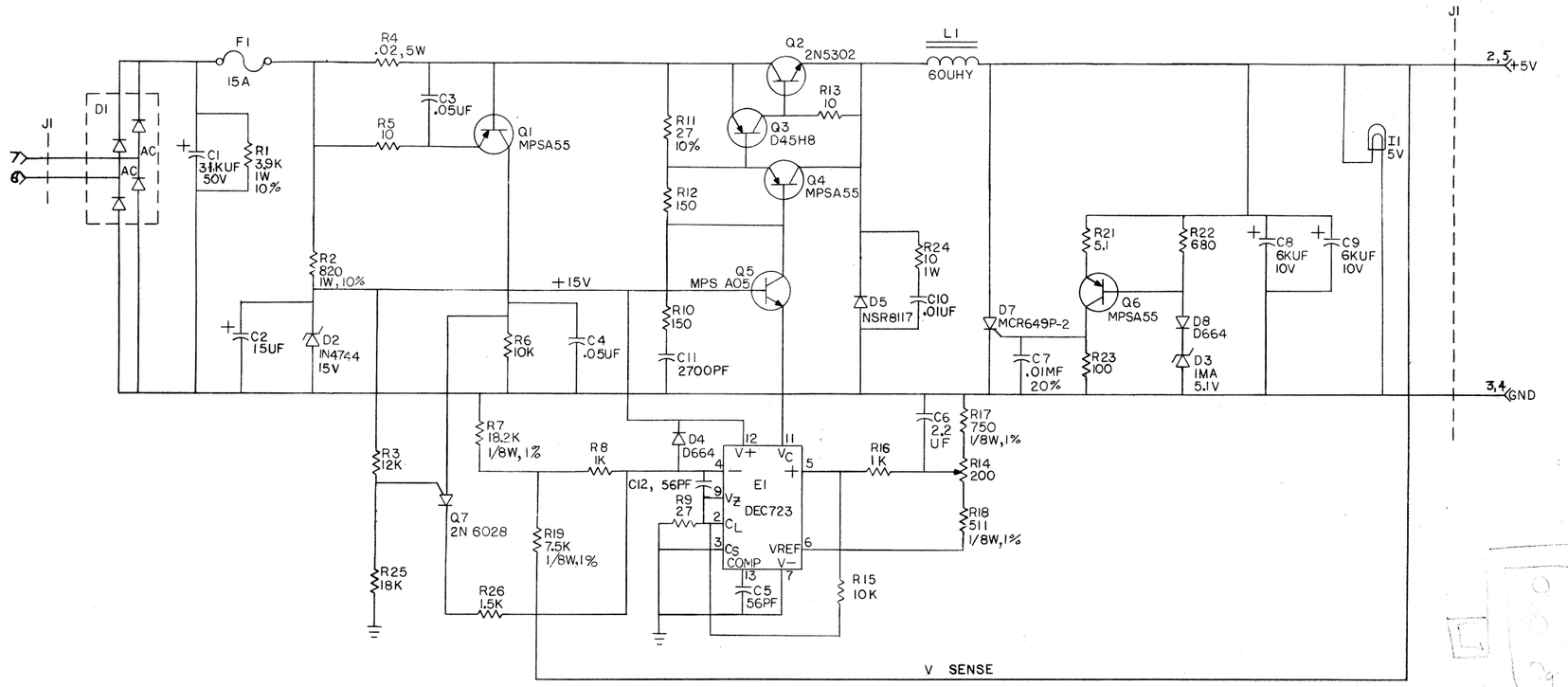

UNLESS OTHERWISE INDICATED:

RESISTORS ARE 1/4W, 5%

QTY	REF DESIGNATION	DESCRIPTION	PART NO.	ITEM NO.

PARTS LIST

ETCH BOARD REV F H

DEC NO.	EIA NO.	DEC NO.	EIA NO.
IN964A	SAME	MPSA55	
D664	IN3606	2N5302	
MCR649P-2		D45H8	
IN751A	SAME	MPSA05	
IN4744	SAME		
NSR8117			
2N6028			

SEMICONDUCTOR CONVERSION CHART

REV	CHANGE NO.	CHK	REVISIONS
L	H744-00001		
K	H744-00005		
J	H744-00004-4B		
H	H744-00003		
F	H744-00002		
E			

DRN. Roger V. Dussette DATE 11-2-71
CHK'D. Nancy Moore DATE 1-3-71
ENG. DATE 1/7/72
PROJ. ENG. DATE 1/7/72
PROD. DATE 1/13/72
NEXT HIGHER ASSY
SCALE
SHEET 1 OF

digital EQUIPMENT CORPORATION MAYNARD, MASSACHUSETTS

TITLE 5V REGULATOR

SIZE D CODE CS NUMBER H744-0-1 REV. L

DIST.

DEC FORM NO. DRD-135

WIRE TABLE

ITEM NO	DESCRIPTION AWG	COLOR	FROM POINT	FROM CONN	FROM TERM	TO POINT	TO CONN	TO TERM	WIRE LENGTH	SIGNAL
12	14	RED	1	P1-1	5	12	——	10	12	
11	↑	BLK	2	P1-2	↑	30	TB1-1	↑	9	
14		WHT	3	P1-3		7	——		10	
12		RED	4	P1-4		32	TB1-2		9.5	
12		RED	5	P1-5	↓	34	TB1-4		10.5	
14		WHT	6	P1-6	5	33	TB1-3		9.7	
12		RED	8	——	10	24	TB1-8		13.5	
14		WHT	9	——	10	26	TB1-6		12	
21		ORN	10	——	10	15	——		13.5	
13		VIO	11	——	10	14	——		9.2	
12	↑	RED	13	——	10	31	TB1-2	↑	7	
11	14	BLK	16	——	10	28	TB1-1	10	5.2	
15	18	BLK	17	——	9	22	J1-1	6	14	
15	18	BLK	39	J4-1	6				22.2	
15	18	BLK				42	J3-1	6	3.5	
17	18 TWP	RED	18	TB1-4	9	20	J5	18&20	23.5	
		WHT	19	TB1-6	9	21	J6	18&20	22	
19	18	BLU	23	J1-2	6	35	J2-1	6	22	
12	14	RED	25	TB1-8	10	38	J2-4	6	16	
14	14	WHT	27	TB1-3	10	37	J2-3	6	13	
15	18	BLK	29	TB1-1	9	36	J2-2	6	13	
15	18	BLK			6				17	
15	18	BLK	41	J4-3		44	J3-3	6	3.5	
12	14	RED	45	TB1-4	10	46	TB1-7	10	2.5	
14	14	WHT	47	TB1-3	10	48	TB1-5	10	2.0	
15	18	BLK	40	J4-2	6	43	J3-2	6	3.5	
11	14	BLK	49	——	10	50	——	22	6	

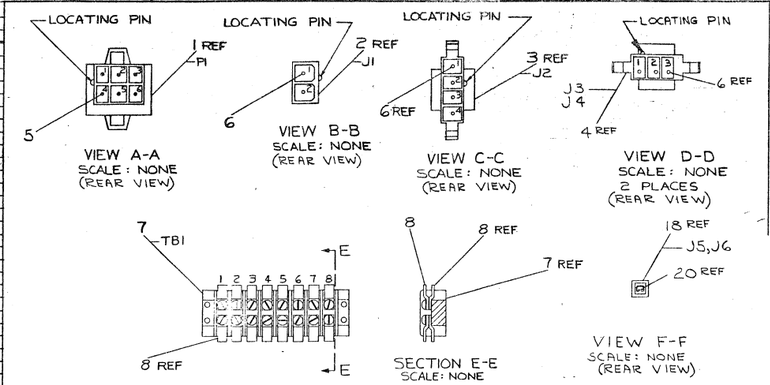

NOTES:
1. USE TIE WRAPS (X) (ITEM #16) APPROXIMATELY EVERY THREE (3) INCHES WHEN NECESSARY AND AT BREAKOUT POINTS.

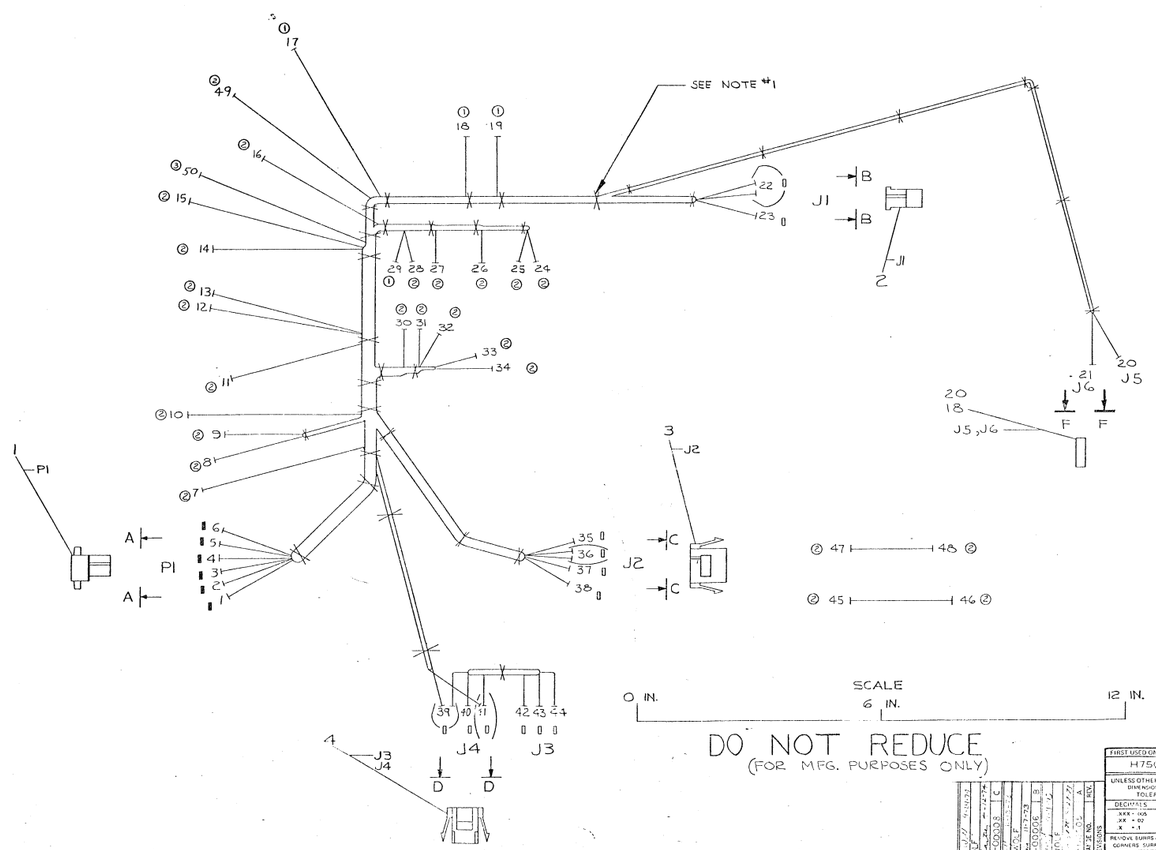

DO NOT REDUCE
(FOR MFG. PURPOSES ONLY)

SYM	QTY	DESCRIPTION	PART NO	ITEM
③	1	TERM. SOLDERLESS #20-364	9007928	22
	A/R	WIRE, #14 STRD, ORN	9107370-33	21
	2	MINI-FASTABS, #62281-1	1210820-2	20
	A/R	WIRE, #18 AWG STRD, BLU	9101370-66	19
	2	HOUSING, 1-480704-0	1210930-1	18
	A/R	WIRE, #18 AWG STRD TWP STD WIRE	9101930-27	17
X	A/R	TIE WRAP, PANDUIT, #SST1M	9007031	16
	A/R	WIRE, #14 STRD, BLK	9107370-00	15
	A/R	WIRE, #14 STRD, WHT	9107370-99	14
	A/R	WIRE, #14 STRD, VIO	9107370-77	13
	A/R	WIRE, #14 STRD, RED	9107370-22	12
	A/R	WIRE, #14 STRD, BLK	9107370-00	11
②	2.5	CONN. SOLDERLESS, AMPLESS #50-79	9007910	10
①	4	CONN. SOLDERLESS, AMPLESS #50-79	9007917	9
	32	TERM. LUG, OFFSET, AMP #2045-1	9007112	8
	1	TERM. BLOCK, CINCH #1-540	9006909	7
▯	12	SOCKET TERM. CONTACT (FEMALE)	1209379-01	6
▮	6	PIN CONTACT (MALE)	1209373-01	5
	2	CONN., MATE-N-LOCK, 3 PIN	1209350-03	4
	1	CONN., MATE-N-LOCK, 4 PIN	1209350-04	3
	1	CONN., MATE-N-LOCK, 2 PIN	1209350-02	2
	1	CONN., MATE-N-LOCK, 3 PIN	1209350-03	1

PARTS LIST

FIRST USED ON OPTION/MODEL: H750

UNLESS OTHERWISE SPECIFIED DIMENSIONS IN INCHES
TOLERANCES
DECIMALS: .XX ±.05, .XX ±.02, .X ±.1
ANGLES: ±0°30'
REMOVE BURRS AND BREAK SHARP CORNERS. SURFACE QUALITY ✓

MATERIAL: SEE PARTS LIST
FINISH: —

DRAWN: [illegible] DATE
CHK'D: DATE
ENG: DATE
PROJ ENG: DATE
PROD: DATE

NEXT HIGHER ASSY.: E-UA-H750-2-2
SCALE: 1/1
SHEET 1 OF 1

DIGITAL EQUIPMENT CORPORATION

TITLE: H750 POWER SUPPLY HARNESS

CODE: E | NUMBER: 7009207-C-0 | REV: C

REVISIONS			
A	11-17-73	[illegible]	[illegible]
B	11-19-73	[illegible]	[illegible]
C	11-20-73	[illegible]	[illegible]

digital EQUIPMENT CORPORATION
MAYNARD MASSACHUSETTS

DRAWING DIRECTORY

CUSTOMER PRINT SET INDEX

	SEQUENCE
DWG. DIRECTORY	B-DD-BCØ5-Ø
LINE SET 115V	C-UA-BCØ5H-Ø-Ø
LINE SET 230V	C-UA-BCØ5J-Ø-Ø
A.C INPUT BOX	D-UA-H4ØØ-Ø-Ø
A.C INPUT BOX (P.L)	A-PL-H4ØØ-Ø-Ø
PWR CONTROL BD. 115V	C-IA-5409824-Ø-Ø
PWR CONTROL BD. 230V	C-IA-5409825-Ø-Ø

THIS IS PRINT SET

UNIT VARIATIONS

VARIATION	TITLE	PRINT SET TYPE: BCØ5H-1
BCØ5H	LINE SET 115VAC 7 AMP	X
BCØ5J	LINE SET 230VAC 5 AMP	X

REVISIONS

REV	CHG. NO.	DATE

USED ON OPTION/MODEL: 11/Ø7

		DATE
DRN.	D. FONTAINE	4/5/72
CHK'D.	[illegible]	4-18-72
PROJ ENG.	[illegible]	4-18-72
PROD.	[illegible]	5/1/72
FIELD SERV.	[illegible]	5/3/72

TITLE: LINE SET

SIZE	CODE	NUMBER	REV
B	DD	BCØ5H-Ø	

SHEET 1 OF 3

DIST

DRB 106

DEC 16-(325)-1062-1-N871

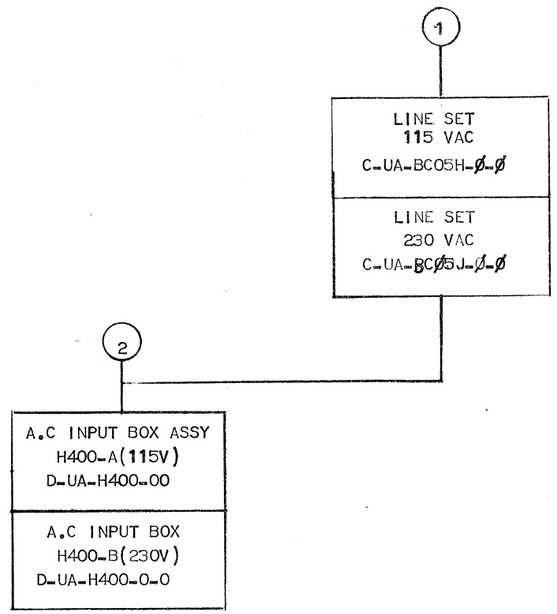

TITLE		SIZE	CODE	NUMBER	REV
LINE SET	SHEET 2 OF 3	B	DD	BCØ5H-Ø	

DRB 107
DEC 16-(325)-1062-3-N871

CUSTOMER PRINT SET						MFG. SET	ELECTRICAL FIND NO.	DRAWING NO.	REV	NO OF SHT	DESCRIPTION	OPTION NO.
BCØ5-H-1												
X							2.	C-IA-5409824-0-0		1	POWER CONTROL BD 115V	H400
X								C-IA-5409825-0-0		1	POWER CONTROL BD 230V	H400

CUSTOMER PRINT SET						MFG SET	MECHANICAL FIND NO.	DRAWING NO.	REV	NO OF SHT	DESCRIPTION	OPTION NO.
BCØ5-H-1												
X							1.	C-UA-BCØ5H-Ø-Ø		1	LINE SET 115V 7 AMP	BCØ5H
X								C-UA-BCØ5J-Ø-Ø		1	LINE SET 230V 5 AMP	BCØ5J
X							2.	D-UA-H4ØØ-Ø-Ø		1	AC INPUT BOX	H4ØØ
X								A-PL-H4ØØ-Ø-Ø		1	A.C INPUT BOX PARTS LIST	H4ØØ
								D-IA-5309845-0-0		1	BOX	H4ØØ
								C-MD-5309849-0-0		1	COVER	H4ØØ
								A-DC-5309899-0-0		1	PWR CONTROL DECAL 115V	H4ØØ
								A-DC-5309900-0-0		1	PWR CONTROL DECAL 230V	H4ØØ

TITLE	SHEET 3 OF 3	SIZE	CODE	NUMBER	REV
LINE SET		B	DD	BCØ5H-1	

DRB 108

DEC - 16 (325)-1062-2A-R272

NOTES:

1. CONNECT ITEM #1 (POWER CORD) AND ITEM #2 (AC INPUT BOX) PER CIRCUIT SCHEMATIC.
2. FOR INSTALLATION USE HEYCO #29 STRAIN RELIEF PLIERS

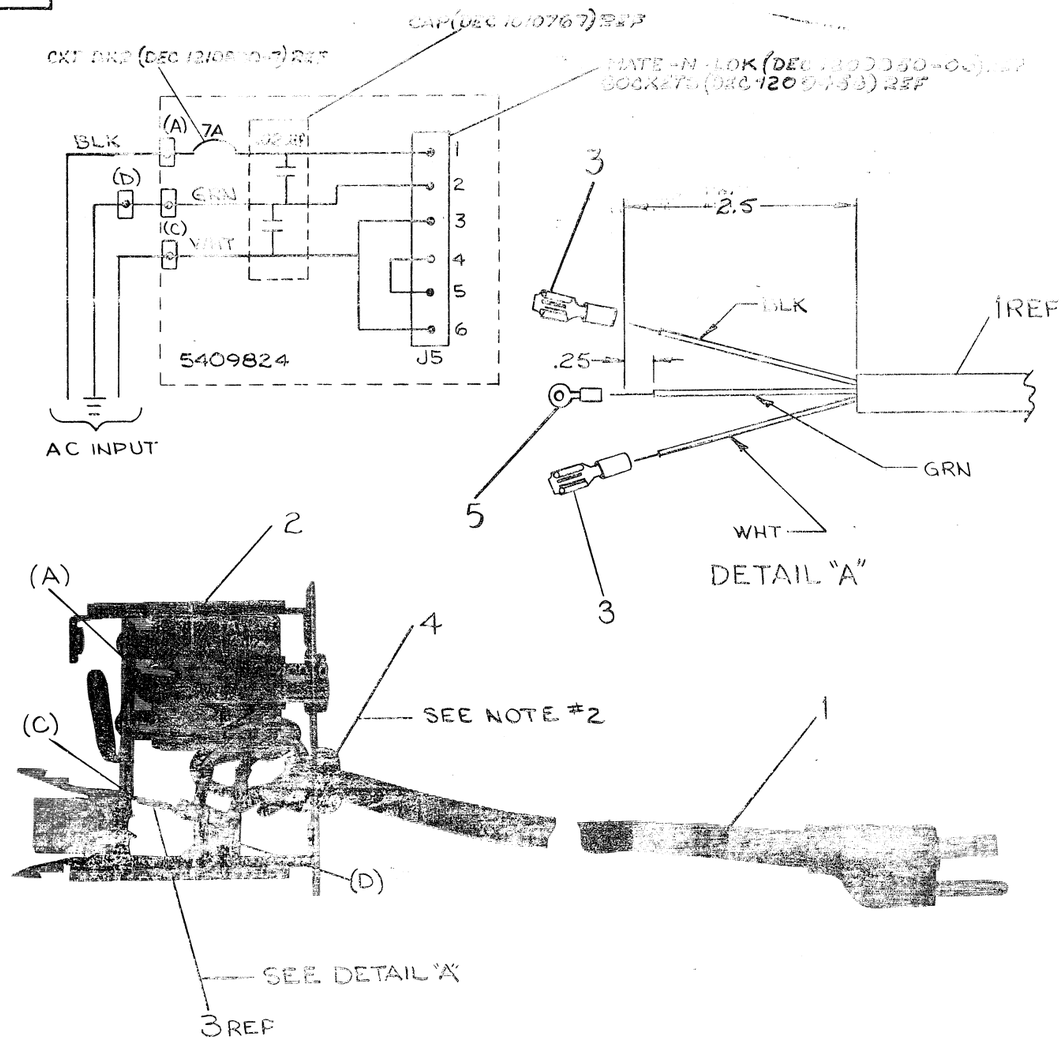

ITEM NO.	DESCRIPTION	PART NO.	QTY.
5	SOLDER CONN ARKLESS	9001929-0	1
4	STRAIN RELIEF SR-6N3-4	9008492-2	1
3	SOLDERLESS CONN. ARKLESS	9007919	2
2	AC INPUT BOX H400 A	D-UA-H400-0-0	1
1	POWER CORD 120V	170015-6	1

PARTS LIST

FIRST USED ON OPTION/MODEL	
11/05	

UNLESS OTHERWISE SPECIFIED DIMENSION IN INCHES. TOLERANCES

DECIMALS	ANGLES
.XXX = .005 .XX = .02 .X = .1	±0° 30'

REMOVE BURRS AND BREAK SHARP CORNERS SURFACE QUALITY ✓

MATERIAL —/—/—

FINISH —/—/—

DRN. T. Guillin	DATE 12-27-71	
CHK'D	DATE 1-4-72	
ENG. David DeMarinville	DATE 1-4-72	
PROJ. ENG. R. de Hoogh	DATE 1-7-72	
PROD. RK Peterson	DATE 1/12/72	

NEXT HIGHER ASSY. —/—/—

SCALE —/—/—

SHEET 1 OF 1

digital EQUIPMENT CORPORATION MAYNARD MASSACHUSETTS

TITLE

LINE SET

115V AC 7AMP

SIZE	CODE	NUMBER	REV.
C	UA	BC05H-0-0	

DIST. G

REV.	CHANGE NO.	CHK	
A	BC05H-00001		3-28-72
B	BC05H-00002		5-13-72
C	H400-00002		5-25-72
E	BC05H-00003		5-31-72

REVISIONS

DEC FORM NO. DRC 100-A

NOTES:

1. CONNECT ITEM #1 (POWER CORD) AND ITEM #2 (AC INPUT) PER CIRCUIT SCHEMATIC.
2. FOR INSTALLATION USE HAYCO #29 STRAIN RELIEF PLIERS.

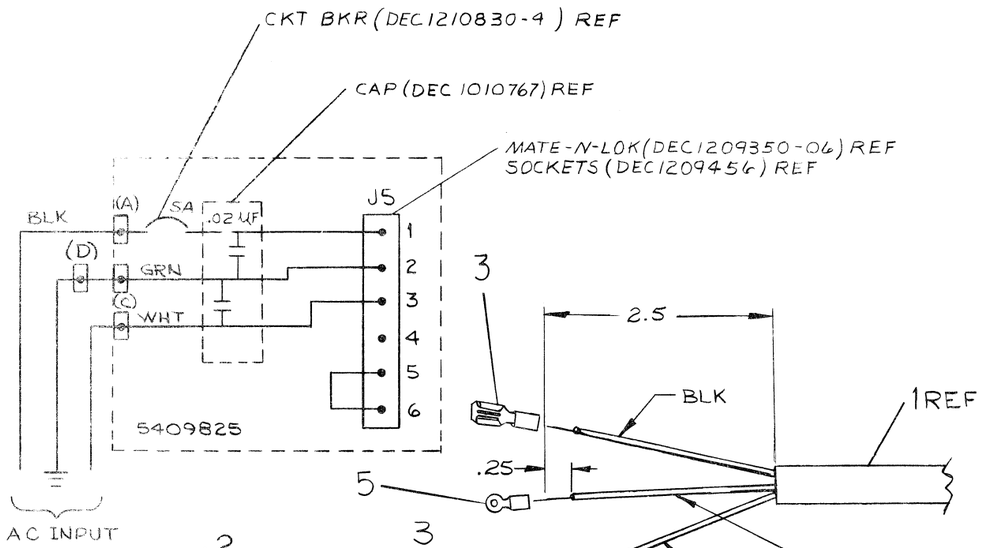

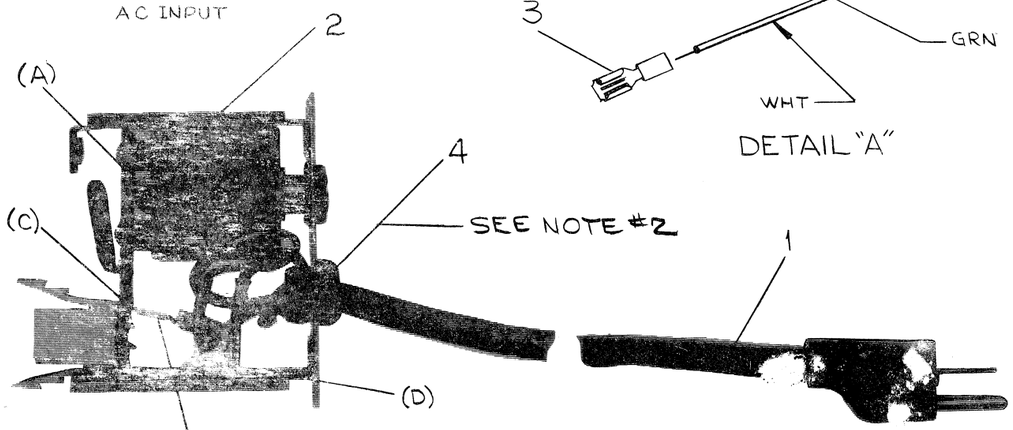

SHOWN WITHOUT COVER

ITEM NO.	PARTS LIST	PART NO.	QTY.
5	SOLDER CONN ARKLESS	9007929-0	1
4	GROMMET HEYCO SR-6N3-4	9008492-2	1
3	SOLDER CONN ARKLESS	9007919	2
2	AC INPUT BOX H400B	D-UA-H400-0-0	1
1	POWER CORD 240V	1700016-6	1

FIRST USED ON OPTION/MODEL: 11/05

UNLESS OTHERWISE SPECIFIED DIMENSION IN INCHES. TOLERANCES

DECIMALS	ANGLES
.XXX = .005 .XX = .02 .X = .1	±0° 30'

REMOVE BURRS AND BREAK SHARP CORNERS SURFACE QUALITY ✓

MATERIAL

FINISH

		DATE
DRN.	T. Guillin	12-27-71
CHK'D	Fontaine	1-4-72
ENG.	David De Moranville	1-4-72
PROJ ENG.	Ronald Hardy	1-7-72
PROD.	R.K. Peterson	1/7/72

NEXT HIGHER ASSY.

SCALE

SHEET 1 OF 1

digital EQUIPMENT CORPORATION MAYNARD MASSACHUSETTS

TITLE: LINE SET 230VAC 4 AMP

SIZE	CODE	NUMBER	REV.
C	UA	BC05J-0-0	

DIST. 6

REVISIONS

CHK	CHANGE NO.	REV.
	BC05J-00001	A
	H400-00002	B
	BC05J-00002	C
	BC05J-00003	D

WOLFF 12-8-72
R. BURTON 5-25-72
R. BURTON 11-2-72
R. BURTON 12-20-72
R. BURTON 1-2-73

DEC FORM NO. DRC 100-A

LEGEND		
NUMBER	VARIATION	USED ON
H400-A	115 VAC 7 AMP	BCØ5H
H400-B	230 VAC 4 AMP	BCØ5J
H400-C	115 VAC 10 AMP	BCØ5T
H400-D	230 VAC 5 AMP	BCØ5U

NOTES:

1. ITEM #11 (WIRE) AND TWO OF ITEM #12 (FASTON TABS) ARE TO BE CONNECTED FROM POINT D TO POINT B.

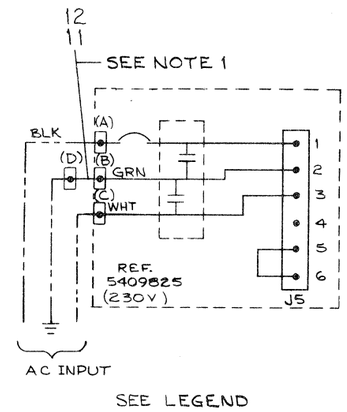

SEE LEGEND

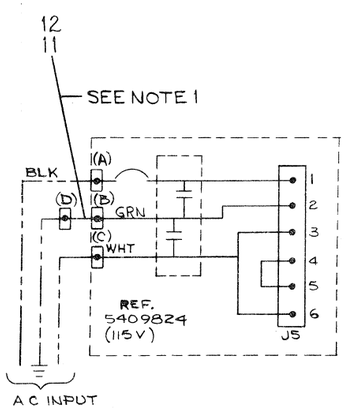

SEE LEGEND

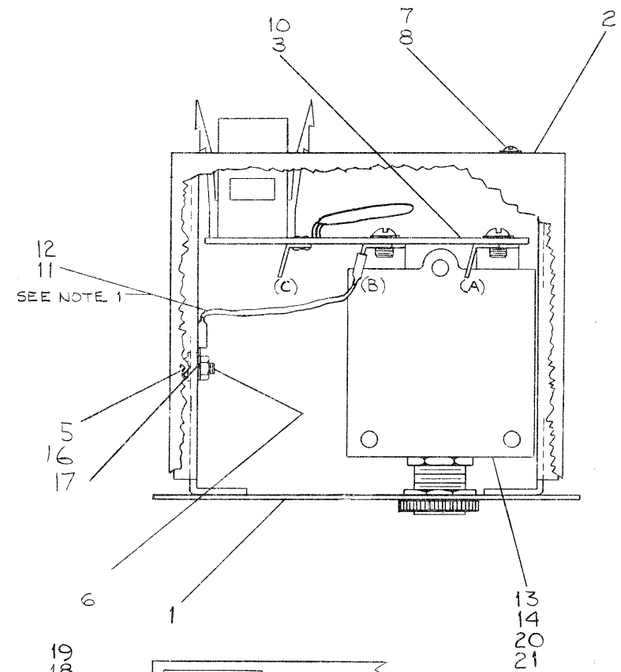

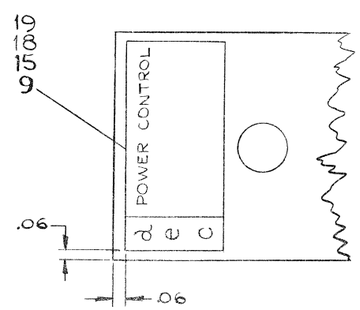

REVISIONS	CHANGE NO.	REV.	CHK.	
	H400-00002	A		R. BURTON 5-25-72
	H400-00003	B		R. BURTON 5-31-72
	H400-00004	C		R. BURTON 11-9-72
	H400-00005	D		R. BURTON 12-22-72
	H400-00007	E		R. BURTON 1-3-73
				T. Quillin 1-18-73
				R. BURTON 2-8-73
				R. BURTON 6-11-73
				R. BURTON 6-21-73

FIRST USED ON OPTION/MODEL	QTY.	DESCRIPTION	PART NO.	ITEM NO.
D-UA-BCØ5H-Ø-Ø		PARTS LIST		

UNLESS OTHERWISE SPECIFIED DIMENSION IN INCHES. TOLERANCES		DRN. T. Quillin	DATE 12-22-71
DECIMALS	ANGLES	CHKD.	DATE
.XXX = .005 .XX = .02 .X = .1	±0° 30'	ENG.	DATE 1-4-72
REMOVE BURRS AND BREAK SHARP CORNERS SURFACE QUALITY ✓		PROJ. ENG.	DATE 1-7-72
		PROD. R.K. Peterson	DATE 1/7/72
MATERIAL		NEXT HIGHER ASSY. D-UA-BCØ5H-Ø-Ø	
FINISH		SCALE	SHEET OF

Digital EQUIPMENT CORPORATION MAYNARD MASSACHUSETTS

TITLE AC INPUT BOX ASSY

SIZE	CODE	NUMBER	REV.
D	UA	H400-Ø-Ø	

DIST.

DEC FORM NO DRD 100-A

DIGITAL EQUIPMENT CORPORATION
MAYNARD, MASSACHUSETTS

PARTS LIST

MADE BY TYRONE QUILLIN	CHECKED [illegible]	SECTION 1
DATE 12-1-71	DATE 1-4-72	
ENG David [illegible]	PROD R.K. Peterson	ISSUED SECT. 1
DATE 1-4-72	DATE 1/7/72	

ITEM NO.	DWG NO./PART NO.	DESCRIPTION	H400-A (115V)	H400-B (230V)	H400 C (115V)	H400 D (230V)
1	D-IA-5309845-0-0	BOX	1	1	1	1
2	C-MD-5309849-0-0	COVER	1	1	1	1
3	C-IA-5409825-0-0	POWER CONTROL BOARD (230V)	–	1	–	1
4	~~9007113~~	~~DOUBLE FASTAB~~	~~1~~	~~1~~	–	–
5	9006011-1	SCR PHL PAN HD #4-40 x 3/8 LG	1	1	1	1
6	9006557	KEP NUT HEX HD #4-40	1	1	1	1
7	9006633	WASHER INT. #6	1	1	1	1
8	9006020-1	SCR PHL PAN HD #6-32 x ¼ LG	1	1	1	1
9	A-DC-5309899-0-0	PWR CONTROL DECAL 115V	1	–	–	–
10	C-IA-5409824-0-0	POWER CONTROL BOARD (115V)	1	–	1	–
11	9107360-55	#18 AWG STRD ~~TEF INS~~ (GRN 3 IN.LG)	1	1	1	1
12	9007917	FASTON TABS	1	1	1	1
13	1210830-4	CRK BREAKER (WOOD 4 AMP)	–	1	–	–
14	1210830-7	CRK BREAKER (WOOD 7 AMP)	1	–	–	–
15	A-DC-5309900-0-0	PWR CONTROL DECAL (230V)	–	1	–	–
16	9006632	WASHER #4 INTERNAL TOOTH	1	1	1	1
17	9007929 01	CRIMP-ON EYELET	1	1	1	1
18	A-DC-7410727-0-0	PWR CONT DECAL	–	–	1	–
19	A-DC-7410726-0-0	PWR CONT DECAL	–	–	–	1
20	1210830-5	CKT BREAKER (WOOD 5 AMP)	–	–	–	1
21	1210830-10	CKT BREAKER (WOOD 10 AMP)	–	–	1	–

TITLE	ASSY NO.	SIZE	CODE	NUMBER	REV.	ECO NO.
AC INPUT BOX ASS'Y	D-UA-H4ØØ-Ø-Ø	A	PL	H4ØØ-Ø-Ø	E	H400-00007
	SHEET 1 OF 1	DIST.				

DEC FORM DRA 110 DEC 16-(325)-1031-N870

NOTES:

1. FOR CIRCUIT SCHEMATIC REFER TO DWG D-UA-H4ØØ-Ø-Ø
2. ETCHED BOARD #4500982 MUST BE U.L. APPROVED. MANUFACTURER'S U.L. NUMBER LOCATION IS SHOWN ON AH DRAWING.

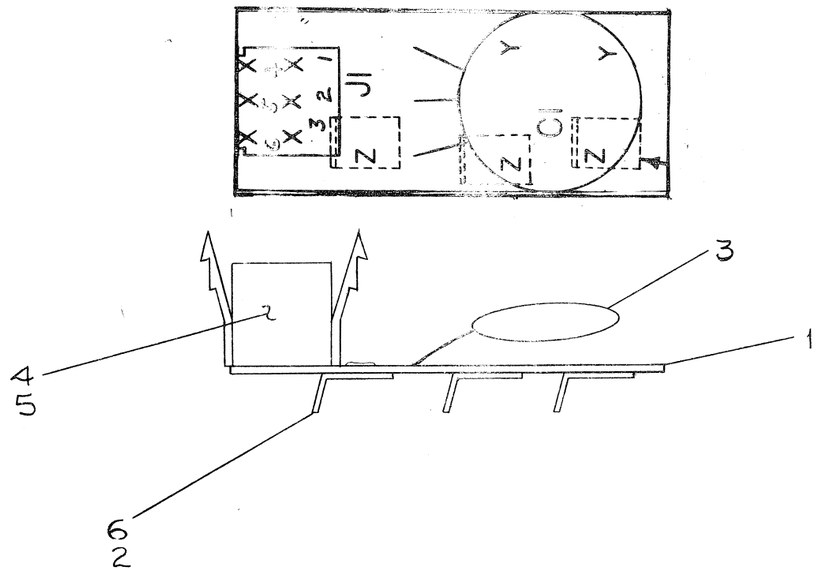

QTY.	REF DESIGNATION	DESCRIPTION	PART NO.	ITEM NO.
		ASSY/DRILLING HOLE LAYOUT	D-AH-5409824-05	REF
3		FASTON TAB	9008219	6
6		P.C. SOCKETS FEMALE	1209456	5
1	J1	MATE-N-LOCK 6-PIN	1209350-06	4
1	C1	CAP INPUT .02 μF	10107617	3
3		EYELET # GS4-5	9009000	2
		ETCHED CIRCUIT B D	[illegible]	1
		MODULE ECO HISTORY	[illegible]	REF
		X Y COORDINATE HOLE LOCATION	[illegible]	REF

PARTS LIST

FIRST USED ON OPTION/MODEL: H4ØØ A

UNLESS OTHERWISE SPECIFIED DIMENSION IN INCHES. TOLERANCES

DECIMALS	ANGLES
.XXX = .005 .XX = .02 .X = .1	±0° 30'

REMOVE BURRS AND BREAK SHARP CORNERS SURFACE QUALITY ✓

MATERIAL —/—/—

FINISH —/—/—

		DATE
DRN.	T. Rewitzer	12-8-71
CHK'D	[illegible]	1-4-72
ENG.	[illegible]	1-4-72
PROJ. ENG.	[illegible]	1-6-72
PROD.	R.K. Peterson	1/7/72

NEXT HIGHER ASSY. C-UA-H4ØØ-Ø-Ø

SCALE —/—/—

SHEET 1 OF 1

DIGITAL EQUIPMENT CORPORATION MAYNARD, MASSACHUSETTS

TITLE POWER CONTROL BOARD (115V)

SIZE	CODE	NUMBER	REV.
C	IA	5409824-0-0	C

DIST. 6

REVISIONS			
CHANGE NO.			REV.
5409824-00001	B. Neale	2-1-72	A
5409824-00002	R. Burton	5/22/72	B
5409824-00003	R. Wolf	10-24-73	C

R. WOLF 12-2-72

REV. C
NUMBER 5409824-0-0
SHEET 1 OF 1
SIZE B

NOTES:

1. FOR CIRCUIT SCHEMATIC REFER TO DWG D-UA-H4ØØ-Ø-Ø.
2. ETCHED BOARD # 5009822 MUST BE U.L. APPROVED. MANUFACTURER'S U.L. NUMBER LOCATION IS SHOWN ON AH DRAWING.

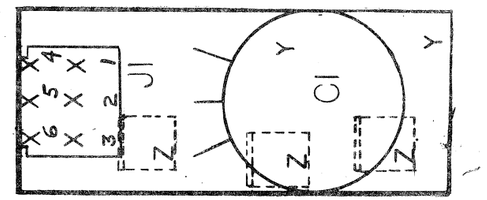

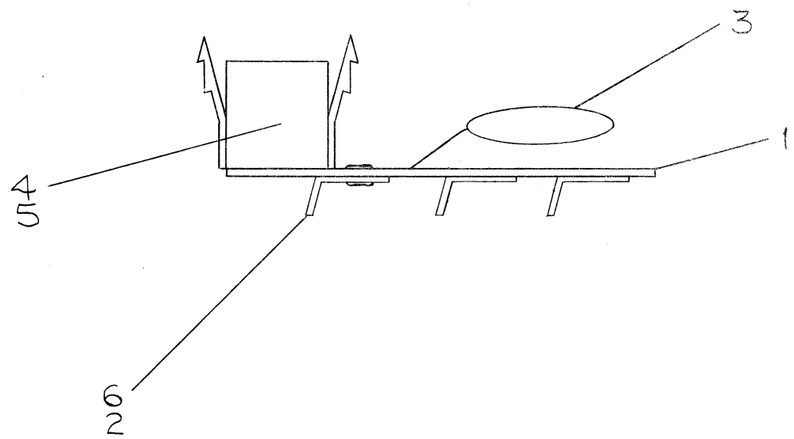

QTY.	REF DESIGNATION	DESCRIPTION	PART NO.	ITEM NO.
		ASSY/DRILLING HOLE LAYOUT	D-AH-5409825-0-5	REF
3		FASTON TAB	9008219	6
6		P.C. SOCKETS MALE	1209456	5
1	J1	6-PIN MATE-N-LOCK	1209350-06	4
1	C1	CAP. INPUT .02 µF	1010767	3
3		EYELET #654-5	9009000	2
1		ETCHED CIRCUIT BOARD	5009822	1
		MODULE ECO HISTORY	B-MH-5409825-0-6	REF
		X-Y COORDINATE HOLE LOCATION	K-CO-5409825-0-4	REF

PARTS LIST

FIRST USED ON OPTION/MODEL: H4ØØ B

UNLESS OTHERWISE SPECIFIED DIMENSION IN INCHES TOLERANCES
DECIMALS .XXX = .005 .XX = .02 .X = .1
ANGLES ±0° 30'
REMOVE BURRS AND BREAK SHARP CORNERS SURFACE QUALITY ✓
MATERIAL —
FINISH —

		DATE
DR.	F. Gulbin	12-5-71
CHK'D.	D. Lebrun	1-4-72
ENG.	[illegible]	1-4-72
PROJ. ENG.	[illegible]	1-7-72
PROD.	R.K. Peterson	1/7/72

NEXT HIGHER ASSY. C-UA-H4ØØ-Ø-Ø
SCALE —
SHEET 1 OF 1

digital EQUIPMENT CORPORATION
MAYNARD MASSACHUSETTS

TITLE
POWER CONTROL BOARD (230V)

SIZE	CODE	NUMBER	REV.
C	IA	5409825-0-0	B

DIST.

REVISIONS			
CHK	CHANGE NO.		REV.
	5409825-00001	R. WOLF	A
	5409825-00002	R. WOLF	B

DEC FORM NO. DRC 106-3

LEGEND	
NUMBER	VARIATION
	ITEM NO. 1
BCØ5T-06	1700015-6
BCØ5T-09	1700015-9

NOTES:
1. CONNECT ITEM #1 (POWER CORD) AND ITEM #2 (A.C. INPUT BOX) PER FIELD SCHEMATIC.
2. FOR INSTALLATION USE HOYCO #29 STRAIN RELIEF PLIERS.

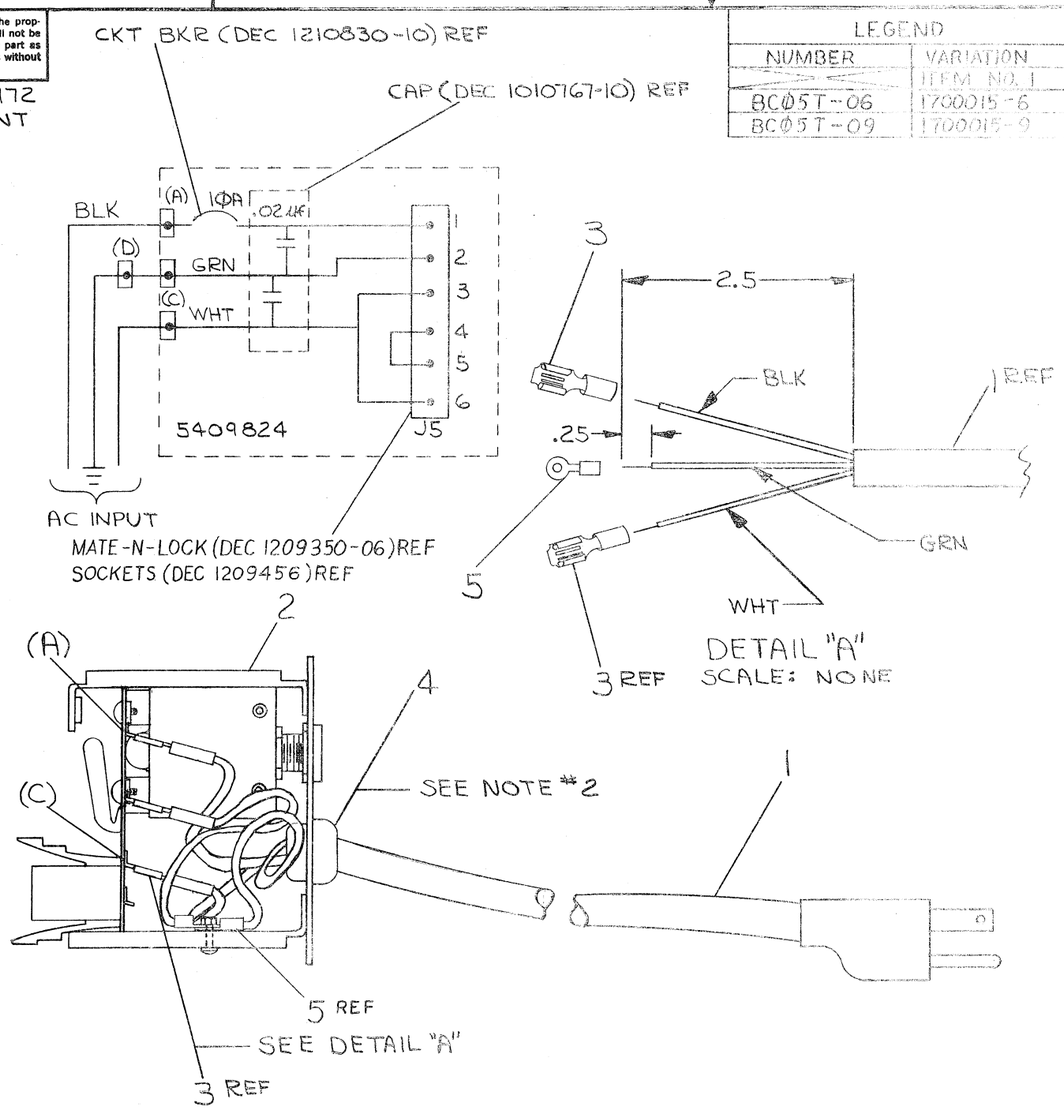

1	SOLDER CONN.		5
1	STRAIN RELIEF GNB-4		4
2	SOLDERLESS CONN.		3
1	A.C. INPUT BOX H4005		2
1	POWER CORD 120V		1
QTY	DESCRIPTION		ITEM

PARTS LIST

REVISIONS			
CHK	CHANGE NO.		REV.
	BCØ5T-00001		A
	9-6-73		
	C. BLASI		
	11-9-72		
	BCØ5T-00002		B
	6-11-73		
	C. BLASI		
	6-15-73		

3RUNING 40-107 15968

FIRST USED ON OPTION/MODEL	11/35
UNLESS OTHERWISE SPECIFIED DIMENSION IN INCHES. TOLERANCES	
DECIMALS	ANGLES
.XXX = .005	±0° 30'
.XX = .02	
.X = .1	
REMOVE BURRS AND BREAK SHARP CORNERS SURFACE QUALITY	
MATERIAL	
FINISH	

DRN.		DATE 11-21-72
CHKD.		DATE 12-5-72
ENG.		DATE 1-16-73
PROJ. ENG.		DATE FEB-73
PROD. ENGR.		DATE 2-21-73
NEXT HIGHER ASSY.	E-AD-BA11-D-Ø	
SCALE	NONE	
SHEET	1 OF 1	

TITLE
LINE SET
115V A.C. 10 AMP

SIZE	CODE	NUMBER	REV.
C	1A	BCØ5T-Ø-Ø	B

DEC FORM NO.
DRC 100-A

WIRE TABLE

ITEM NO.	DESCRIPTION AWG	COLOR	FROM POINT	CONNECTION	TERM	TO POINT	CONNECTION	TERM
9	22	RED	24	J10-1	6	19	J9-3	8
12	18	RED	11	P1-6	7			
9	22	RED	25	J11-1	6	27	J12-2	8
12	18	RED	20	J9-4	8			
						16	P1-4	7
12	18	RED	26	J12-1	8	1	J1-1	6
12	18	RED	2	J2-1	6	15	P1-1	7
13	18	VIO	3	J3-1	6	5	J5-1	8
13	18	VIO	8	J6-1	8			
14	18	BLK	4	J4-1	6	21	J9-5	8
14	18	BLK	14	P1-2	7			
14	18	BLK	10	J6-3	8	7	J5-3	8
15	18	GRY	6	J5-2	8	9	J6-2	8
11	18	WHT	23	J9-1	8	12	P1-3	7
10	22	WHT	18	J8-1	6			
12	18	RED	22	J9-2	8	13	P1-5	7
9	22	RED	17	J7-1	6			

NOTES:

1. USE TIE WRAPS (ITEM #16) APPROXIMATELY EVERY THREE INCHES WHEN NECESSARY AND AT EVERY BREAKOUT POINT
2. CAPACITOR SHOULD BE CRIMPED TOGETHER WITH PART 12 & 16. LEADS SHOULD BE INSULATED AND NOT LONGER THAN 1 INCH.

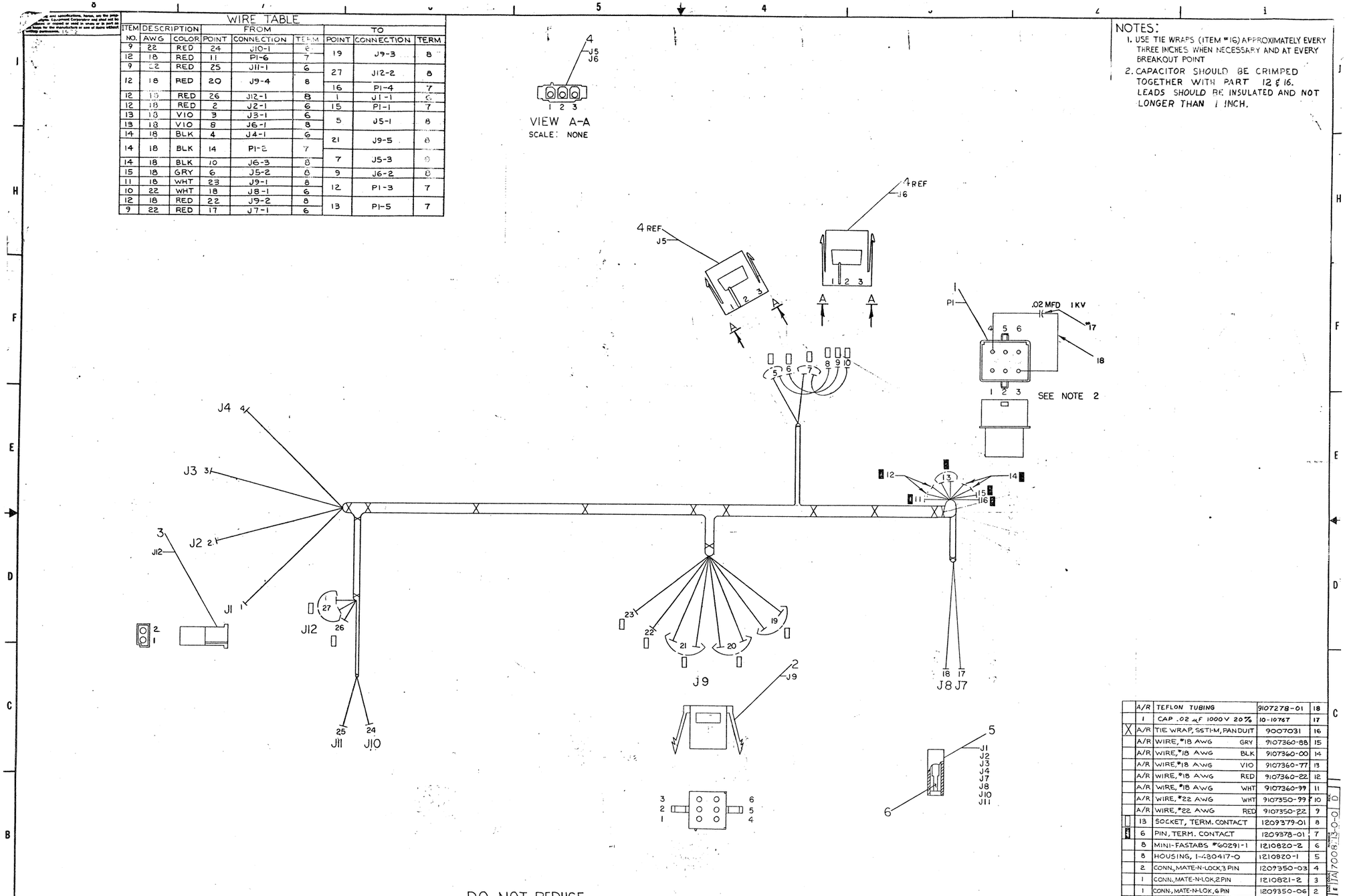

	A/R	TEFLON TUBING	9107278-01	18
	1	CAP .02 µF 1000V 20%	10-10767	17
X	A/R	TIE WRAP, SSTHM, PANDUIT	9007031	16
	A/R	WIRE, #18 AWG GRY	9107360-88	15
	A/R	WIRE, #18 AWG BLK	9107360-00	14
	A/R	WIRE, #18 AWG VIO	9107360-77	13
	A/R	WIRE, #18 AWG RED	9107360-22	12
	A/R	WIRE, #18 AWG WHT	9107360-99	11
	A/R	WIRE, #22 AWG WHT	9107350-99	10
	A/R	WIRE, #22 AWG RED	9107350-22	9
	13	SOCKET, TERM. CONTACT	1209379-01	8
	6	PIN, TERM. CONTACT	1209378-01	7
	8	MINI-FASTABS #60291-1	1210820-2	6
	8	HOUSING, 1-480417-0	1210820-1	5
	2	CONN., MATE-N-LOK, 3 PIN	1209350-03	4
	1	CONN., MATE-N-LOK, 2 PIN	1210821-2	3
	1	CONN., MATE-N-LOK, 6 PIN	1209350-06	2
	1	CONN., MATE-N-LOK, 6 PIN	1209351-06	1

QTY.	DESCRIPTION	PART NO.	ITEM NO.

PARTS LIST

FIRST USED ON OPTION/MODEL: PDP-1105

UNLESS OTHERWISE SPECIFIED DIMENSION IN INCHES. TOLERANCES
DECIMALS: XXX = .005, XX = .02, X = .1
ANGLES: ±0°30'

REMOVE BURRS AND BREAK SHARP CORNERS. SURFACE QUALITY ✓

MATERIAL: SEE PARTS LIST

FINISH: —

DRN. C. Graham 9-6-72
CHK'D. C. Toscanes 9-11-72
ENG. 9-12-72
PROJ. ENG. 9-12-72
PROD. 9-12-72

NEXT HIGHER ASSY. D-UA-1105-0-0

SCALE 1/2
SHEET 1 OF 1

EQUIPMENT CORPORATION
NEWTON, MASSACHUSETTS

TITLE: AC INPUT HARNESS (PDP1105)

SIZE	CODE	NUMBER	REV.
E	IA	7006713-0-0	D

DIST

REV.	CHANGE NO.	CHK.	REVISIONS
D	11/05-00042		
C	11/05-00036		
B	11/05-00013	R. BURTON	
A			

DWG. NO. 7006713-0-0 REV. D

LEGEND	
NUMBER	VARIATION
	ITEM NO. 1
BC05U-06	1700016-6
BC05U-09	1700016-9

NOTES:

1. CONNECT ITEM #1 (POWER CORD) AND ITEM #2 (AC INPUT BOX) PER CIRCUIT SCHEMATIC.
2. FOR INSTALLATION USE HEYCO #29 STRAIN RELIEF PLIERS.

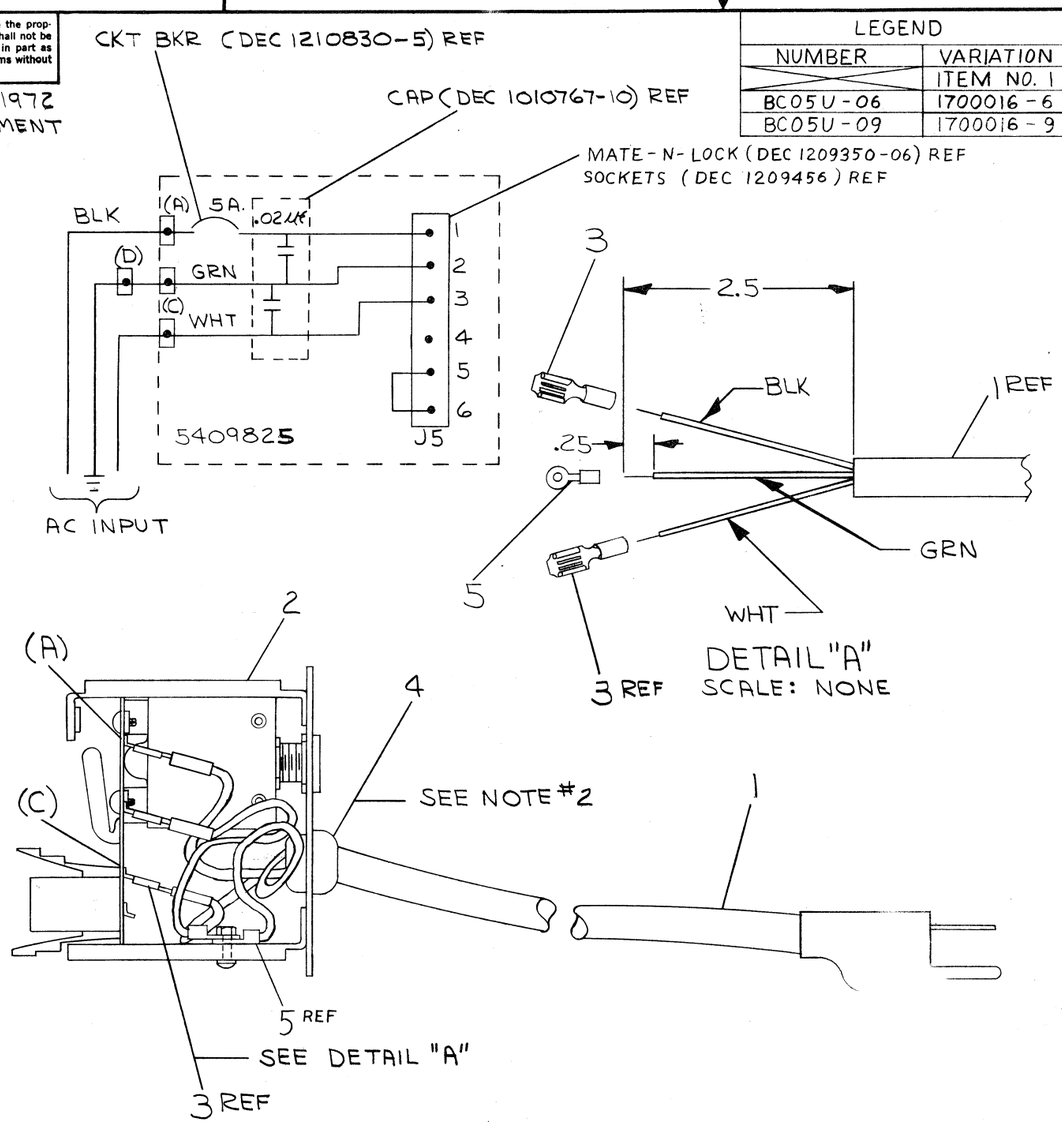

SHOWN WITHOUT COVER

QTY.	DESCRIPTION	PART NO.	ITEM NO.
1	SOLDER CONN.	9007927-0	5
1	STRAIN RELIEF 6N3-4	9008492-2	4
2	SOLDER CONN.	9007917	3
1	A.C. INPUT BOX H4ØØD	H4ØØ-D	2
1	POWER CORD 240V	SEE LEGEND	1

PARTS LIST

FIRST USED ON OPTION/MODEL: 11/35

UNLESS OTHERWISE SPECIFIED DIMENSION IN INCHES. TOLERANCES

DECIMALS	ANGLES
.XXX = .005 .XX = .02 .X = .1	±0° 30'

REMOVE BURRS AND BREAK SHARP CORNERS SURFACE QUALITY ✓

MATERIAL —/—/—

FINISH —/—/—

		DATE
DRN.	K. Sands	11-21-72
CHK'D		12-5-72
ENG.	C.R. Blasi	1-16-73
PROJ. ENG.	C.R. Blasi	1-16-73
PROD.		2-21-73

NEXT HIGHER ASSY. E-AD-BA11-D-Ø

SCALE NONE

SHEET 1 OF 1

digital EQUIPMENT CORPORATION MAYNARD MASSACHUSETTS

TITLE LINE SET 230V AC. 5 AMP

SIZE	CODE	NUMBER	REV.
C	UA	BCØ5U-Ø-Ø	B

DIST.

REVISIONS			
CHANGE NO.	CHK		REV.
BCO5U-00001	PM	J. Blasi 4-6-73	A
		C. BLASI C.R. Blasi 4-13-73	
BCØ5U-00002	PM	Ernie A. 6-11-73	B
		C. BLASI C.R. Blasi 6-15-73	

BRUNING 40-107 15968

DEC FORM NO. DRC 100-A

SIZE C CODE UA NUMBER BCØ5U-Ø-Ø REV. B

WIRE TABLE

ITEM NO.	DESCRIPTION AWG	DESCRIPTION COLOR	FROM POINT	FROM CONNECTION	FROM TERM	TO POINT	TO CONNECTION	TO TERM	REMARKS
5	#18	BLU	1	P1-9	7	12	—	6	
	TWP	BLK	2	P1-2		11	—		
4	#18	BLK	2	P1-2		15	—		
	TWP	RED	3	P1-3		16	—		
3	#18	RED	3	P1-3		9	—		
1	#22	YEL	4	P1-1		10	—		
2	#22	VIO	5	P1-6		8	—	6	
10	#22	BRN	6	P1-4		14	—	12	
11	#22	ORN	7	P1-5	7	13	—	12	

NOTES:

1. USE CABLE TIES (X) ITEM #9 AS SHOWN AND AT BREAK OUT POINTS WHERE NECESSARY.

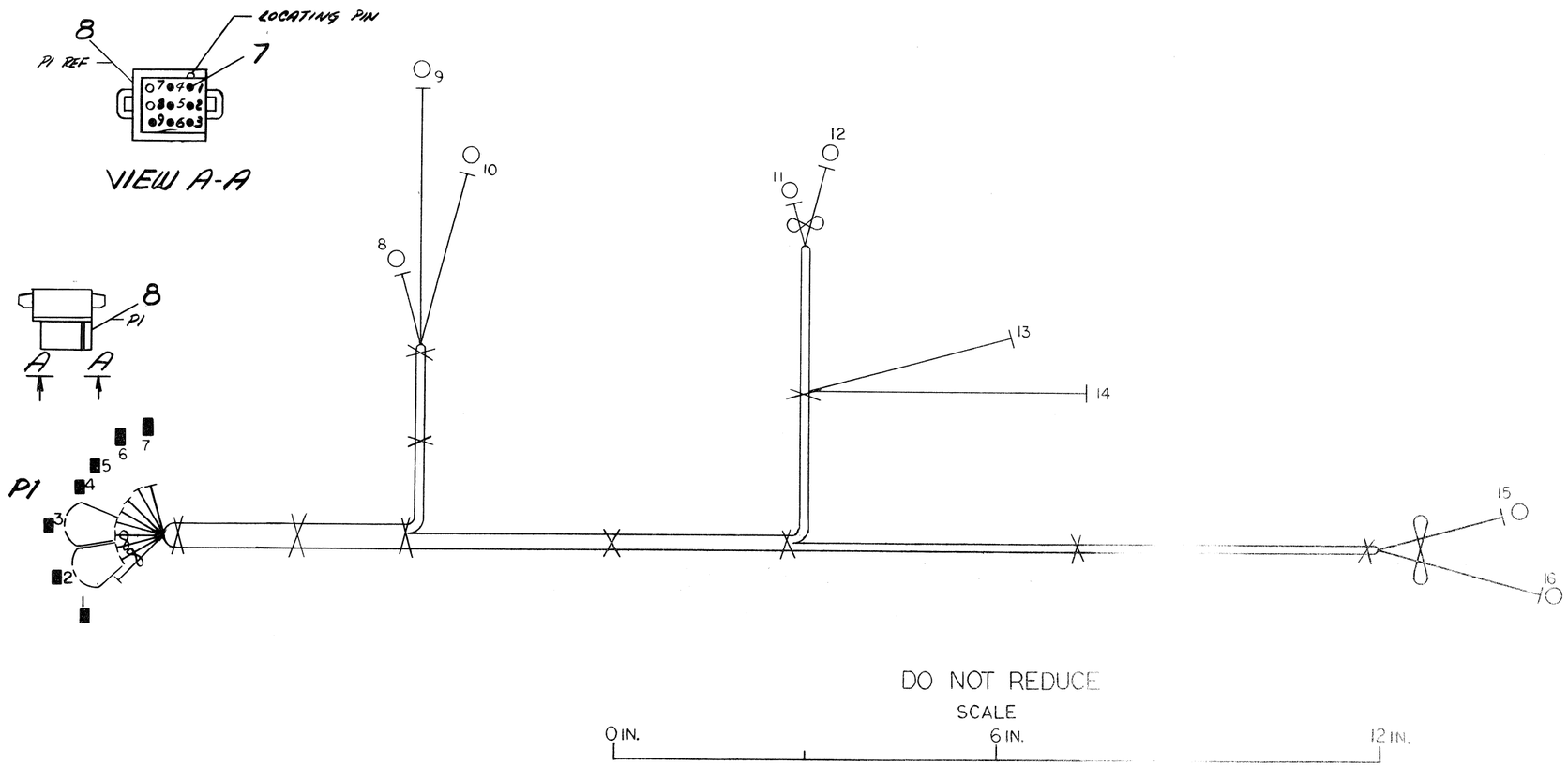

	2	[illegible]	[illegible]	11
	1/2	WIRE #22 [illegible] (0.80)	9107350-33	10
	1/2	WIRE #22 [illegible] (5.00)	9107350-11	10
X	A/R	TIE, CABLE PANDUIT SST 15M	9007080	9
	1	CONN., MATE-N-LOCK 9 PIN MALE	1209351-09	8
	7	PIN, MATE-N-LOCK MALE	1209378-01	7
	7	TERM, AMP TAB RED	[illegible]	6
	A/R	WIRE, [illegible] BRD [illegible]	[illegible]	5
	A/R	WIRE, [illegible]	[illegible]	4
	A/R	WIRE, #18 AWG STRD RED	[illegible]	3
	A/R	WIRE, #22 AWG STRD [illegible]	[illegible]	2
	A/R	WIRE, #22 AWG STRD YEL	[illegible]	1
	QTY	DESCRIPTION	PART NO.	ITEM NO.

PARTS LIST

FIRST USED ON DIGITAL MODEL: PDP 11Ø5

UNLESS OTHERWISE SPECIFIED DIMENSION IN INCHES TOLERANCES
DECIMALS: XXX = .005, XX = .02, X = .1
ANGLES: 1/2° 30'
REMOVE BURRS AND BREAK SHARP CORNERS SURFACE QUALITY ✓
MATERIAL: SEE PARTS LIST
FINISH

DEN: [illegible] DATE
CHK: [illegible] DATE
ENG: [illegible] DATE
PROD: [illegible] DATE
NEXT HIGHER ASSY: D-UA-11Ø5-Ø-0
SCALE: 1/4

DIGITAL EQUIPMENT CORPORATION MAYNARD, MASSACHUSETTS

TITLE: HARNESS DC (PDP 11Ø5)

SIZE D | CODE TA | NUMBER 7008856-0-0 | REV.

REVISIONS: REV. | CHANGE NO. | CHK

DEC FORM NO DRD 100-A

SEE NOTE #2

WIRE TABLE

ITEM NO	DESCRIPTION AWG	COLOR	FROM POINT	FROM CONN	ITEM	TO POINT	TO CONN	ITEM	LENGTH	SIGNAL NAME
17	14	BLU	1	P1-9	2	20	TB1-14	SOLDER	27.50	-15V
16	18	VIO	2	P1-6	2	27	TB1-5		29.00	DCLO
21	12	BLK	5	P1-2	2	25	TB1-7		25.50	GND (1)
18	18	YEL	7	P1-1	2	21	TB1-13		28.25	ACLO
13	12	RED	3	P1-3	2	22	TB1-12		27.25	+5V(1)
20	14	GRY	4	P1-5	2	23	TB1-11		27.00	+15V
15	14	ORN	6	P1-4	2	24	TB1-10		26.75	L.T.C.
13	14	RED	8	P2-2	2	17	TB1-17		42.75	+5V
13	14	RED	11	P2-5	2	16	TB1-16		42.50	
14	14	BLK	9	P2-3	2	19	TB1-18		43.25	GND2
14	14	BLK	10	P2-4	2	13	TB1-15	SOLDER	42.25	
23	20 TWP	BLK	28	P5	4&5	12	P3-4	2	31.50	
		WHT	29	P4	4&5	13	P3-3	2	31.50	
9	18 TWP	RED	28	P5	4&5	30	P7	4&5	8.50	
		WHT	29	P4	4&5	31	P6	4&5	8.50	
10	18 TWP	BLK	14	P3-2	2	33	/	3	50.25	
		BLU	15	P3-1	2	32	/	3	50.25	
17	14	BLU	34	P2-6	2	36	J1-1	26	6.00	
17	14	BLU	35	P2-7	2	37	J1-2	26	6.00	

NOTES:

1. USE TIE WRAPS (X)(ITEM #7 & #8) APPROXIMATELY EVERY THREE (3) INCHES WHEN NECESSARY, AND AT EVERY BREAKOUT POINT.
2. ITEM #21 (12 GA BLK) AND ITEM #16 (18 GA. VIO) ARE SEPERATE WIRES BUT A TWISTED PAIR SHALL BE MADE OF THEM BEFORE PLACING THEM IN THE HARNESS.
3. SHIELDED GND FOR WIRE TO RAMS TO BE CONNECTED ON P2, P5 END ONLY.
4. SOLDER ITEM 22 TO SHIELD WIRE. MAKE 5 BLU WIRE AT LEAST 2" LONG.

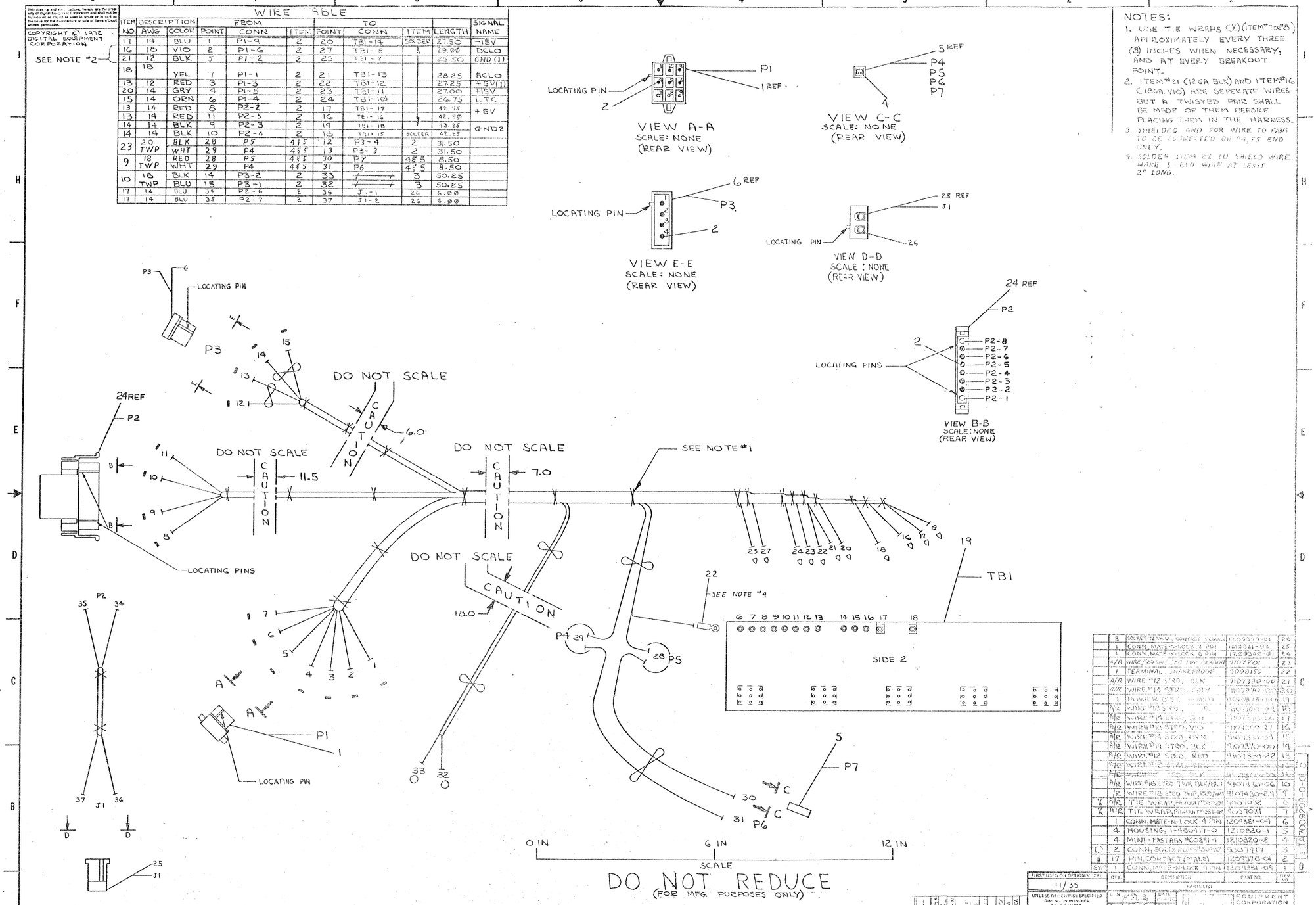

	2	SOCKET TERMINAL CONTACT TYPE	1209319-21	26
	1	CONN, MATE-N-LOCK 3 PIN	1103311-02	25
	1	CONN, MATE-N-LOCK 6 PIN	1209348-01	24
	A/R	WIRE #20 SHIELDED TWP BLK/WHT	1107701	23
	1	TERMINAL, SHAKEPROOF	1008150	22
	A/R	WIRE #12 STRD, BLK	1107380-00	21
	A/R	WIRE #14 STRD, GRY	1107390-00	20
	1	POWER DIST. [illegible]	[illegible]	19
	A/R	WIRE #18 STRD, YEL	1107300-01	18
	A/R	WIRE #14 STRD, GRN	1107390-02	17
	A/R	WIRE #18 STRD, VIO	1107300-17	16
	A/R	WIRE #14 STRD, ORN	1107390-01	15
	A/R	WIRE #14 STRD, BLK	1107390-00	14
	A/R	WIRE #12 STRD, RED	1107380-22	13
	A/R	WIRE [illegible]	[illegible]	12
	A/R	WIRE [illegible]	[illegible]	11
	A/R	WIRE #18 E-20 TWP BLK/BLU	1101430-06	10
	A/R	WIRE #18 E-20 TWP, RED/WHT	1101430-21	9
X	A/R	TIE WRAP, PINDAR TESTHIN	1101032	8
X	A/R	TIE WRAP, PINDAR TESTHIN	1101031	7
	1	CONN, MATE-N-LOCK 4 PIN	1209351-04	6
	4	HOUSING, 1-480417-0	1210820-1	5
	4	MINI-FASTABS #60241-1	1210820-2	4
(C)	2	CONN, SOLDERLESS #5-320	1201917	3
J	17	PIN, CONTACT (MALE)	1209378-01	2
SYM	1	CONN, MATE-N-LOCK 4 PIN	1209351-09	1
	QTY	DESCRIPTION	PART NO.	REV NO.

PARTS LIST

FIRST USED ON OPTIONAL SEL
11/35

UNLESS OTHERWISE SPECIFIED DIMENSIONS IN INCHES
TOLERANCES
DECIMALS: .XXX ± .005, .XX ± .02, .X ± .1
ANGLES: ±0°30'
REMOVE BURRS, BREAK SHARP EDGES, SURFACE QUALITY
MATERIAL: SEE PARTS LIST
FINISH

DIGITAL EQUIPMENT CORPORATION

TITLE: PDP 11/35 POWER TO DISTRIBUTION BOARD HARNESS

NEXT HIGHER ASSY: 5-CM-B11-D

SIZE: E | NUMBER: LA7000208-0-0 | REV: C

SCALE: 1/1 | SHEET: 1 OF 1

DEC FORM NO. DRE 100

NOTES:

1. CONNECTORS P1 AND P2 ARE TO BE WIRED POINT TO POINT (P1-1 TO P2-1 P1-2 TO P2-2 ECT.)

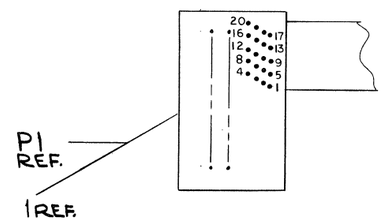

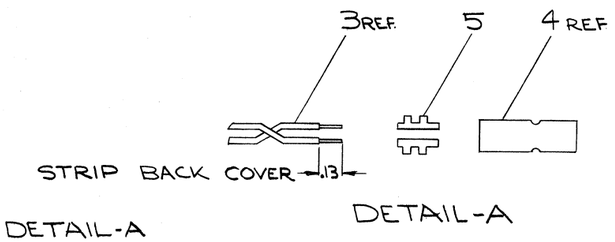

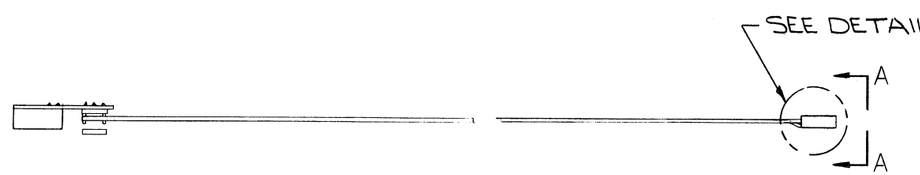

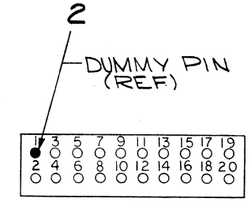

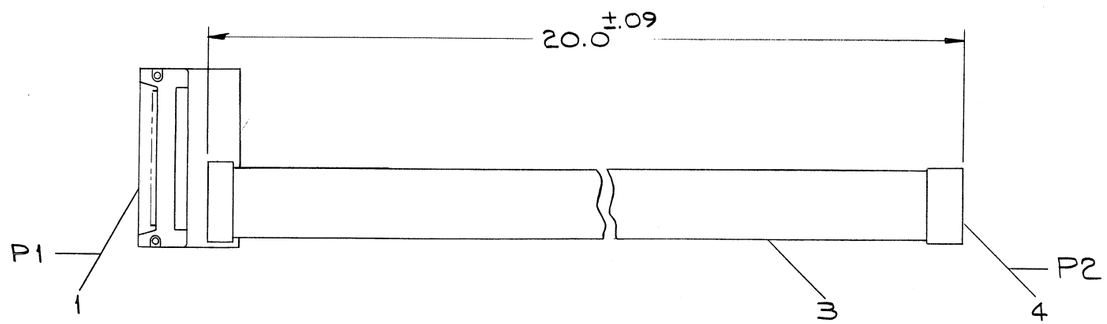

19	MINI-TERMINAL #47783 BERG	12100089-0	5
1	RECEPTACLE 20 PIN #65043-027 BERG	12100[illegible]027	4
A/R	CABLE SCOTCH FLEX #3350 3M	9107747	3
1	DUMMY PIN #47[illegible] BERG	9009[illegible]	2
1	DC. DISTRIBUTION MODULE	54099[illegible]-00	1
QTY.	DESCRIPTION		

PARTS LIST

FIRST USED ON OPTION/MODEL	
PDP 11Ø5	

UNLESS OTHERWISE SPECIFIED DIMENSION IN INCHES. TOLERANCES

DECIMALS	ANGLES
.XXX = .005	±0° 30'
.XX = .02	
.X = .1	

REMOVE BURRS AND BREAK SHARP CORNERS SURFACE QUALITY ✓

MATERIAL: SEE PARTS LIST

FINISH: —/—

DRN.		DATE 2-16-72
CHK.	C. Teschner	DATE 3-1-72
ENG.	David Di Maranville	DATE 3-24-72
PROJ. ENG.		DATE 3-24-72
PROD.	K K Peters	DATE 3-27-72

NEXT HIGHER ASSY.: D-UA-11Ø5-0-0

SCALE: NONE

SHEET 1 OF 1

DIGITAL EQUIPMENT CORPORATION MAYNARD MASSACHUSETTS

TITLE: HEADER CABLE ASSY

SIZE	CODE	NUMBER	REV.
D	IA	7008820-0-0	A

DIST. 6

REVISIONS			
CHANGE NO.	REV.		
7008820-00001	A		
CHK			

DEMORANVILLE 3-15-72

DEC FORM NO DRD 100-A

J1 BERG HEADER ON P.C. CARD	J2 20 PIN 3M CONNECTOR	SIGNAL	OUTPUT CABLE (REFERENCE)
VV	9-12	GROUND	GROUND (A)
UU	9-12	GROUND	GROUND (B)
B	9-12	GROUND	GROUND (UU)
A	9-12	GROUND	GROUND (VV)
RR	16	SERIAL IN (TTL)	E
NN	15	20 MA INTERLOCK	H
LL	14	SERIAL IN (+20MA)	K
DD	5	SERIAL IN (-20MA)	S
V	7	SERIAL OUT (+20MA)	AA
T	6	CLOCK IN (TTL)	CC
R	4	READER RUN (-20MA)	EE
N	3	CLOCK DISABLE (TTL)	HH
L	2	SERIAL OUT (-20MA)	KK
F	18	READER RUN (+20MA)	PP
D	19	SERIAL OUT (TTL)	SS
C	20	+5 VOLTS	TT
BB	8	+15 VOLTS	U

FIRST USED ON OPTION/MODEL	QTY.	DESCRIPTION	PART NO.	ITEM NO.
PDP-11/05		PARTS LIST		

UNLESS OTHERWISE SPECIFIED DIMENSION IN INCHES. TOLERANCES
DECIMALS .XXX ± .005 .XX ± .02 .X ± .1
ANGLES ± 0° 30'
REMOVE BURRS AND BREAK SHARP CORRECT SURFACE QUALITY

DRN. DATE 4-6-72
CHK'D. C. Teschner DATE 4-6-72
ENG. DATE 4-10-72
PROD. ENG. DATE 4-13-72
PROD. DATE 4/21/72
MATERIAL
FINISH
NEXT HIGHER ASSY. DXA-5409949-0-0
SCALE
SHEET 1 OF 1

digital EQUIPMENT CORPORATION MAYNARD, MASSACHUSETTS

TITLE
CIRCUIT SCHEMATIC

SIZE	CODE	NUMBER	REV.
C	CS	5409949-0-1	A

DIST.

REV. A
SIZE C CODE CS NUMBER 5409949-0-1

REVISIONS
CHK	CHANGE NO.	REV.

BRUNING 40-107 15968

DEC FORM NO. DRC 100-A

NOTES:

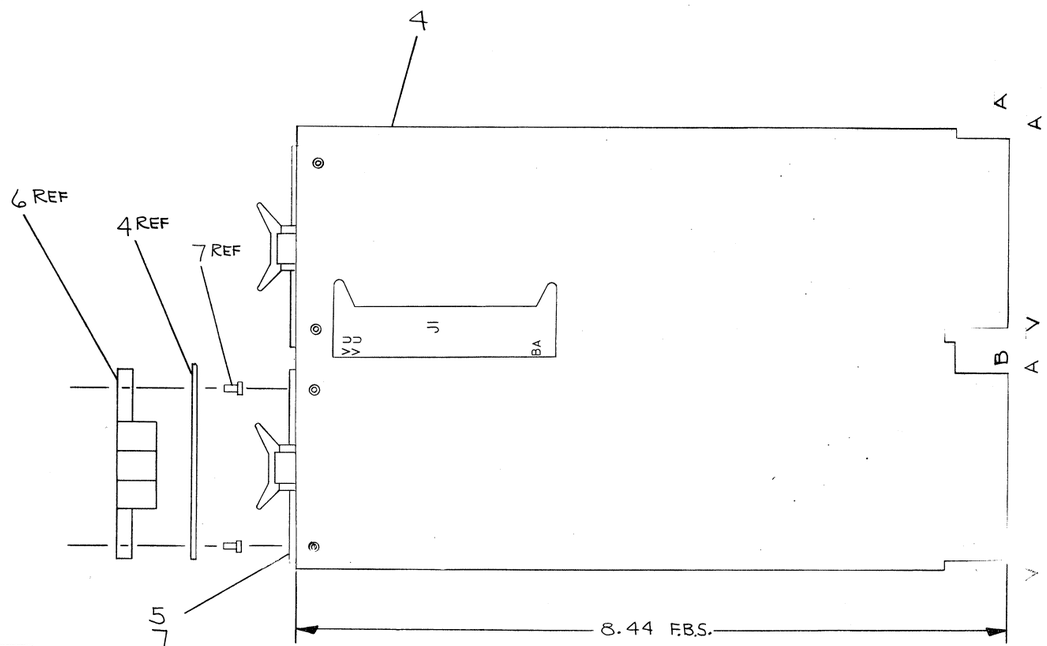

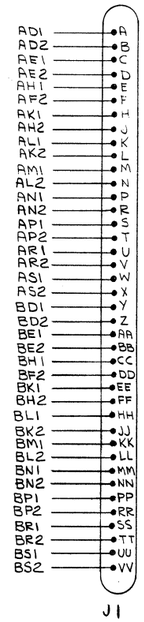

QTY	REF DESIGNATION	DESCRIPTION	PART NO.	ITEM NO.
REF		X-Y CO-ORDINATE HOLE LOCATION	K-CO-M9970-0-4	1
REF		ASSY/DRILLING HOLE LAYOUT	D-AH-M9970-0-5	2
REF		MODULE ECO HISTORY	B-MH-M9970-0-6	3
1		ETCHED CIRCUIT BOARD	5010347	4
1		BERG CONN, 40 PIN	1209941	5
2		HANDLE, FLIP-CHIP-MAGNETA	9008337-6	6
4		EYELET, HANDLE	9006732	7

PARTS LIST

ETCH BOARD REV A

FIRST USED ON OPTION MODEL: //

IC TYPE	GND	+ 5V
GND AND 5V ARE USUALLY PIN 7 AND 14 RESPECTIVELY EXCEPTIONS ARE STATED ABOVE		

IC PIN LOCATIONS

CHANGE NO.	REVISIONS	REV
DEC NO.	EIA NO.	DEC NO.	EIA NO.

SEMICONDUCTOR CONVERSION CHART

DRN. K. Lamb DATE 11-30-72
CHK'D L. Madden DATE 12-1-72
ENG. DATE 5-14-73
PROJ. ENG. DATE 5-14-73
PROD. DATE 5-14-73
NEXT HIGHER ASSY //
SCALE NONE
SHEET 1 OF 1

digital EQUIPMENT CORPORATION MAYNARD, MASSACHUSETTS

TITLE BERG BACKPLANE CONNECTOR

SIZE D CODE CS NUMBER M9970-0-1 REV. *

DIST.

REV * NUMBER M9970-0-1 SIZE D CODE CS

BRUNING 40-522 16699

DEC FORM NO. DRD-135A

WIRE TABLE

ITEM NO.	DESCRIPTION AWG	DESCRIPTION COLOR	PAIR NO.	FROM CONNECTION	FROM WITH	TO CONNECTION	TO WITH
3	22	BLK	1	P1-2	2	P2-KK	5
3		RED		P1-3	2	P2-S	
3,7		SHIELD		SEE NOTE #2	—	P2-A(NOTE #3)	
3		BLK	2	P1-4	2	P2-EE	
3		WHT		P1-5	2	P2-AA	
3,7		SHIELD		SEE NOTE #2	—	P2-UU(NOTE #3)	
3		BLK	3	P1-6	2	P2-PP	
3		GRN		P1-7	2	P2-K	
3,7		SHIELD		SEE NOTE #2	—	P2-VV(NOTE #3)	
6	22	BLK	—	P2-E	5	P2-H	5

NOTES:

1. * ASTERISKS INDICATE CAVITIES NOT USED OR DESIGNATED BY LETTERS.
2. DRAIN WIRES TO BE CUT BACK TO OUTER INSULATION ON P1 END OF CABLE ONLY. SHIELDS TO BE CUT BACK TO OUTER INSULATION ON BOTH ENDS OF CABLES.
3. DRAIN WIRES ON P2 END OF CABLE TO BE EACH ENCLOSED WITH ITEM #7 (TUBING) FROM END OF CABLE JACKET TO POINT WHERE THEY ENTER P2 CONNECTOR.
4. ITEM #6 (WIRE) TO BE APPROXIMATELY ONE (1) INCH LONG.
5. PLACE ITEM #9 ("THIS SIDE UP" STICKER) ON LETTERED SIDE OF ITEM #4 (BERG HOUSING) AS SHOWN.

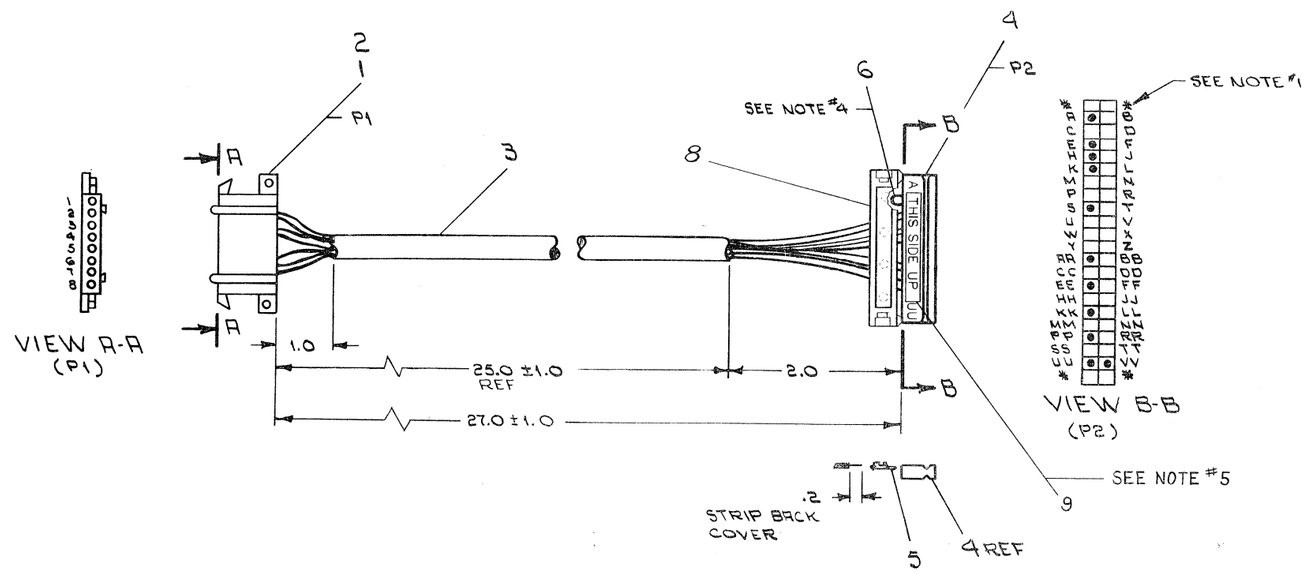

QTY.	DESCRIPTION	PART NO.	ITEM NO.
1	LABEL, THIS SIDE UP	3611567	9
1	STRAIN RELIEF	1211166	8
A/R	TUB. #18 TEF. THIN WALL NAT	9107278-11	7
A/R	WIRE, #22 AWG STRD TEF BLK	9107350-00	6
11	SOCKET, CRIMP # 47216	1210089-07	5
1	HOUSING, BERG # [illegible]	1210919-15	4
A/R	CABLE, BELDEN #8777-3PR SHLD	9107723-0	3
6	CONTACT MATE-N-LOCK (FEMALE)	1209379	2
1	CONN. MATE-N-LOCK (FEMALE)	1209340-00	1

PARTS LIST

REV.	CHANGE NO.	CHK.
A	K. SE-0002	
B	KL8E-00006	
C	7008360-0001	E. CLARK 3-15-73
D	7008360-0002	E. ALain 10-29-73

REVISIONS

FIRST USED ON OPTION/MODEL: PDP-8E

DO NOT SCALE DRAWING
UNLESS OTHERWISE SPECIFIED
DIMENSION IN INCHES
TOLERANCES
DECIMALS ± .005 FRACTIONS ± 1/64 ANGLES ± 0°30'
FINAL SURFACE QUALITY ✓
REMOVE BURRS AND BREAK SHARP CORNERS

MATERIAL: SEE PARTS LIST

FINISH: —

		DATE
DRN.	[illegible]	7/APR 71
CHK'D.	[illegible]	4-5-71
ENG.	[illegible]	4-5-71
PROJ. ENG.	[illegible]	4-5-71
PROD.	[illegible]	4-5-71

NEXT HIGHER ASSY: A-ML-KL8-E-0

SCALE: NONE

SHEET 1 OF 1

DIGITAL EQUIPMENT CORPORATION MAYNARD, MASSACHUSETTS

TITLE: CABLE ASSEMBLY (KL8E)

SIZE/CODE D | NUMBER 7008360-0-0 | REV D

DIST. | IA | 7008360-0-0 | D

FORM NO.

W130 PARTS REFERENCE

ITEM NO	DRAWING REFERENCE	DESCRIPTION	PART NUMBER	QUANTITY
1	R1,R3,R5,R7,R9,R11,R13,R15,R17,R19,R21,R23,	15K, 1/4W, 5% RES.	1300496	28
	R25,R27,R29,R31,R33,R35,R37,R39,R41,R43,			
	R45,R47,R49,R51,R53,R55			
2	R2,R4,R6,R8,R10,R12,R14,R16,R18,R20,R22,	470, 1/4W, 5% RES.	1300316	28
	R24,R26,R28,R30,R32,R34,R36,R38,R40,			
	R42,R44,R46,R48,R50,R52,R54,R56			
3	Q1-Q56	DEC 3009B TRANSISTOR	1503100	56
4	P1	H807 BLOCK, CONNECTOR	1209123	1

W131 PARTS REFERENCE

ITEM NO	DRAWING REFERENCE	DESCRIPTION	PART NUMBER	QUANTITY
1	E1	DEC 7400N I.C.	1905575	1
2	C1	.01 MFD, 100V, 20% DC CAP.	1001610	1
3	C2	6.8 MFD, 35V, 20% ST CAP.	1000067	1
4	R1,R2,R3,R4,R5	3K, 1/4W, 5% RES.	1300432	5
5	R6	330, 1/4W, 5% RES.	1300295	1
6	Q1	DEC 3009B TRANSISTOR	1503100	1
7	I1-I28	LAMP, HUDSON, BLUE *2309G	1209219	28
8	S1-S4	SWITCH, TOGGLE, SPST, 6ATI-T2	1201168	4

NOTES:

1. THE KM11 IS A TWO MODULE (W130, W131) OPTION TO THE KA11 TO AID MAINTENANCE. THIS PREWIRED OPTION IS INSTALLED BY INSERTING THE W130 MODULE INTO LOCATION B02 AND INSERTING THE W131 MODULE INTO THE W130. NOTE THAT THE SWITCHES AND LIGHTS FACE TOWARD AND EXTEND BELOW THE CONSOLE. THE BOTTON COVER MUST BE REMOVED WITH THE CHASSIS EXTERNAL TO THE CABINET.

2. LABELS FOR THE INTERNAL MACHINE STATES LAMPS ARE NOTED ON THE W131 ETCH BOARD. SWITCHES PROVIDE A MANUAL CLOCK AND BUS RESPONSE AND ARE ACTIVE WHEN THE TOGGLE IS TOWARD THE NAME. NORMAL MACHINE OPERATION REQUIRES THAT ALL SWITCHES BE IN THE OFF POSITION.

3. "M CLK ENABLE" AND "M CLK" PROVIDE A MANUAL CLOCK FOR THE KA11. "M CLK ENABLE" IS ACTIVATED WHILE THE PROCESSOR IS HALTED. EACH TOGGLE OF "M CLK" THEN STEPS THE PROCESSOR THROUGH THE SMALLEST PROCESSOR CLOCK INTERVALS, THE R/W STATES, THE NEXT HIGHEST CLOCK INTERVAL (S CLK) IS PROVIDED BY FOUR TOGGLES (2 COMPLETE SWITCH CYCLES) AND INDICATED BY THE R/W2 LAMP. R/W2 IS THE LAST (OR REST) R/W STATE IN A "S CLK" INTERVAL. NORMAL OPERATION IS RESUMED WHEN "M CLK" AND THEN "M CLK ENABLE" ARE RETURNED TO OFF.

4. "NO TIME OUT" AND "SSYN" PROVIDE A MANUAL BUS RESPONSE TO THE PROCESSOR. IT IS USED WHEN OTHER DEVICES ARE NOT AVAILABLE. "NO TIME OUT" IS ACTIVATED, WHILE THE PROCESSOR IS HALTED, TO ELIMINATE AN ERROR TRAP ON MANUAL "SSYN". AT THE APPROPRIATE TIMES IN A BUS TRANSFER "SSYN" IS ACTIVATED AND DEACTIVATED.

COMPONENT PLACEMENT

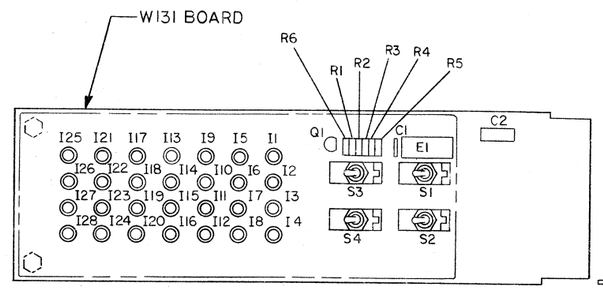

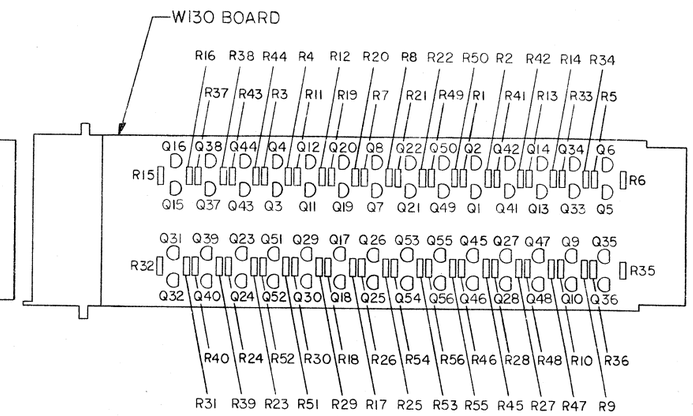

PIN NOMENCLATURE

MODULE	PROCESSOR
A	B

FIRST USED ON OPTION/MODEL
PDP11

DO NOT SCALE DRAWING
UNLESS OTHERWISE SPECIFIED
DIMENSION IN INCHES
TOLERANCES
DECIMALS ± .005 FRACTIONS ± 1/64 ANGLES ± 0°30'
FINAL SURFACE QUALITY
REMOVE BURRS AND BREAK SHARP CORNERS

MATERIAL —/—

FINISH —/—

QTY.	DESCRIPTION	PART NO.	ITEM NO.
	PARTS LIST		

DRN.		DATE 4-15-70
CHK'D.		DATE 4/29/70
ENG.		DATE 5/4/70
PROJ. ENG.		DATE 5/4/70
PROD.		DATE 5/5/70

NEXT HIGHER ASSY A-ML-KM11-0

SCALE 1/1

SHEET 1 OF 3

digital EQUIPMENT CORPORATION MAYNARD, MASSACHUSETTS

TITLE MAINTENANCE BOARD (1 & 2) KM-1

SIZE	CODE	NUMBER	REV.
D	BS	KM11-0-MB	

DIST.

REVISIONS: REV. / CHANGE NO. / CHK.

DEC FORM NO. DRD 100

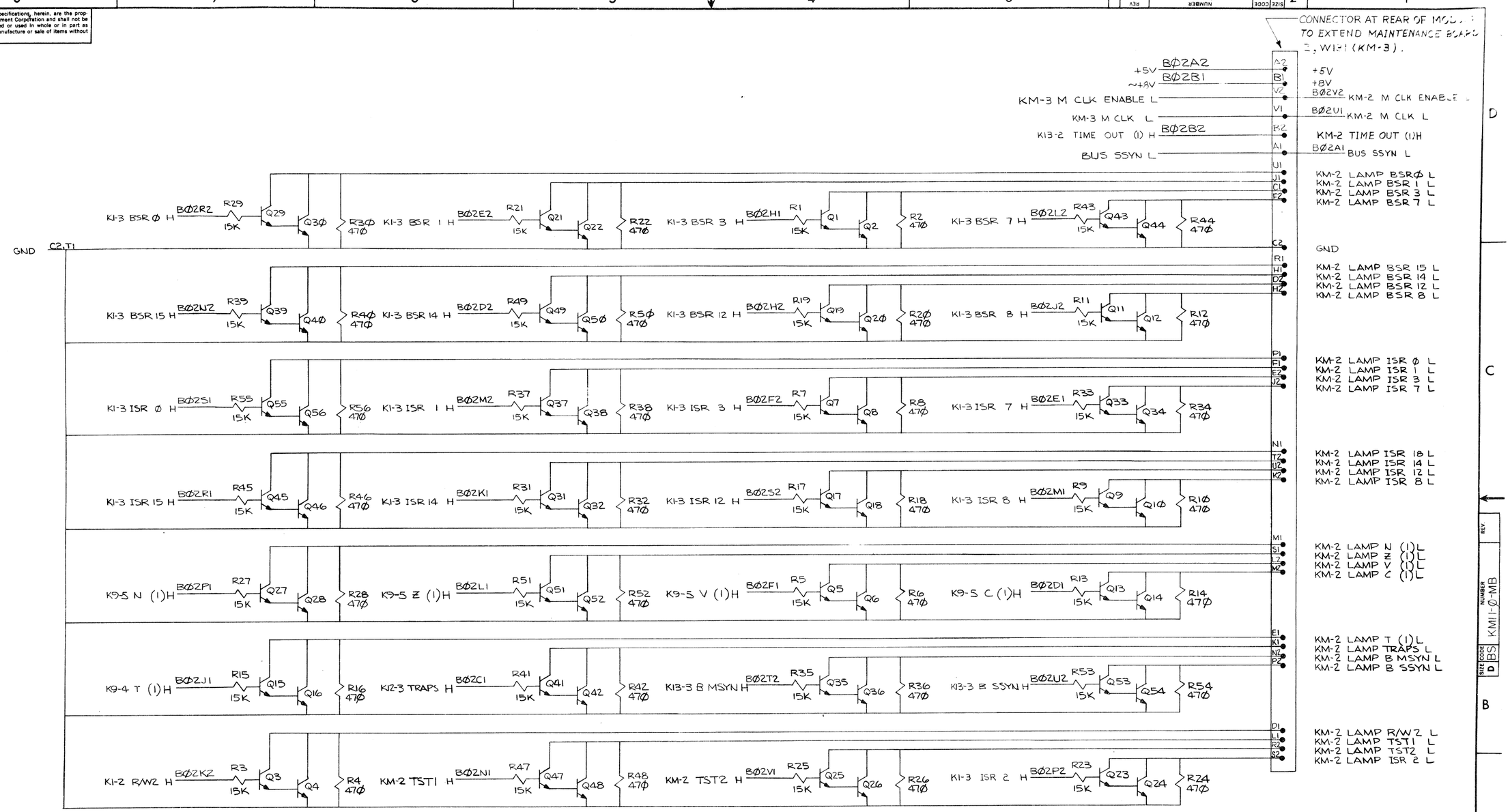

FIRST USED ON OPTION/MODEL	QTY.	DESCRIPTION	PART NO.	ITEM NO.
PDP 11		PARTS LIST		

UNLESS OTHERWISE SPECIFIED
UNLESS OTHERWISE SPECIFIED
DIMENSION IN INCHES
TOLERANCES
DECIMALS ± .005 FRACTIONS ± 1/64 ANGLES ± 0°30'
FINAL SURFACE QUALITY
REMOVE BURRS AND BREAK SHARP CORNERS

MATERIAL

FINISH

DRN.	DATE 12-18-69	digital EQUIPMENT CORPORATION MAYNARD, MASSACHUSETTS
CHK'D	DATE 4/11/70	TITLE MAINTENANCE BOARD
ENG.	DATE 3-6-74	
PROJ. ENG.	DATE	
PROD.	DATE	
NEXT HIGHER ASSY		W130 KM-2
SCALE NONE		SIZE CODE D NUMBER KM11-Ø-MB REV.
SHEET	OF	DIST.

REVISIONS: REV | CHANGE NO. | CHK

DEC FORM NO DEC 102A

SIZE D CODE BS NUMBER KM11-Ø-MB REV

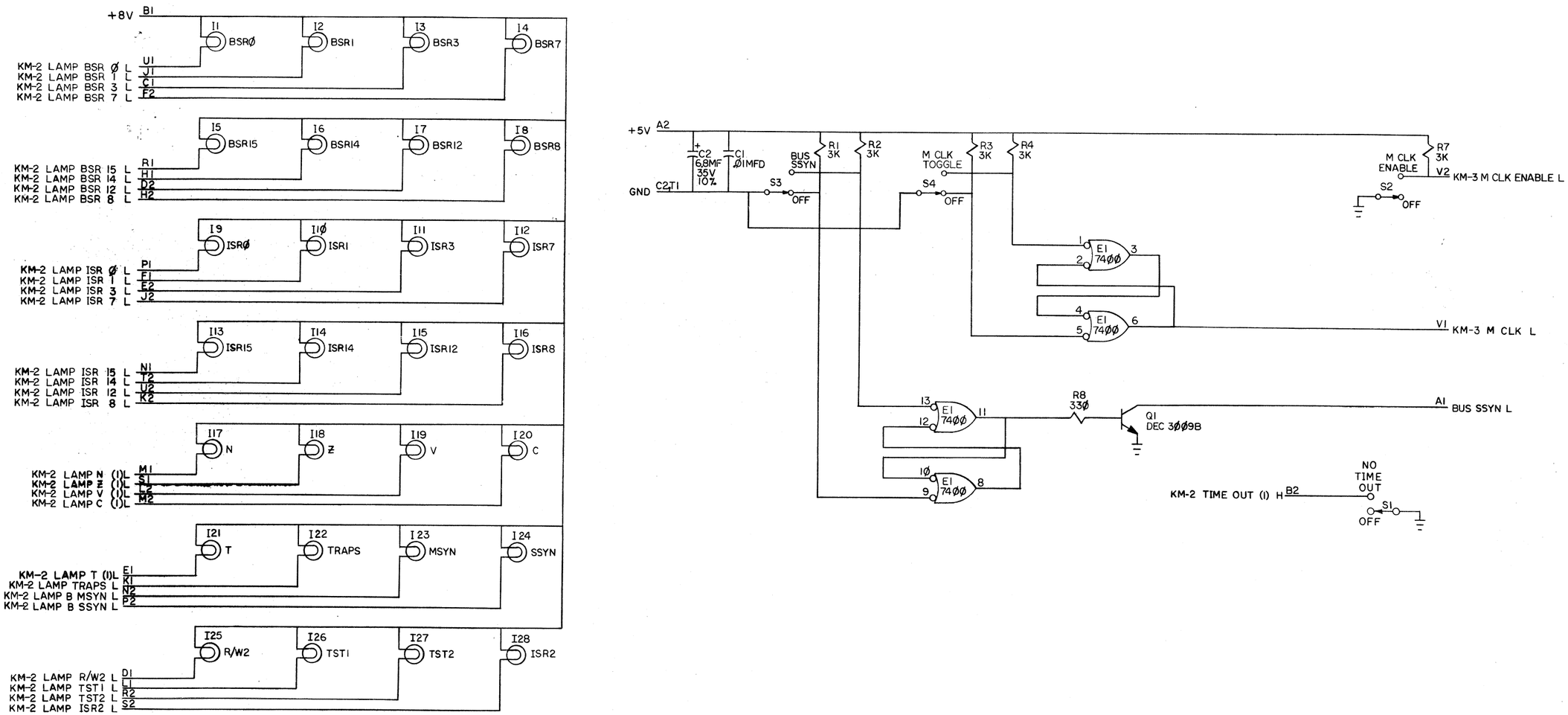

FIRST USED ON OPTION/MODEL	QTY.	DESCRIPTION	PART NO.	ITEM NO.
PDP 11		PARTS LIST		

UNLESS OTHERWISE SPECIFIED
UNLESS OTHERWISE SPECIFIED
DIMENSION IN INCHES
TOLERANCES
DECIMALS ± .005 FRACTIONS ± 1/64 ANGLES ± 0°30'
FINAL SURFACE QUALITY
REMOVE BURRS AND BREAK SHARP CORNERS

MATERIAL

FINISH

DRN. A. Rivers	DATE 12-17-69	
CHK'D	DATE 4/23/70	
ENG.	DATE 3-6-70	
PROJ. ENG.	DATE 3-6-70	
PROD.	DATE 5/5/70	

NEXT HIGHER ASSEMBLY A-ML-KM11-Ø

SCALE NONE

SHEET 3 OF 3

digital EQUIPMENT CORPORATION MAYNARD MASSACHUSETTS

TITLE MAINTENANCE BOARD(2)

W131 KM-3

SIZE D CODE BS NUMBER KM11-Ø-MB REV.

DIST.

REVISIONS | REV. | CHANGE NO. | CHK

DEC FORM 110. DRD 102A

MPC		AMUX				
3 D	7 D	3 B	7 B	11 B	15 B	BUT IR D
2 D	6 D	2 B	6 B	10 B	14 B	BBUSY D
1 D	5 D	1 B	5 B	9 B	13 B	SSYN D
0 D	4 D	0 B	4 B	8 B	12 B	MSYN D

D-DIM WHEN ASSERTED
B-BRIGHT WHEN ASSERTED

BUS SSYN →	AC LO →
M CLK PULSE →	M CLK EN →

KD11-B KM1

5509081-0-9

FIRST USED ON ORT 1/MOD
11/05

REVISIONS

REV.	CHANGE NO.	CHK

SPEC# 9200100-94 (BLACK)

DRN. D. Mattson	DATE 5-11-72
CHK'D.	DATE
ENG.	DATE
PROJ. ENG. S. Perlin	DATE 5-22-72
PROD. R.K. Peterson	DATE 5/24/72
NEXT HIGHER ASSY C-IA-5509081-0-0	
SCALE	
SHEET OF	

digital EQUIPMENT CORPORATION
MAYNARD, MASSACHUSETTS

TITLE
MAINT MODULE OVERLAY
(11/05 - KM1)

SIZE	CODE	NUMBER	REV.
A	55	5509081-0-9	

DIST.

MPC		SPAD	ALU			
3 D	7 D	03 B	S3 D	ALU M B	AUXC D	MSYN D
2 D	6 D	02 B	S2 D	CIN B	BUT JJ D	SSYN D
1 D	5 D	01 B	S1 D	EALU B	BUT UN D	C1 D
0 D	4 D	00 B	S0 D	SPWR B	CNST D	CO D

D-DIM WHEN ASSERTED
B-BRIGHT WHEN ASSERTED

BUS SSYN →	AC LO →
M CLK PULSE →	M CLK EN →

KD11-B KM2

5509081-0-10

FIRST USED ON OPT/MOD
11/05

REVISIONS

REV.	CHANGE NO.	CHK

SPEC# 9200160-94 (BLACK)

DRN. D. Mattson	DATE 5/1/72
CHK'D. Bu Sullivan	DATE
ENG.	DATE
PROJ. ENG. A. Teich	DATE 5-23-72
PROD. R W Peterson	DATE 5/24/72
NEXT HIGHER ASSY C-IA-5509081-0-0	
SCALE	
SHEET OF	

digital EQUIPMENT CORPORATION
MAYNARD, MASSACHUSETTS

TITLE
MAINT MODULE OVERLAY
(11/05 - KM2)

SIZE	CODE	NUMBER	REV.
A	SS	5509081-0-10	

DIST. G

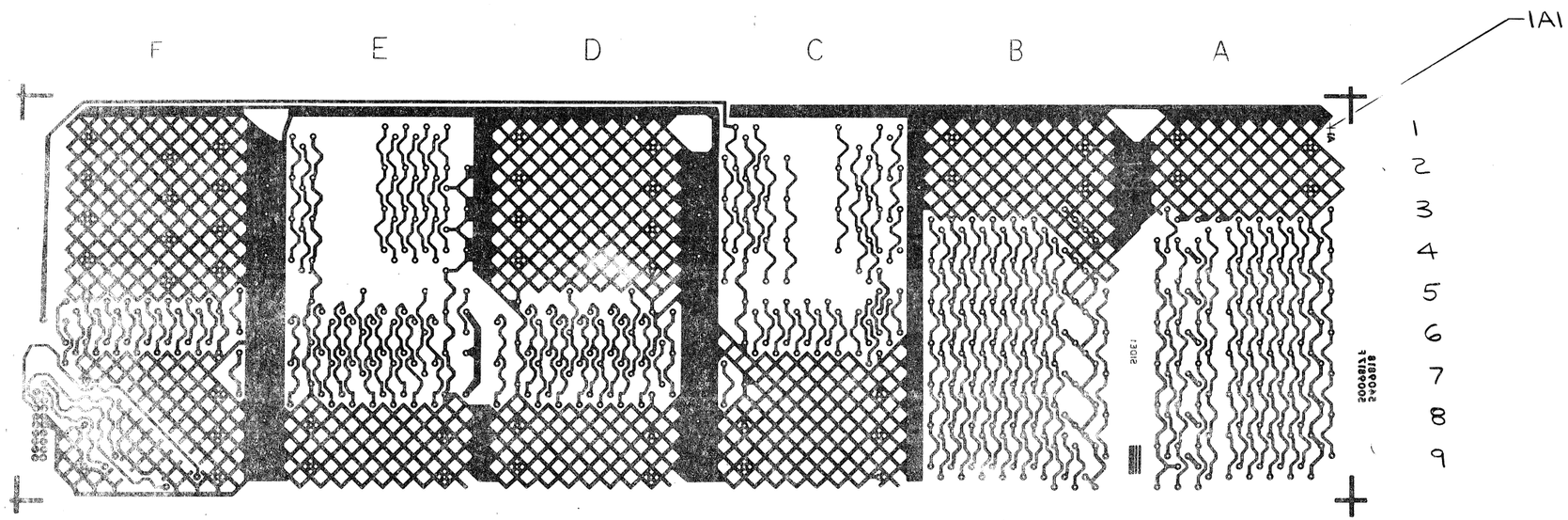

REVISIONS				
CHK	CHANGE NO.	REV.		
	5409818-00001	D	B. MINOR 5-7-72	
	5409818-00002	E	B. MINOR 5-29-72	
	5409818-00003	F	G. GRAHAM 2-13-73	
	5409818-00004	H	D. RANDALL 3/27/73	
	5409818-00005	J	G. GRAHAM 6-1-73	
			B. MINOR 11-15-73	
			B. MINOR 12-7-73	

USED ON NEXT HIGHER ASSY. DWG

FIRST USED ON	QTY.	DESCRIPTION	PART NO.	ITEM NO.
PDP-11Ø5		PARTS LIST		

UNLESS OTHERWISE SPECIFIED

UNLESS OTHERWISE SPECIFIED DIMENSION IN INCHES
TOLERANCES
DECIMALS ± .005 FRACTIONS ± 1/64 ANGLES ± 0°30'
FINAL SURFACE QUALITY ✓
REMOVE BURRS AND BREAK SHARP CORNERS

MATERIAL —/—/—

FINISH —/—/—

DRN. ROBICHAUD	DATE 3-20-72	digital EQUIPMENT CORPORATION MAYNARD MASSACHUSETTS
CHK'D C. TESCHNER	DATE 3-21-72	TITLE CIRCUIT SCHEMATIC (8K)
ENG. W. MINOR	DATE 3-21-72	
PROJ. ENG. B.D. WEEKS	DATE 3-21-72	
PROD. A.F. PETERSON	DATE 3-21-72	
FIRST USED ON NEXT HIGHER ASSY. C-IA-5409818-0-0		SIZE C CODE CS NUMBER 5409818-0-1 REV. J
SCALE 1/1		
SHEET 1 OF 2		DIST

SIZE C CODE CS NUMBER 5409818-0-1 REV. J

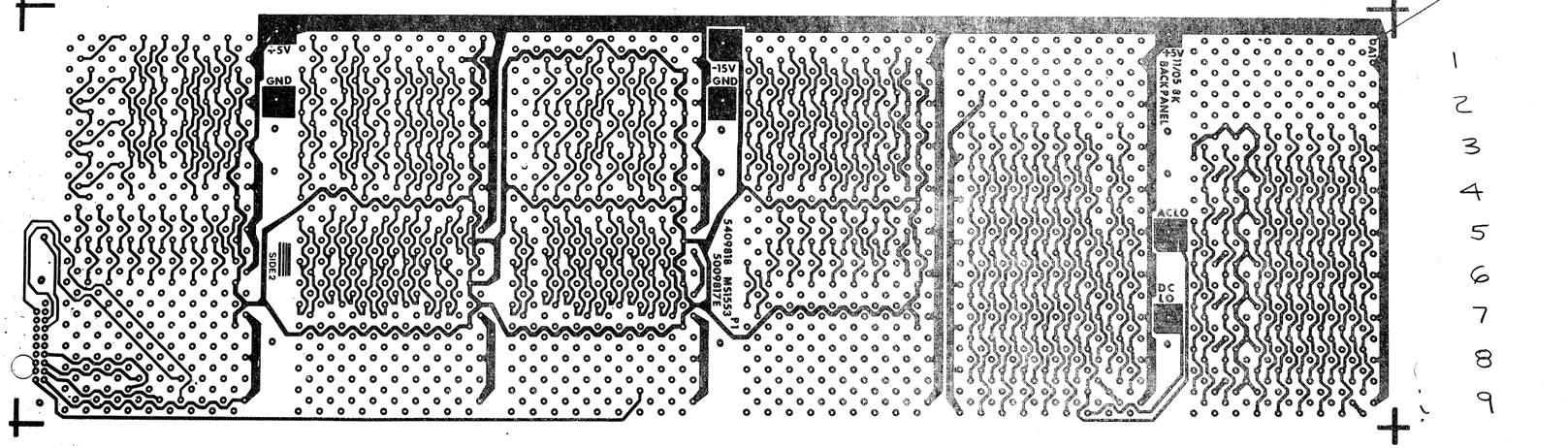

SOLDER SIDE-SIDE #2

FIRST USED ON	QTY.	DESCRIPTION	PART NO.	ITEM NO.
PDP-11Ø5		PARTS LIST		

UNLESS OTHERWISE SPECIFIED
DIMENSIONS IN INCHES
TOLERANCES
DECIMALS ± .005 FRACTIONS ± 1/64 ANGLES ± 0°30'
FINAL SURFACE QUALITY ✓
REMOVE BURRS AND BREAK SHARP CORNERS

MATERIAL —/—/—

FINISH —/—/—

DRN.	ROBICHAUD	DATE 3-20-72
CHK'D	C. TESCHNER	DATE 3-21-72
ENG.	W. MINOR	DATE 3-21-72
PROJ. ENG.	B.D. WEEKS	DATE 3-21-72
PROD.	D.K. PETERSON	DATE 3-21-72

FIRST USED ON NEXT HIGHER ASSY.
CTA-5409818-0-0
SCALE 1/1
SHEET 2 OF 2

digital EQUIPMENT CORPORATION
MAYNARD, MASSACHUSETTS

TITLE
CIRCUIT
SCHEMATIC (8K)

SIZE	CODE	NUMBER	REV.
C	CS	5409818-0-1	J

DIST

REVISIONS
REV.
CHANGE NO.
CHK

DEC FORM NO. DRC

SIZE C CODE CS NUMBER 5409818-0-1 REV. J

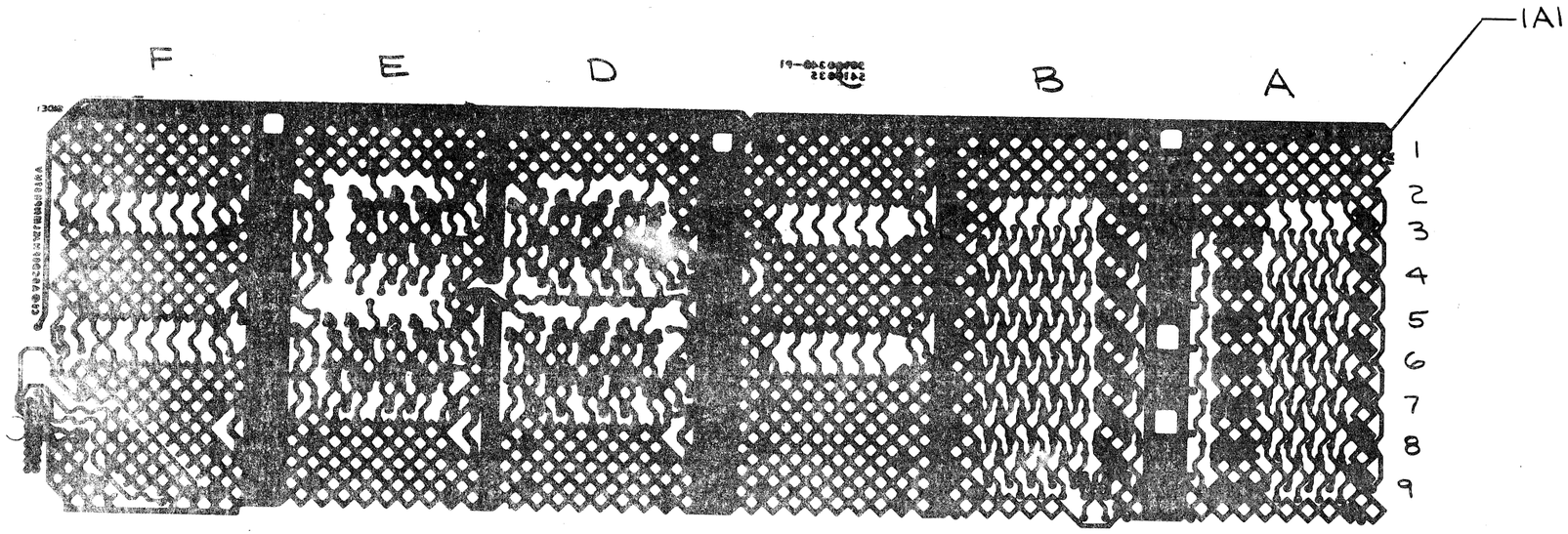

BLOCK SIDE
(SIDE #1)
— AS SEEN THRU SIDE #2 —

REVISIONS				
CHK	CHANGE NO.			REV.
	5410035-00001	G. GRAHAM	2/1/73	B
	5410035-00002	G. GRAHAM	2-12-73	C
	5410035-00003	D. RANDALL	3/9/73	D
	5410035-00004	G. GRAHAM	5-2-73	E
	5410035-00005	D. RANDALL	7/11/73	F
		B. MINOR	11-15-73	
			11-21-73	

FIRST USED ON OPTION/MODEL	QTY	DESCRIPTION	PART NO	ITEM NO
PDP-11/05		PARTS LIST		

UNLESS OTHERWISE SPECIFIED
DIMENSIONS IN INCHES
TOLERANCES
DECIMALS ± .005 FRACTIONS ± 1/64 ANGLES ± 0°30'
FINAL SURFACE QUALITY ✓
REMOVE BURRS AND BREAK SHARP CORNERS

MATERIAL

FINISH

DRN		DATE 5-11-72
CHK'D	C. Teschner	DATE 5-11-72
ENG		DATE 5-11-72
PROJ. ENG		DATE 5-12-72
		DATE 5/15/72

NEXT HIGHER ASSY.
C-IA5410035-0

SCALE 1/1
SHEET 1 OF 2

digital EQUIPMENT CORPORATION
MAYNARD, MASSACHUSETTS

TITLE
CIRCUIT
SCHEMATIC (16K)

SIZE	CODE	NUMBER	REV.
C	CS	5410035-0-1	F

DIST

DEC FORM 1013

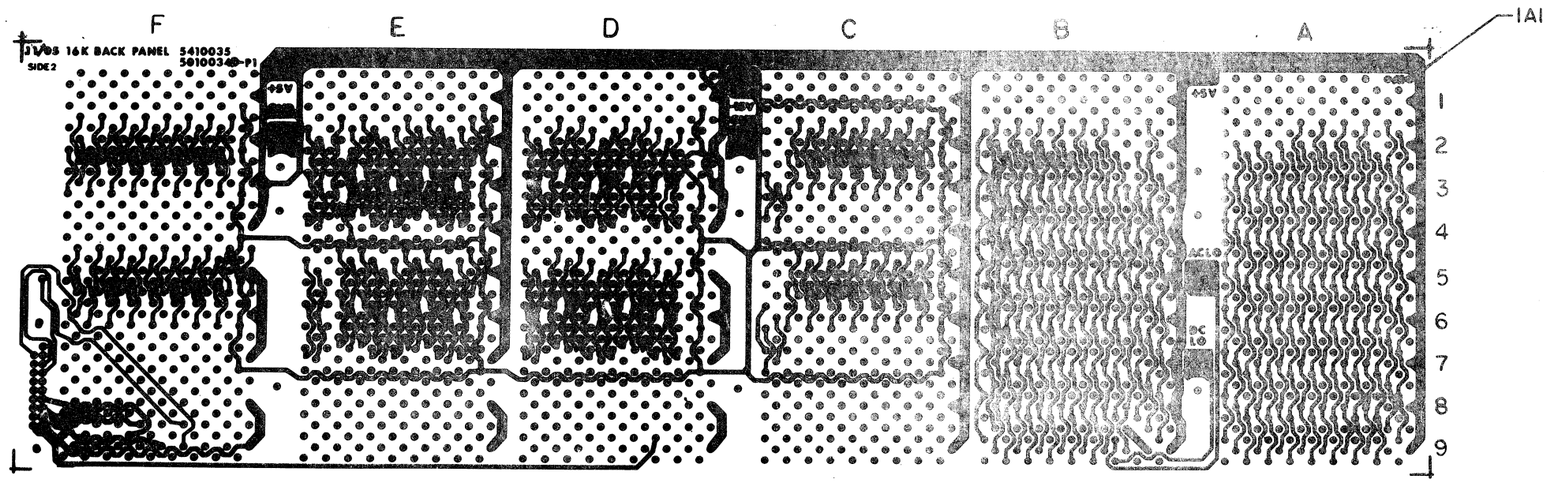

SOLDER SIDE
(SIDE 2)

FIRST USED ON OPTION/MODEL	QTY	DESCRIPTION	PART NO	ITEM NO
PDP11/05		PARTS LIST		

UNLESS OTHERWISE SPECIFIED

UNLESS OTHERWISE SPECIFIED
DIMENSIONS IN INCHES
TOLERANCES
DECIMALS ± .005 FRACTIONS ± 1/64 ANGLES ± 0°30'
FINISH SURFACE QUALITY
REMOVE BURRS AND BREAK SHARP CORNERS

MATERIAL

FINISH

DRN. R. Cook DATE 5/11/72
CHK'D. DATE 5-11-72
DATE 5-11-72
DATE 5-11-72
DATE 5/11/72
DATE 5/11/72

NEXT DIMENSION ASSY
C-U-5410035-0-0
SCALE
SHEET 2 OF 2

digital EQUIPMENT CORPORATION

TITLE
CIRCUIT SCHEMATIC (16 K)

SIZE	CODE	NUMBER	REV.
C	CS	5410035-0-1	F

DIST

REVISIONS

REV.	CHANGE NO.	CHK

DEC FORM NO. DRC

CS5410035-0-1 REV F

NOTES:

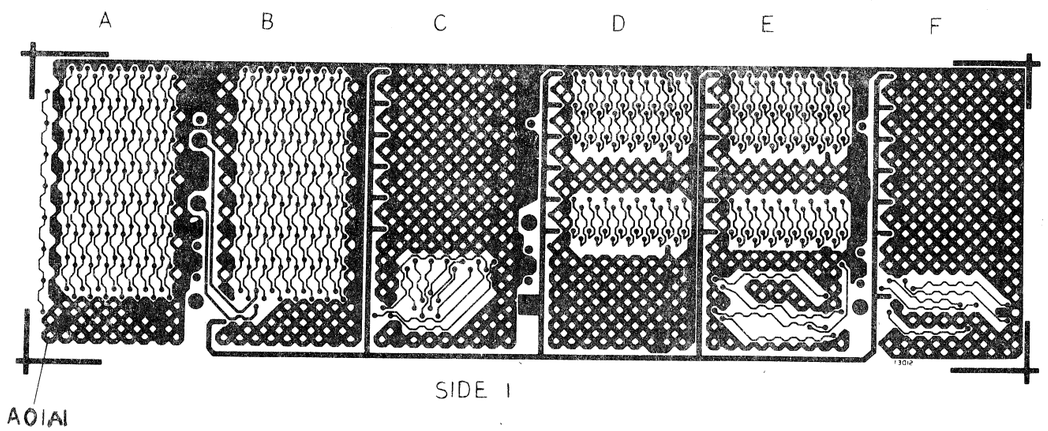

SIDE 1

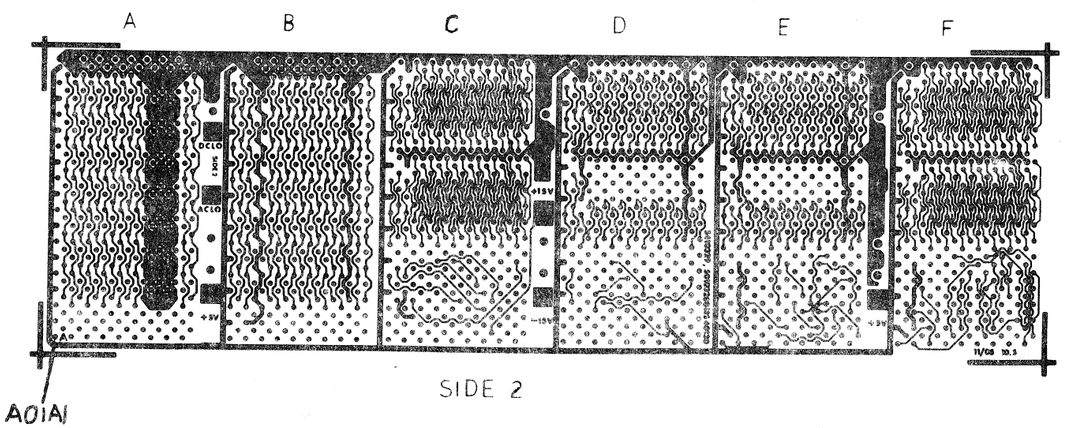

SIDE 2

REF				
		ETCH WIRE LIST	FINAL 15-7-B	5
1		ETCHED CIRCUIT BOARD	5010328	4
REF		MODULE ECO HISTORY	B-MH-5410328-0-0	3
REF		ASSY/DRILLING HOLE LAYOUT	E-AH-5410328-0-5	2
REF		X-Y COORDINATE HOLE LOCATION	K-CO-5410328-0-0	1
QTY	REF DESIGNATION	DESCRIPTION	PART NO	ITEM NO

PARTS LIST

FIRST USED ON OPTION MODEL: 1105

ETCH BOARD REV: B

IC TYPE	GND	+ 5V
GND AND 5V ARE USUALLY PIN 7 AND 14 RESPECTIVELY EXCEPTIONS ARE STATED ABOVE		

IC PIN LOCATIONS

CHANGE NO	REV	DEC NO	EIA NO	DEC NO	EIA NO

REVISIONS

SEMICONDUCTOR CONVERSION CHART

DRN L. Wilson DATE 3/3/73
CHECKED DATE 7-24-73
ENGR DATE 7-27-73
PROJ ENGR DATE 7-31-73
PRODUCT ENGR DATE 8-13-73

NEXT HIGHER ASSY: IA-7309241-0-0
SCALE: NONE
SHEET 1 OF 1

digital EQUIPMENT CORPORATION MAYNARD, MASSACHUSETTS

TITLE: CIRCUIT SCHEMATIC (1105 10.5)

SIZE D CODE CS NUMBER 5410329-0-1 REV. A

DIST.

SIZE D CODE CS NUMBER 5410329-0-0 REV.