ATLAS / COLT

Schematics

Publ. No.: 3 9600-02/A
December 1984

Published by

Postfach 1467
D-6057 Dietzenbach

Tel. (06074) 4002-0
Telex 4191550 dli d
Telefax (06074) 400224

Technical Support
Tel. (06074) 400260/52/40

Technical Documentation
Tel. (06074) 400236

Service Department
Tel. (06074) 32255

Subject to technical alterations in the course of further development.
All rights reserved.

List of Terms and Abbreviations Used in the Parts Lists

Abstandsscheiben für Transist.	transistor spacers
als Ersatztyp keinesfalls ...	Do not use xxx as a replacement
Anz(ahl)	quantity
Auswerfer	ejector
Codierung	coding (pin, tab)
Codierkeil, Codiernase	coding tab
DA-Wandler	D/A converter
Drehko Trimmer	trimmer capacitor
dunkelgrau	darkgray
einstellbar	adjustable
Elko	electrolytic capacitor
Ersatztyp	replacement type
Flachkabel	flat cable
für	for
ger(ade)	straight
grün	green
gew(inkelt)	angular
Hohlniet	rivet
Kabelbinder	cable binder
Ker.	ceramic (capacitor)
klein	small
Knebelschalter	bar switch
Koaxkabel	coaxial cable
Kondensator	capacitor
Kreuzschlitzsenkschraube	Phillips screw, countersunk
Leiterplatte	printed circuit board
Leiterplattenverbinder	p.c.board connector
Li-Batterie	Lithium battery
liegend	flat mounted
links	left
loetbar	solderable
mehr als 10 Umdrehungen	more than 10 turns (trimpot)
Mehrgang	multi-turn (trimpot)
Mini-Koaxbuchse	miniature coaxial jack
mit	with
Netzwerk	network
nur	only
oben	up
oder	or

Pfeil	arrow
Pfostenverbinder	pin connector
Plazierung	location
präz.	precision
Printbuchse	p.c.b. socket
Quarz	crystal
R-Netzwerk	resistor network
right	right
rechteckig	rectangular
Relais	relay
Rev.	revision
rot	red
schmal	narrow
Schrauben, x-schl., senk.	screws, Phillips, countersunk
schwarz	black
Seite	page
Sockel	socket
Spindeltrimmer	helical trimpot
Spule	coil, inductor
stehend	upright, vertically mounted
Stiftleiste	pin connector
Stiftsockel	connector, female
Tan(tal)	tantalum electrolytic capacitor
Taste	push-button cap
Transistorverbindungsblech	common heatsink plate
v(on) oben	from top
VG-Federl(eiste)	multipole connector, female
VG-Messerleiste	multipole connector, blade contacts
Vielschicht	multilayer (capacitor)
Vs	multilayer
unten	down, bottom
Widerstand	resistor
Winkelgerätestecker	angular connector
Zugriffszeit	access time
4-fach	quadruple

ATLAS SERVICE MANUAL INDEX

MOTHERBOARD															ORG. FORMAT				MAN	
5 2100-04 A1	A	B	C	D	E	F	G	H	I	J	K	L	M	N	A1	A2	A3	A4	A3	A4
SCHEMATIC																				
ASSY DRWG	X																1	1		2
PINOUTS	X																	1		1
BLOCKDIAGRAMM																				

MPM PROCESSOR															ORG. FORMAT				MAN	
5 2000-01	A	B	C	D	E	F	G	H	I	J	K	L	M	N	A1	A2	A3	A4	A3	A4
SCHEMATIC								X									4			4
ASSY DRWG								X									1	4		5
PINOUTS																				
BLOCKDIAGRAMM																				

LA PROCESSOR															ORG. FORMAT				MAN	
5 2000-02 A1/A2	A	B	C	D	E	F	G	H	I	J	K	L	M	N	A1	A2	A3	A4	A3	A4
SCHEMATIC						X											3			3
ASSY DRWG						X											2	8		10
PINOUTS																				
BLOCKDIAGRAMM																				

DISPLAYSYSTEM															ORG.FORMAT				MAN	
5 2000-06	A	B	C	D	E	F	G	H	I	J	K	L	M	N	A1	A2	A3	A4	A3	A4
SCHEMATIC						X											4			4
ASSY DRWG						X											1	4		5
PINOUTS																				
BLOCKDIAGRAMM																				

LINKBOARD															ORG.FORMAT				MAN	
5 2000-09	A	B	C	D	E	F	G	H	I	J	K	L	M	N	A1	A2	A3	A4	A3	A4
SCHEMATIC							X										9			9
ASSY DRWG							X										1	4		5
PINOUTS																				
BLOCKDIAGRAMM																				

INTERFACE BOARD															ORG.FORMAT				MAN	
5 2000-10	A	B	C	D	E	F	G	H	I	J	K	L	M	N	A1	A2	A3	A4	A3	A4
SCHEMATIC						X											5			5
ASSY DRWG						X											1	4		5
PINOUTS																				
BLOCKDIAGRAMM																				

ATLAS SERVICE MANUAL INDEX

SOFTKEYBOARD															ORG. FORMAT				MAN	
5 2000-05	A	B	C	D	E	F	G	H	I	J	K	L	M	N	A1	A2	A3	A4	A3	A4
SCHEMATIC																				
ASSY DRWG				X														2		2
PINOUTS																				
BLOCKDIAGRAMM																				

AC BOARD															ORG. FORMAT				MAN	
5 2000-07	A	B	C	D	E	F	G	H	I	J	K	L	M	N	A1	A2	A3	A4	A3	A4
SCHEMATIC																				
ASSY DRWG		X																2		2
PINOUTS																				
BLOCKDIAGRAMM																				

															ORG. FORMAT				MAN	
	A	B	C	D	E	F	G	H	I	J	K	L	M	N	A1	A2	A3	A4	A3	A4
SCHEMATIC																				
ASSY DRWG																				
PINOUTS																				
BLOCKDIAGRAMM																				

LEC BOARD															ORG.FORMAT				MAN	
5 2000-11	A	B	C	D	E	F	G	H	I	J	K	L	M	N	A1	A2	A3	A4	A3	A4
SCHEMATIC																				
ASSY DRWG																		2		2
PINOUTS																				
BLOCKDIAGRAMM																				

LED BOARD															ORG.FORMAT				MAN	
5 2000-12	A	B	C	D	E	F	G	H	I	J	K	L	M	N	A1	A2	A3	A4	A3	A4
SCHEMATIC																				
ASSY DRWG																		2		2
PINOUTS																				
BLOCKDIAGRAMM																				

VIDEO BOARD															ORG.FORMAT				MAN	
5 2000-13	A	B	C	D	E	F	G	H	I	J	K	L	M	N	A1	A2	A3	A4	A3	A4
SCHEMATIC																		1		1
ASSY DRWG																		2		2
PINOUTS																				
BLOCKDIAGRAMM																				

ATLAS SERVICE MANUAL INDEX

															ORG. FORMAT				MAN	
	A	B	C	D	E	F	G	H	I	J	K	L	M	N	A1	A2	A3	A4	A3	A4
SCHEMATIC																				
ASSY DRWG																				
PINOUTS																				
BLOCKDIAGRAMM																				

															ORG. FORMAT				MAN	
	A	B	C	D	E	F	G	H	I	J	K	L	M	N	A1	A2	A3	A4	A3	A4
SCHEMATIC																				
ASSY DRWG																				
PINOUTS																				
BLOCKDIAGRAMM																				

INTERCONNECTION BOARD															ORG. FORMAT				MAN	
5 2001-02 A1	A	B	C	D	E	F	G	H	I	J	K	L	M	N	A1	A2	A3	A4	A3	A4
SCHEMATIC																				
ASSY DRWG			X															3		3
PINOUTS																				
BLOCKDIAGRAMM																				

KEYBOARD															ORG.FORMAT				MAN	
5 2000 -04	A	B	C	D	E	F	G	H	I	J	K	L	M	N	A1	A2	A3	A4	A3	A4
SCHEMATIC						X											2			2
ASSY DRWG						X											1	4		5
PINOUTS																				
BLOCKDIAGRAMM																				

															ORG.FORMAT				MAN	
	A	B	C	D	E	F	G	H	I	J	K	L	M	N	A1	A2	A3	A4	A3	A4
SCHEMATIC																				
ASSY DRWG																				
PINOUTS																				
BLOCKDIAGRAMM																				

															ORG.FORMAT				MAN	
	A	B	C	D	E	F	G	H	I	J	K	L	M	N	A1	A2	A3	A4	A3	A4
SCHEMATIC																				
ASSY DRWG																				
PINOUTS																				
BLOCKDIAGRAMM																				

COLT SERVICE MANUAL INDEX

MOTHERBOARD															ORG. FORMAT				MAN	
5 2100-04 A2	A	B	C	D	E	F	G	H	I	J	K	L	M	N	A1	A2	A3	A4	A3	A4
SCHEMATIC																				
ASSY DRWG	X																1	1		2
PINOUTS	X																	1		1
BLOCKDIAGRAMM																				

MPM PROCESSOR															ORG. FORMAT				MAN	
5 2000-01	A	B	C	D	E	F	G	H	I	J	K	L	M	N	A1	A2	A3	A4	A3	A4
SCHEMATIC								X									4			4
ASSY DRWG								X									1	4		5
PINOUTS																				
BLOCKDIAGRAMM																				

LA PROCESSOR															ORG. FORMAT				MAN	
5 2000-02 A1	A	B	C	D	E	F	G	H	I	J	K	L	M	N	A1	A2	A3	A4	A3	A4
SCHEMATIC						X											3			3
ASSY DRWG						X											1	4		5
PINOUTS																				
BLOCKDIAGRAMM																				

DISPLAYSYSTEM															ORG.FORMAT				MAN	
5 2000-06	A	B	C	D	E	F	G	H	I	J	K	L	M	N	A1	A2	A3	A4	A3	A4
SCHEMATIC						X											4			4
ASSY DRWG						X											1	4		5
PINOUTS																				
BLOCKDIAGRAMM																				

LINKBOARD															ORG.FORMAT				MAN	
5 2000-09	A	B	C	D	E	F	G	H	I	J	K	L	M	N	A1	A2	A3	A4	A3	A4
SCHEMATIC							X										9			9
ASSY DRWG							X										1	4		5
PINOUTS																				
BLOCKDIAGRAMM																				

INTERFACE BOARD															ORG.FORMAT				MAN	
5 2000-10	A	B	C	D	E	F	G	H	I	J	K	L	M	N	A1	A2	A3	A4	A3	A4
SCHEMATIC						X											5			5
ASSY DRWG						X											1	4		5
PINOUTS																				
BLOCKDIAGRAMM																				

COLT SERVICE MANUAL INDEX

															ORG. FORMAT				MAN	
	A	B	C	D	E	F	G	H	I	J	K	L	M	N	A1	A2	A3	A4	A3	A4
SCHEMATIC																				
ASSY DRWG																				
PINOUTS																				
BLOCKDIAGRAMM																				

AC BOARD															ORG. FORMAT				MAN	
5 2000-07	A	B	C	D	E	F	G	H	I	J	K	L	M	N	A1	A2	A3	A4	A3	A4
SCHEMATIC																				
ASSY DRWG		X																2		2
PINOUTS																				
BLOCKDIAGRAMM																				

DC BOARD															ORG. FORMAT				MAN	
5 2000-08	A	B	C	D	E	F	G	H	I	J	K	L	M	N	A1	A2	A3	A4	A3	A4
SCHEMATIC																				
ASSY DRWG			X															2		2
PINOUTS																				
BLOCKDIAGRAMM																				

LEC BOARD															ORG.FORMAT				MAN	
5 2000-11	A	B	C	D	E	F	G	H	I	J	K	L	M	N	A1	A2	A3	A4	A3	A4
SCHEMATIC																				
ASSY DRWG																		2		2
PINOUTS																				
BLOCKDIAGRAMM																				

															ORG.FORMAT				MAN	
	A	B	C	D	E	F	G	H	I	J	K	L	M	N	A1	A2	A3	A4	A3	A4
SCHEMATIC																				
ASSY DRWG																				
PINOUTS																				
BLOCKDIAGRAMM																				

VIDEO BOARD															ORG.FORMAT				MAN	
5 2000-13	A	B	C	D	E	F	G	H	I	J	K	L	M	N	A1	A2	A3	A4	A3	A4
SCHEMATIC																		1		1
ASSY DRWG																		2		2
PINOUTS																				
BLOCKDIAGRAMM																				

COLT SERVICE MANUAL INDEX

															ORG. FORMAT				MAN	
	A	B	C	D	E	F	G	H	I	J	K	L	M	N	A1	A2	A3	A4	A3	A4
SCHEMATIC																				
ASSY DRWG																				
PINOUTS																				
BLOCKDIAGRAMM																				

															ORG. FORMAT				MAN	
	A	B	C	D	E	F	G	H	I	J	K	L	M	N	A1	A2	A3	A4	A3	A4
SCHEMATIC																				
ASSY DRWG																				
PINOUTS																				
BLOCKDIAGRAMM																				

INTERCONNECTION BOARD															ORG. FORMAT				MAN	
5 2001-02 A1	A	B	C	D	E	F	G	H	I	J	K	L	M	N	A1	A2	A3	A4	A3	A4
SCHEMATIC																				
ASSY DRWG			X															3		3
PINOUTS																				
BLOCKDIAGRAMM																				

															ORG.FORMAT				MAN	
	A	B	C	D	E	F	G	H	I	J	K	L	M	N	A1	A2	A3	A4	A3	A4
SCHEMATIC																				
ASSY DRWG																				
PINOUTS																				
BLOCKDIAGRAMM																				

KEYBOARD															ORG.FORMAT				MAN	
5 2100-01	A	B	C	D	E	F	G	H	I	J	K	L	M	N	A1	A2	A3	A4	A3	A4
SCHEMATIC																				
ASSY DRWG		X																3		3
PINOUTS																				
BLOCKDIAGRAMM																				

KEYLOGIC															ORG.FORMAT				MAN	
5 2100-02	A	B	C	D	E	F	G	H	I	J	K	L	M	N	A1	A2	A3	A4	A3	A4
SCHEMATIC	X																1			1
ASSY DRWG	X																	3		3
PINOUTS																				
BLOCKDIAGRAMM																				

QTY	DLI PART NO.	DESCRIPTION	DESIGNATION
1		74 S 00	D6
1		74 S 02	C11
1		74 S 32	C12
1		74 S 74	E1
1		74 S 64	D15
1		74 S 132	D17
2		74 S 158	A12, A13
1		74 LS 00	D2
2		74 LS 02	C10, D16
1		74 LS 04	C8
1		74 LS 20	A11
1		74 LS 27	E10
8		74 LS 32	C3, C6, C9, D7, E13, E14, E18, E19
3		74 LS 74	D5, D10, A3
1		74 LS 122	C5
1		74 LS 123	D1
2		74 LS 125	D4, D14
1		74 LS 132	E9
1		74 LS 138	C7
1		74 LS 148	E20
1		74 LS 175	D3
4		74 LS 224	D8, D9, D11, D12
6		74 LS 244	A2, A5, A6, C4, E6, E7
5		74 LS 245	E3, E4, E5, E8, E21
1		74 LS 273	E11
1		74 LS 365	E15
1		74 LS 367	D13
1		74 LS 368	E2
1		74 LS 374	E17
2		74 LS 465	E12, E16
1		FDC 2797-02	A1
1		Z 80 A CPU	A4

CODE	ERN	DATE	REVISIONS	NAME	DATE
H	605	13.8.84			
G	460	31.1.84			
G	320	22.6.83			

CHECK
DRAWN 16.3.84 Th. Dolch

DOLCH LOGIC INSTRUMENTS

PART LIST
ATLAS MP/M-PROCESSOR

PART NUMBER	SHEET
5 2000-01	1/4

QTY	DLI PART NO.	DESCRIPTION	DESIGNATION
3		7611	A7, A8, A10
32		8264-20 oder 4864 (facc-250ns)	A14-21, B2-9, C13-20, D18-25
1		2732A - 20	A9
2		7406	C1, C2
1		MPS 3640	Q1
3		1 N 4148	CR1, CR2, CR3
1		Quarz 4 MHz	Y1
2		TURN POT 1K	R1, R2
2		SIL 4 x 1K 5 pol.	R3, R4
6		SIL 4 x 22 Ω 8 pol.	R5, R6, R13, R14, R26, R28
2		SIL 8 x 1K 9 pol.	R25, R10
1		SIL 8 x 150 Ω 9 pol.	R30
1		SIL 4 x 220 Ω 8 pol.	R31
1		22 Ω	R21
1		120 Ω	R33
2		220 Ω	R18, R19
1		150 Ω	R27
1		270 Ω	R20
2		470 Ω	R23, R24
1		1K	R29
1		1K2	R22
2		1K5	R7, R34
2		4K7	R11, R16
3		10K	R8, R9, R12
2		47K	R15, R32
1	52000-01	Platine Atlas MP/M Proc.	Rev. G

CODE	ERN	DATE	REVISIONS	NAME	DATE
H	605	13.8.84			
G	460	31.1.84			
G	320	22.6.83			

CHECK

DRAWN 16.7.84 Tschumy

DOLCH LOGIC INSTRUMENTS

PART LIST
ATLAS MP/M-PROCESSOR

PART NUMBER	SHEET
52000-01	2/4

QTY	DLI PART NO.	DESCRIPTION	DESIGNATION
1		Trimmkondensator 5-90pF	C1
1		10p F	C67
3		120 pF	C45, C55, C65
1		180 pF	C86
4		680 pF	C82—85
61		22 nF Vielschicht	C3-5, C7-9, C11-18, C20, C22,
			C26-35, C38-40, C43, C44, C47-54
			C56-64, C66, C68-73, C75, C76, C78-81
1		0,1 µF	C2
2		22 µF / 10V	C24, C23
1		100 µF / 16V	C36
10		10 µF	C6, C10, C13, C21, C25, C41, C46,
			C74, C77, C37
2		VG-Leiste 64 pol. gew.	J1, J2
1		Stiftleiste 34 pol. gew.	J3
3		Stiftleiste 3 pol. gerade	
1		Stiftleiste 2 pol. gerade	
4		Jumper	JP1, JP2, JP4, JP5
2		IC-Sockel (Präz.) 40 pol.	
1		IC-Sockel (Präz.) 24 pol.	
15		IC-Sockel 20 pol.	
48		IC-Sockel 16 pol.	
29		IC-Sockel 14 pol.	
1		Stromschiene 80mm	Hektron M824/M825-06
1		Stromschiene 65mm	P = 15,24 (.6")
2		Auswerfer APC 0007	
2		Kreuzschlitz Senkschraube M2,5x6 DIN 965	

605	13.8.84				
460	31.1.84				
370	22.6.83				
CODE	ERN	DATE	REVISIONS	DATE	NAME
				CHECK	
				DRAWN	16.7.84 Schulz

DOLCH LOGIC INSTRUMENTS

PART LIST
ATLAS MP/H PROCESSOR

PART NUMBER	SHEET
S 2000 – 01	3/4

QTY	DLI PART NO.	DESCRIPTION	DESIGNATION
1	4 2000 - 01 Rev. D	7611	A7
1	4 2000 - 02 Rev. A	7611	A8
1	4 2000 - 03 Rev. D	7611	A10

H	5 04	4460	5320	CODE	ERN	DATE	13.8.84
				REVISIONS		DATE	NAME
				CHECK			
				DRAWN		5.7.84	U.FRANCK

DOLCH LOGIC INSTRUMENTS

PART LIST
ATLAS MP/M-PROCESSOR
PROGRAMMABLE IC'S

PART NUMBER: 5 2000 - 01

SHEET: 4/4

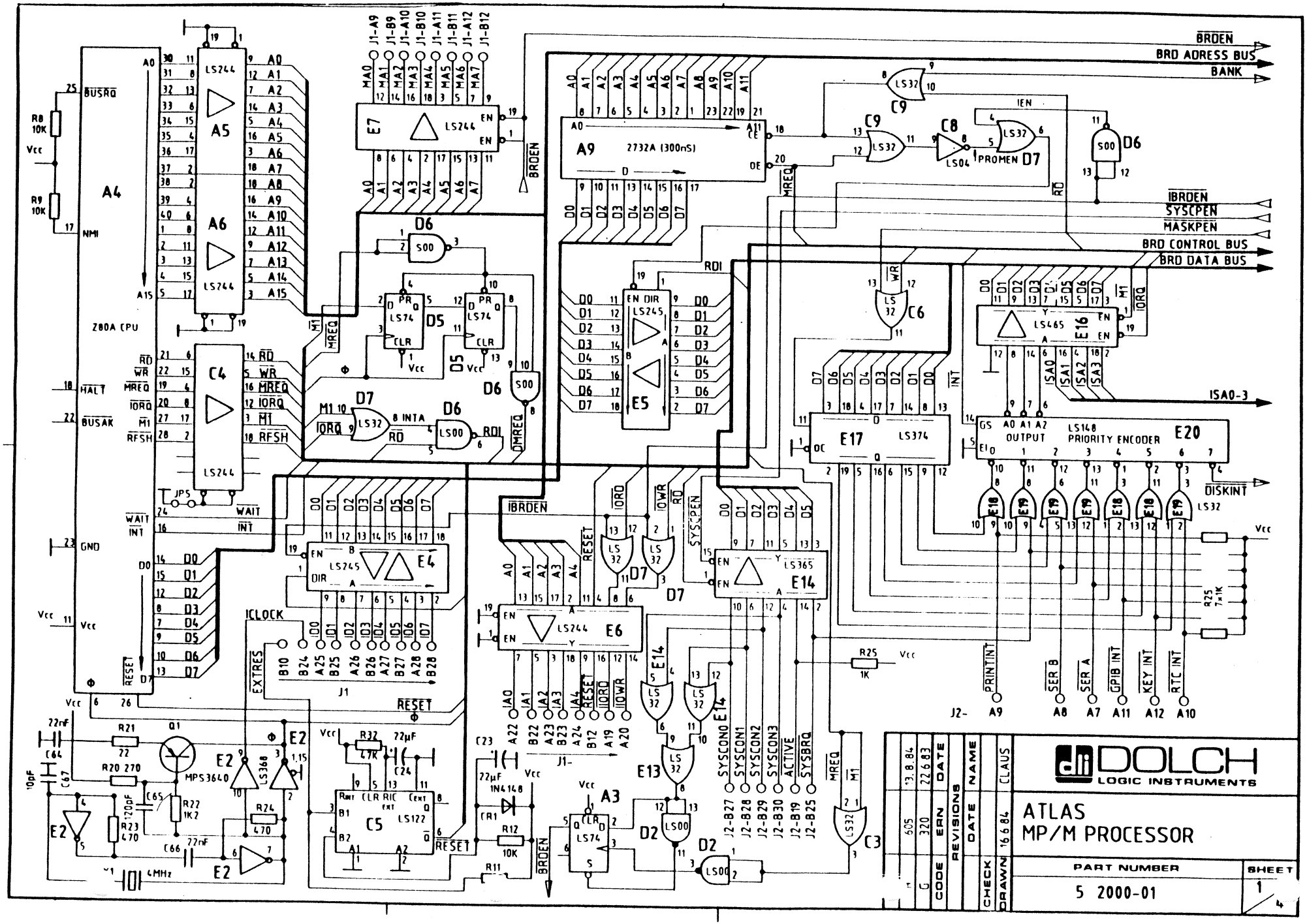
BRDEN
BRD ADRESS BUS
BANK
IBRDEN
SYSCPEN
MASKPEN
BRD CONTROL BUS
BRD DATA BUS
ISA0-3
DISKINT
A4
Z80A CPU
A5
A6
C4
LS244
E7
A9
2732A (300nS)
PROMEN D7
D6
D5
E5
LS245
E16
LS465
E17
LS374
E20
LS148 PRIORITY ENCODER
OUTPUT
E4
E6
E14
LS365
C5
LS122
A3
LS74
C6
C3
D2
LS00
LS32
LS04
LS37
S00
MPS3640
LS368
J1
J2-
J1-
PRINTINT
SER B
SER A
GPIB INT
KEY INT
RTC INT
ICLOCK
EXTRES
RESET
4MHz
DOLCH
LOGIC INSTRUMENTS
ATLAS
MP/M PROCESSOR
PART NUMBER
5 2000-01
SHEET
1
4
CODE
ERN
DATE
REVISIONS
NAME
DATE
CHECK
DRAWN
CLAUS
13.8.84
22.6.83
16.6.84

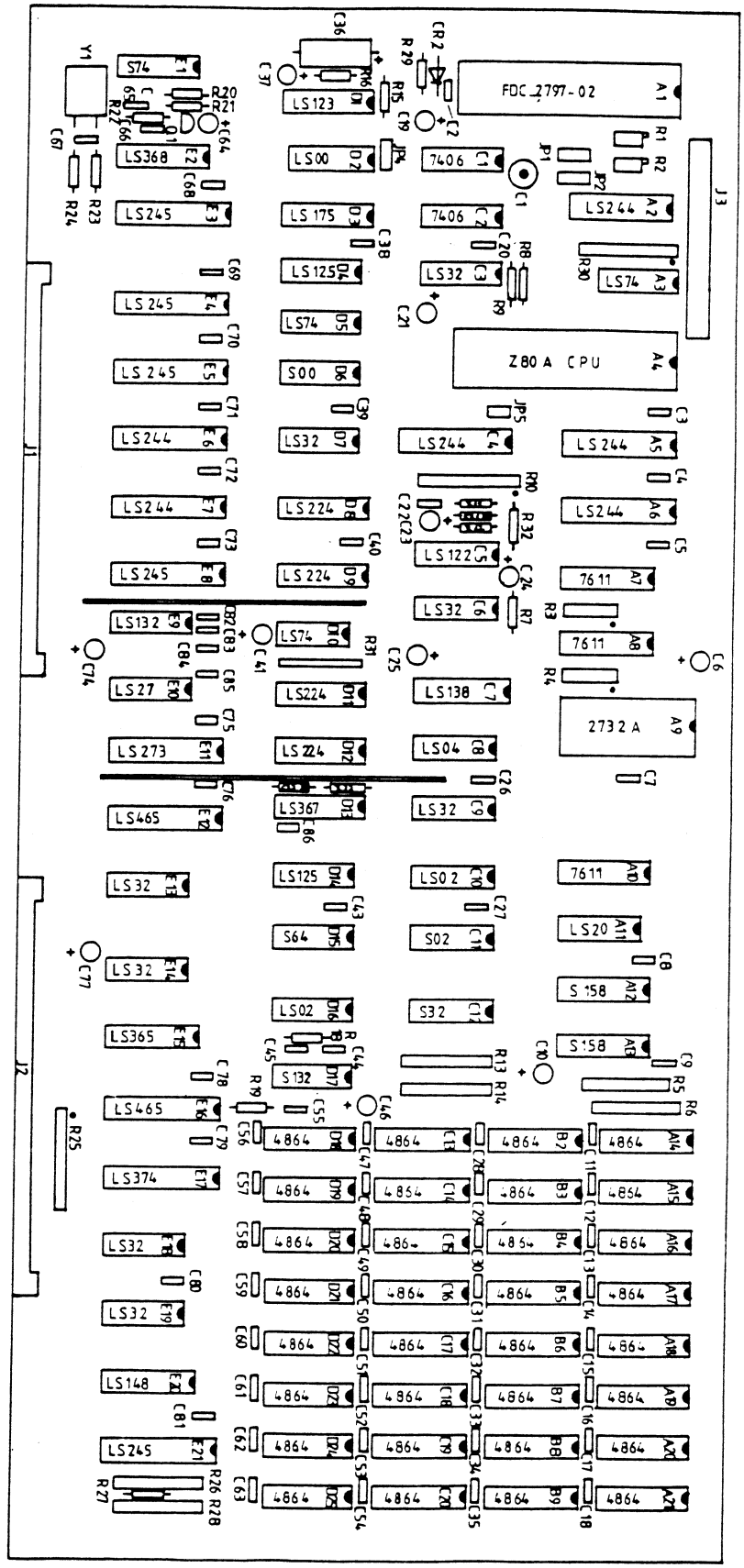

H	605	13.8.84
G	320	22.6.83
CODE	ERN	DATE
REVISIONS		
	DATE	NAME
CHECK		
DRAWN	23.12.1983	D. BERGER

DOLCH LOGIC INSTRUMENTS

ATLAS MP/M PROCESSOR

PART NUMBER

5 2000-01

SHEET 1/1

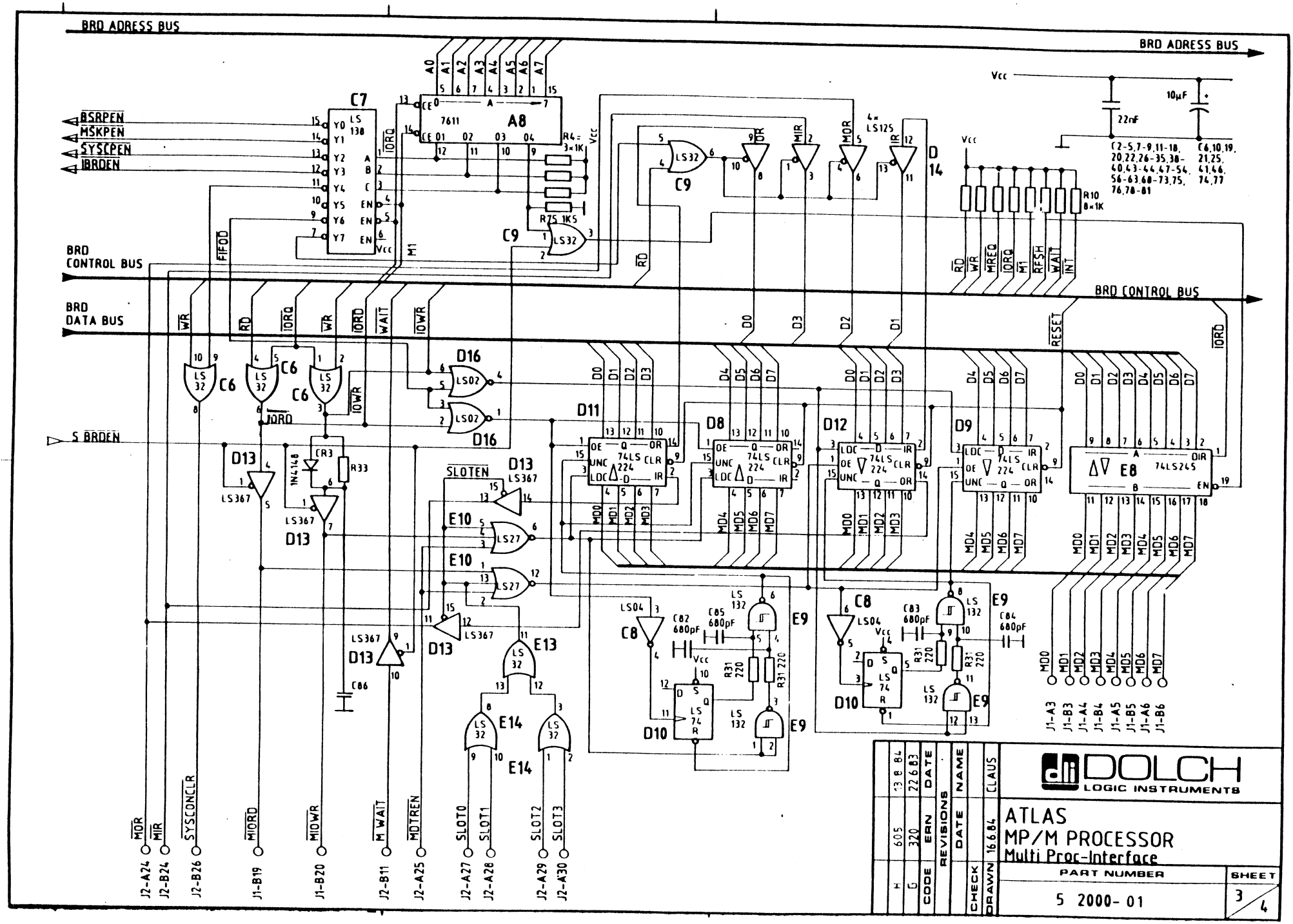
BRD ADRESS BUS
BRD ADRESS BUS
BSRPEN
MSKPEN
SYSCPEN
IBRDEN
BRD CONTROL BUS
BRD CONTROL BUS
BRD DATA BUS
S BRDEN
C7
LS 138
A8
7611
R4 = 3×1K
R75 1K5
C9
LS32
D 14
4× LS125
R10 8×1K
Vcc
22nF
10µF
C2-5,7-9,11-18, 20,22,26-35,38-40,43-44,47-54, 56-63,68-73,75, 76,78-81
C6,10,19, 21,25, 41,46, 74,77
C6
LS 32
D16
LS02
D11
D8
D12
D9
74LS 224
E8
74LS245
D13
LS367
R33
1N4148
C86
SLOTEN
E10
LS27
E13
E14
C8
LS04
C82 680pF
C85 680pF
C83 680pF
C84 680pF
R31 220
E9
LS 132
D10
LS 74
J2-A24
J2-B24
J2-B26
J1-B19
J1-B20
J2-B11
J2-A25
J2-A27
J2-A28
J2-A29
J2-A30
J1-A3
J1-B3
J1-A4
J1-B4
J1-A5
J1-B5
J1-A6
J1-B6
DOLCH
LOGIC INSTRUMENTS
ATLAS
MP/M PROCESSOR
Multi Proc-Interface
PART NUMBER
5 2000- 01
SHEET
3/4
CODE
ERN
DATE
REVISIONS
DATE
NAME
CHECK
DRAWN
CLAUS
16.6.84
22.6.83
13.8.84
605
320

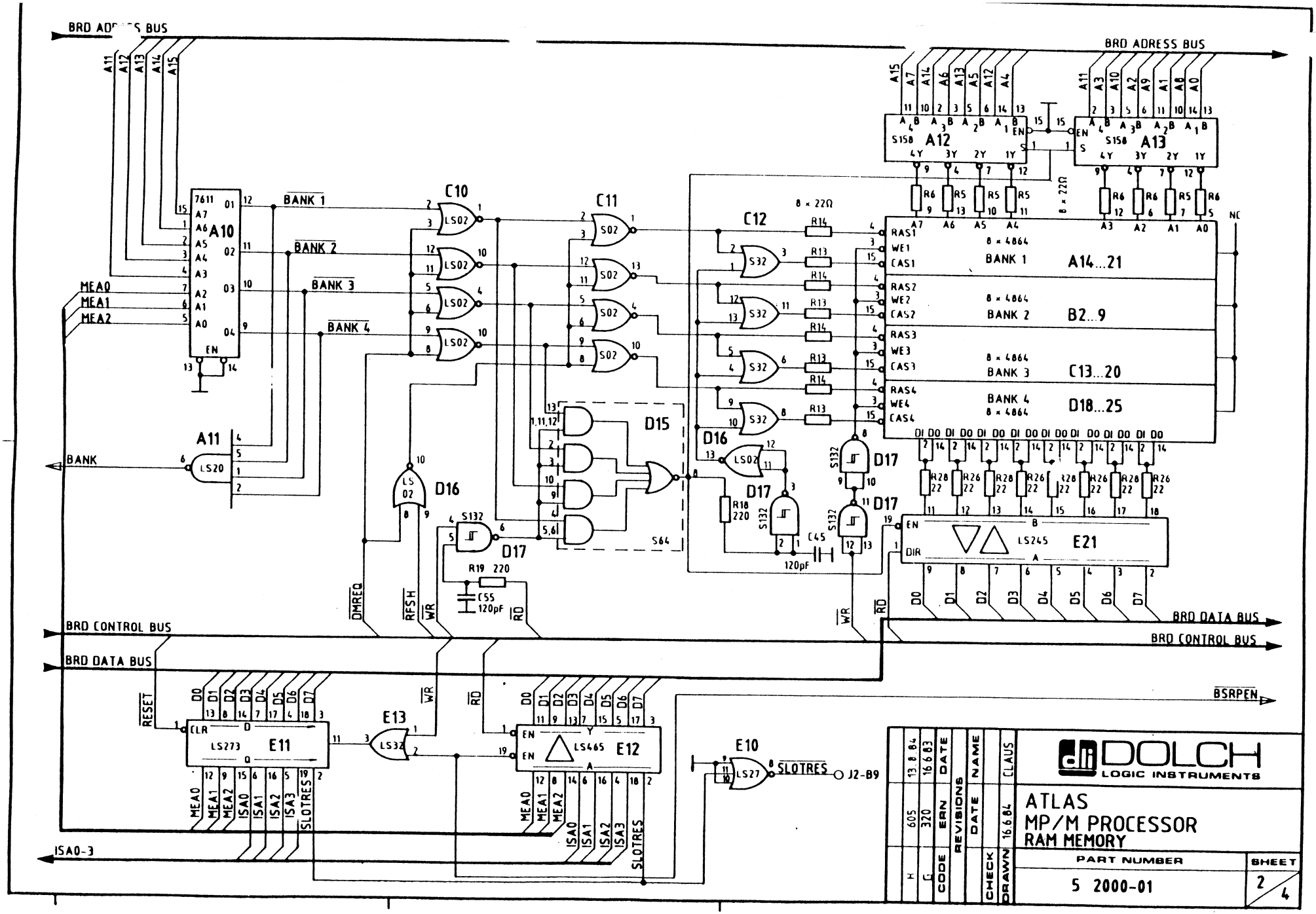
BRD ADRESS BUS
BRD CONTROL BUS
BRD DATA BUS
ISA0-3
BSRPEN
BANK
MEA0
MEA1
MEA2
BANK 1
BANK 2
BANK 3
BANK 4
A10
A11
A12
A13
A14...21
B2...9
C13...20
D18...25
E10
E11
E12
E13
E21
C10
C11
C12
D15
D16
D17
S64
8 × 4864
8 × 22Ω
SLOTRES
J2-B9
DOLCH
LOGIC INSTRUMENTS
ATLAS
MP/M PROCESSOR
RAM MEMORY
PART NUMBER
5 2000-01
SHEET
2/4
CODE
REVISIONS
DATE
NAME
CHECK
DRAWN
CLAUS

QTY	DLI PART NO.	DESCRIPTION	DESIGNATION
3		74 LS 02	C4, C6, D11
1		74 LS 04	C5
1		74 LS 20	E10
1		74 LS 27	E7
3		74 LS 32	C3, D9, E2
4		74 LS 74	C1, D1, D3, E1
2		74 LS 125	E3, E11
1		74 LS 132	D4
1		74 LS 138	A6
1		74 LS 139	C6
1		74 LS 174	E8
4		74 LS 224	D5 - D8
4		74 LS 244	A3, A4, C2, E5
4		74 LS 245	E4, E6, E12, E13
1		74 LS 365	E9
1		74 LS 368	A1
1		74 S 00	D2
1		74 S 02	C8
1		74 S 32	C9
1		74 S 64	D10
1		74 S 132	D12
3		74 S 158	A8, A9, A10
1		Z 80 A CPU	A2
32		4864 (8264-20)	A11-18, B1-8, C10-17
			D13-20
1		2732 A	A7
1		7611	A5

	13.8.84	DATE	
		REVISIONS	
		DATE	
		CHECK	
	448	DRN	
	F	CODE	
		DRAWN	13.8.84

DOLCH LOGIC INSTRUMENTS

PART LIST

LA PROCESSOR

PART NUMBER	SHEET
5 2000-02 A1	1/4

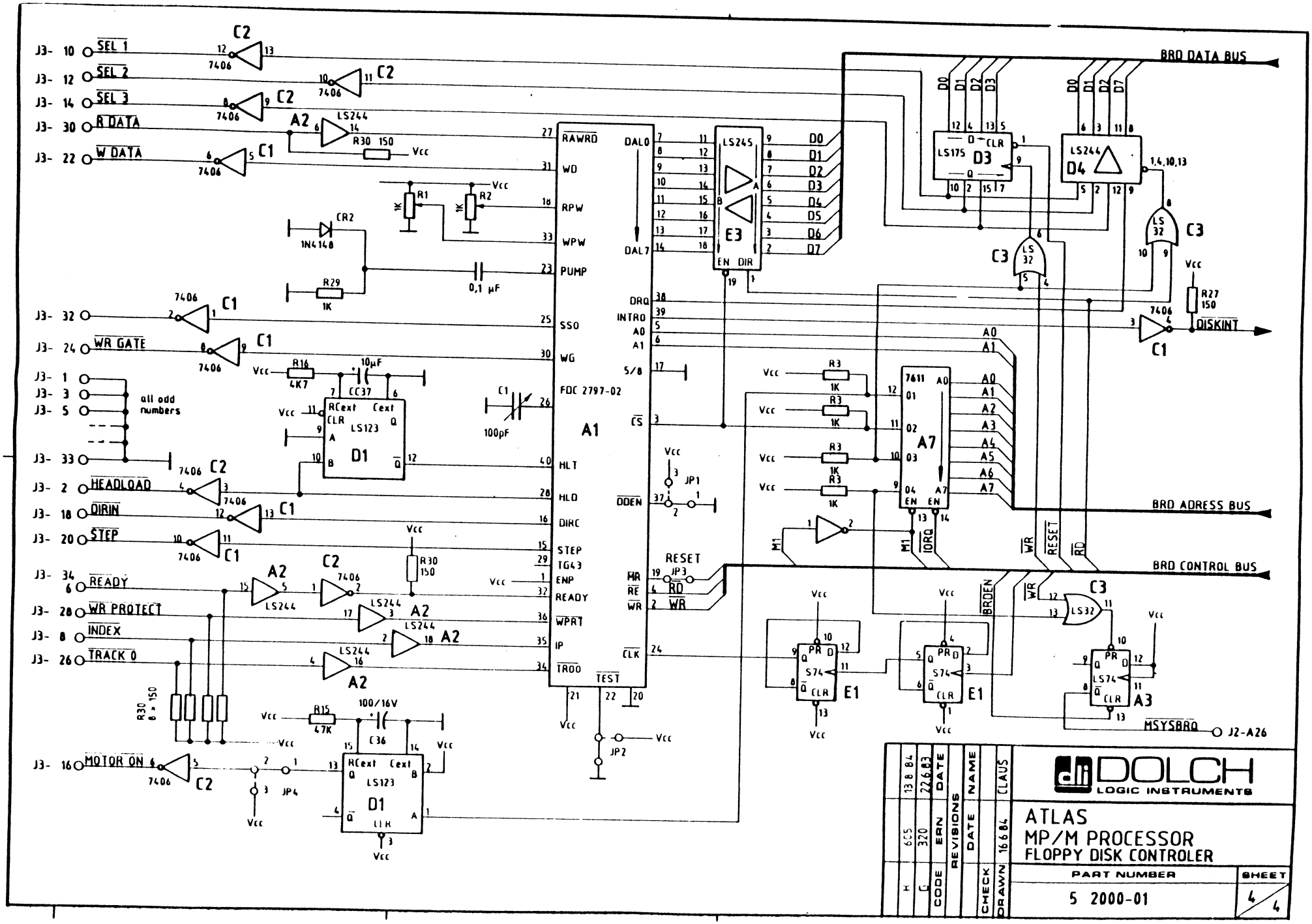
BRD DATA BUS
BRD ADRESS BUS
BRD CONTROL BUS
J3- 10 SEL 1
J3- 12 SEL 2
J3- 14 SEL 3
J3- 30 R DATA
J3- 22 W DATA
J3- 32
J3- 24 WR GATE
J3- 1
J3- 3
J3- 5
all odd numbers
J3- 33
J3- 2 HEADLOAD
J3- 18 DIRIN
J3- 20 STEP
J3- 34
J3- 6 READY
J3- 28 WR PROTECT
J3- 8 INDEX
J3- 26 TRACK 0
J3- 16 MOTOR ON
DISKINT
MSYSBRQ J2-A26
A1 FDC 2797-02
RAWRD
WD
RPW
WPW
PUMP
SSO
WG
HLT
HLD
DIRC
STEP
TG43
ENP
READY
WPRT
IP
TR00
DAL0
DAL7
DRQ
INTRQ
A0
A1
S/B
CS
DDEN
CLK
TEST
RESET
RD
WR
LS245
E3
EN DIR
LS175 D3
LS244 D4
LS32 C3
7611 A7
LS74 E1
LS74 A3
LS123 D1
LS244 A2
7406 C1
7406 C2
BRDEN
M1
IORQ
DOLCH LOGIC INSTRUMENTS
ATLAS
MP/M PROCESSOR
FLOPPY DISK CONTROLER
PART NUMBER
5 2000-01
SHEET
4/4
REVISIONS
DATE
NAME
CLAUS
CHECK
DRAWN 16 6 84
CODE
ERN
DATE
320
22.6.83
13 8 84

QTY	DLI PART NO.	DESCRIPTION	DESIGNATION
1		Widerstand 22Ω	R5
1		" 120Ω	R25
2		" 220Ω	R16, 17
1		" 270Ω	R4
1		" 330Ω	R19
2		" 470Ω	R1, R2
1		" 1K2	R3
1		" 1K5	R24
1		" 2K2	R22
2		" 4K7	R18, R26
3		" 10K	R6, 7, 15
6		SIL 4 x 22Ω 8p.	R9, 10, 13, 14, 20, 21
1		SIL 4 x 220Ω 8p.	R23
3		SIL 4 x 1K 5P	R8, 11, 12
1		Kondens. Ker. 10pF	C1
3		" 120 pF	C3, 41, 42
1		" 180pF	C84
1		" 220pF	C61
4		" 680pF	C80, 81, 82, 83
8		Tantal 10µF/25V	C9, 13, 23, 35, 37, 43, 66, 68
58		Vielschicht 22nF	C2, 4, 5-8, 11, 12
			C14-22, 24-34
			C36, 38, 39, 40, 44-60
			C62-65, 67, 69, 70, 71

	13.8.84	DATE	NAME	Stadler	DOLCH LOGIC INSTRUMENTS
	448	SRN	REVISIONS DATE	13.8.84	PART LIST LA PROCESSOR
	F	CODE		CHECK / DRAWN	PART NUMBER 5 2000 - 02 A1 / SHEET 2/4

QTY	DLI PART NO.	DESCRIPTION	DESIGNATION
1		Transistor MPS3640	Q1
1		" BC 237 B	Q2
1		Diode 1N 4148	D1
1		Quarz 4 MHz	Y1
2		VG Messerleiste gew. 64p.	J1, J2
1		Stiftleiste 1×2p.	JP1,
1		" 1×3p.	JP2
2		Jumper 2p.	
8		Sockel 20p.	
45		" 16p.	
21		" 14p.	
1		Präzisionssockel 40p.	
1		" 24p.	
2		Auswerfer APC 0007	
2		Schrauben ⊗-senk	M2,5×6 DIN 965
1	5 2000-02	Leiterplatte Rev. F	

		13.8.84	DATE	NAME	Schulz
		448	ERN	REVISIONS DATE	13.8.84
		F	CODE		CHECK / DRAWN

DOLCH LOGIC INSTRUMENTS

PART LIST
LA PROCESSOR

PART NUMBER: 5 2000-02 A1

SHEET: 3/4

QTY	DLI PART NO.	DESCRIPTION	DESIGNATION
1	4 2000-04 Rev.A	7611	A5

	13.8.84	DATE	NAME		DOLCH LOGIC INSTRUMENTS
	448	DRN	REVISIONS	DATE	13.8.84	PART LIST LA PROCESSOR PROGRAMMABLE IC's
F		CODE		CHECK	DRAWN	PART NUMBER	SHEET
						5 2000-02 A1	4/4

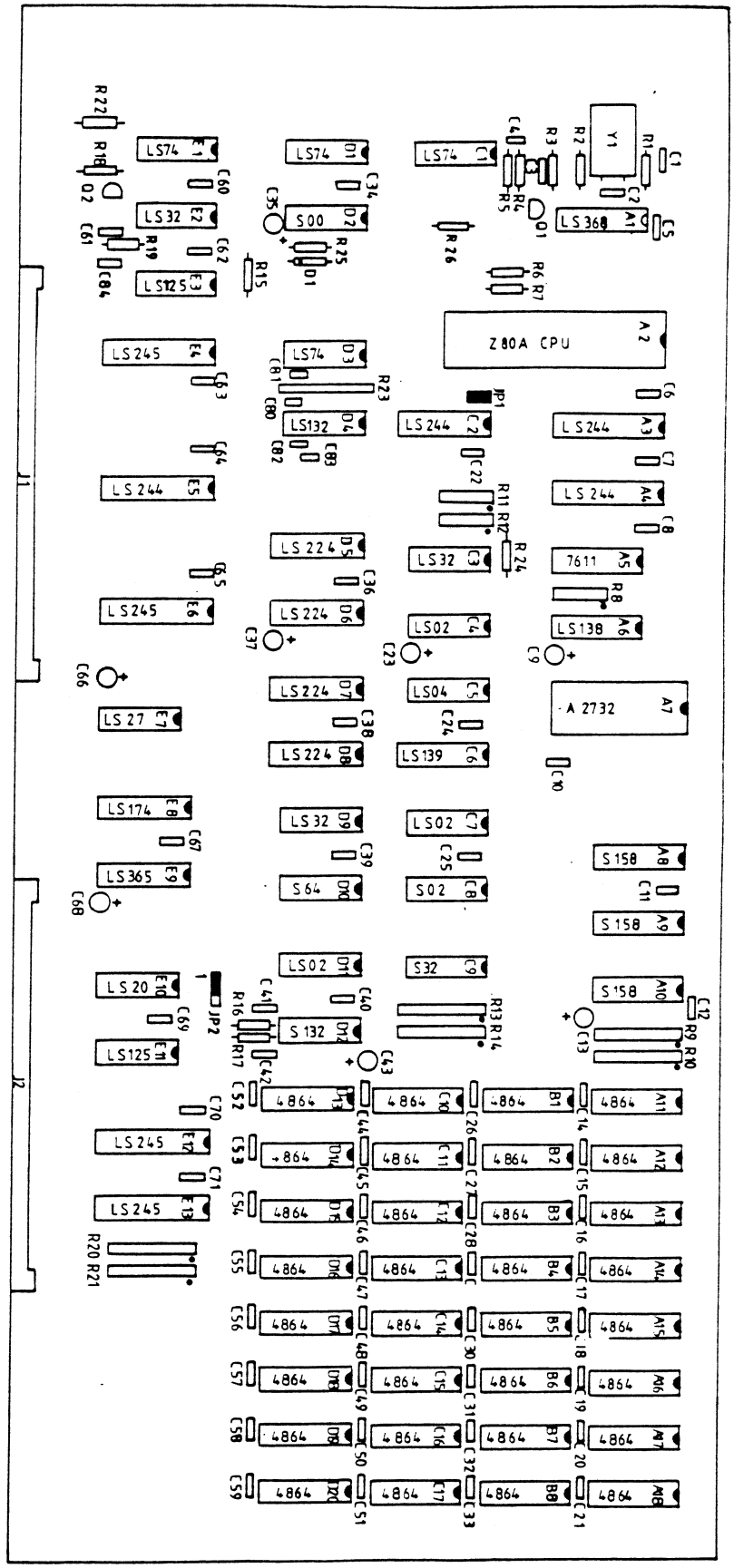

		10.8.84
F	319	22.6.83
CODE	ERN	DATE
REVISIONS		
	DATE	NAME
CHECK		
DRAWN	22.12.83	D BERGER

DOLCH LOGIC INSTRUMENTS

ATLAS LA PROCESSOR

PART NUMBER 5 2000-02 A1

SHEET 1

QTY	DLI PART NO.	DESCRIPTION	DESIGNATION
3		74 LS 02	C4, C6, D11
1		74 LS 04	C5
1		74 LS 20	E10
1		74 LS 27	E7
3		74 LS 32	C3, D9, E2
3		74 LS 74	D1, D3, E1
2		74 LS 125	E3, E11
1		74 LS 132	D4
1		74 LS 138	A6
1		74 LS 139	C6
1		74 LS 174	E8
4		74 LS 224	D5 - D8
3		74 LS 244	A3, A4, C2
3		74 LS 245	E4, E12, E13
1		74 LS 365	E9
1		74 LS 368	A1
1		74 S 00	D2
1		74 S 02	C8
1		74 S 32	C9
1		74 S 64	D10
1		74 S 132	D12
3		74 S 158	A8, A9, A10
1		Z 80 A CPU	A2
32		4864 (8264-20)	A11-18, B1-8, C10-17
			D13-20
1		2732 A	A7
1		7611	A5

	13.8.84	DATE	NAME	Stoll	DOLCH LOGIC INSTRUMENTS
	448	BRN	REVISIONS DATE	13.8.84	PART LIST LA PROCESSOR
	F	CODE		CHECK / DRAWN	PART NUMBER: 5 2000-02 A2 — SHEET 1/4

QTY	DLI PART NO.	DESCRIPTION	DESIGNATION
1		Widerstand 22Ω	R5
1		" 120Ω	R25
2		" 220Ω	R16, 17
1		" 270Ω	R4
1		" 330Ω	R19
2		" 470Ω	R1, R2
1		" 1K2	R3
1		" 1K5	R24
1		" 2K2	R22
2		" 4K7	R18, R26
3		" 10K	R6, 7, 15
6		SIL 4 x 22Ω 8p.	R9, 10, 13, 14, 20, 21
1		SIL 4 x 220Ω 8p.	R23
3		SIL 4 x 1K 5p	R8, 11, 12
1		Kondens. Ker. 10pF	C1
3		" 120pF	C3, 41, 42
1		" 180pF	C84
1		" 220pF	C61
4		" 680pF	C80, 81, 82, 83
8		Tantal 10µF/25V	C9, 13, 23, 35, 37, 43, 66, 68
58		Vielschicht 22nF	C2, 4, 5-8, 11, 12
			C14-22, 24-34
			C36, 38, 39, 40, 44-60
			C62-65, 67, 69, 70, 71

	13.8.84	DATE	NAME	Schröl	DOLCH LOGIC INSTRUMENTS
	448	ERN	REVISIONS DATE	13.8.84	PART LIST LA PROCESSOR
F		CODE	CHECK	DRAWN	PART NUMBER 5 2000 - 02 A2 — SHEET 2/4

QTY	DLI PART NO.	DESCRIPTION	DESIGNATION
1		Transistor MPS3640	Q1
1		" BC 237 B	Q2
1		Diode 1N 4148	D1
1		Quartz 4 MHz	Y1
2		VG Messerleiste geu. 64p.	J1, J2
1		Stiftleiste 1×2p.	JP1,
1		" 1×3p.	JP2
2		Jumper 2p.	
8		Sockel 20p.	
45		" 16p.	
21		" 14p.	
1		Präzisionssockel 40p	
1		" 24p.	
2		Auswerfer APC 0007	
2		Schrauben ⊗-senk	M2,5×6 DIN 965
1	5 2000 - 02	Leiterplatte Rev. F	

	13.8.84	DATE	NAME	DOLCH LOGIC INSTRUMENTS
	448	BRN	DATE	PART LIST LA PROCESSOR
F		CODE	REVISIONS	CHECK / DRAWN 13.8.84
				PART NUMBER: 5 2000-02 A2 — SHEET 3/4

QTY	DLI PART NO.	DESCRIPTION	DESIGNATION
1	4 2000-04 Rev.A	7611	A5

	13.8.84	DATE	NAME		DOLCH LOGIC INSTRUMENTS
448	SRN	REVISIONS	DATE	13.8.84	PART LIST LA PROCESSOR PROGRAMMABLE IC's
F	CODE		CHECK	DRAWN	PART NUMBER: 5 2000-02 A2 — SHEET 4/4

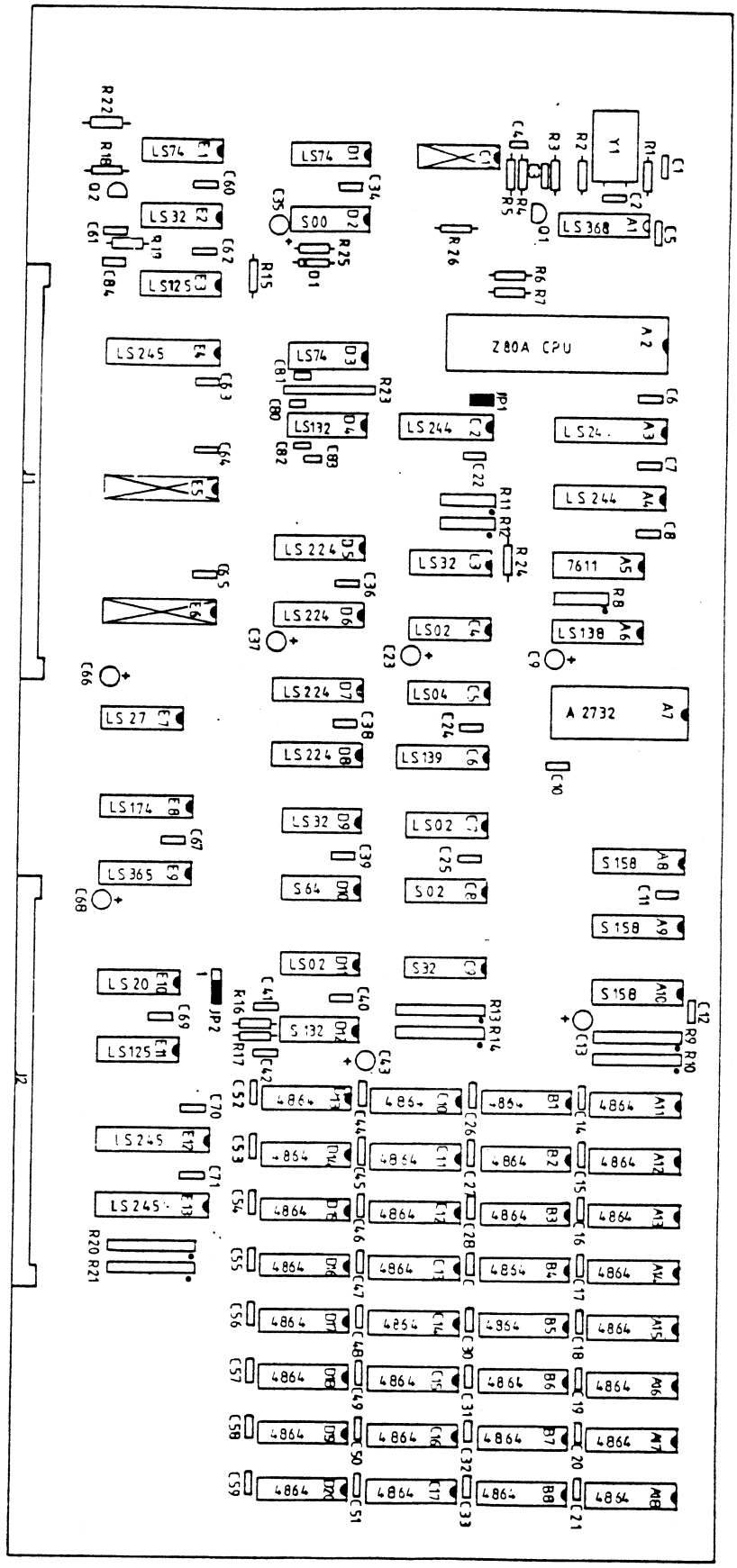

		10.8.84
F	319	22 6 83
CODE	ERN	DATE
REVISIONS		
	DATE	NAME
CHECK		
DRAWN	22 12 83	D BERGER

DOLCH LOGIC INSTRUMENTS

ATLAS LA PROCESSOR

PART NUMBER 5 2000-02 A2

SHEET 1/1

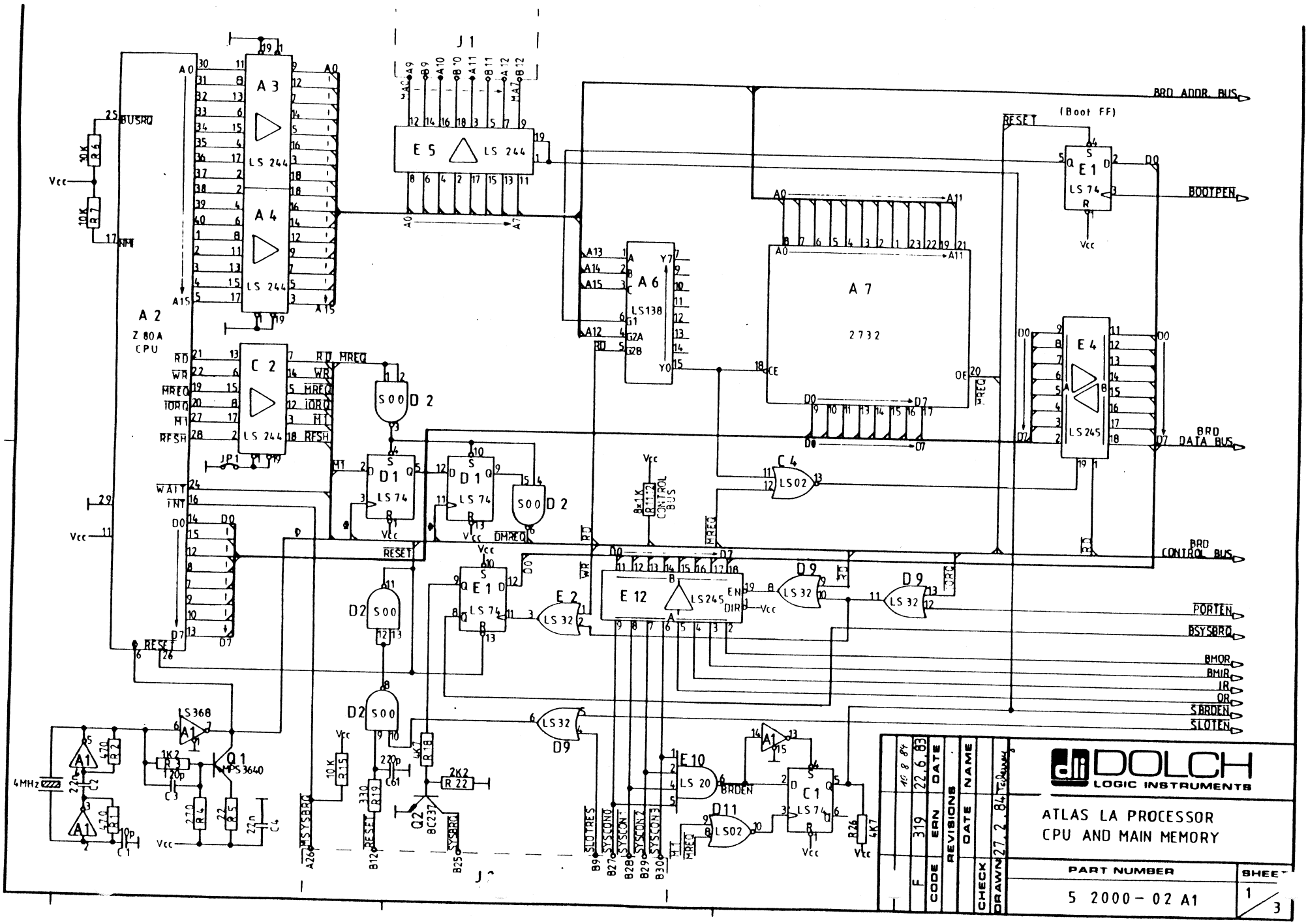
BRD ADDR. BUS
(Boot FF)
BOOTPEN
BRD DATA BUS
BRD CONTROL BUS
PORTEN
BSYSBRD
BMOR
BMIR
IR
OR
SBRDEN
SLOTEN
A 2
Z 80A CPU
A 3
A 4
LS 244
E 5
J 1
A 6
LS138
A 7
2732
E 1
LS 74
E 4
LS 245
C 2
D 1
D 2
S00
C 4
LS02
E 12
E 2
LS 32
D 9
E 10
LS 20
D 11
C 1
Q 1
MPS3640
Q 2
BC237
LS368
4MHz
CONTROL BUS
BRDEN
SYSCON
SLOTRES
DMREQ
RESET
BUSRQ
WAIT
INT
MREQ
IORQ
RD
WR
RFSH
M1
Vcc
J 2
DOLCH LOGIC INSTRUMENTS
ATLAS LA PROCESSOR
CPU AND MAIN MEMORY
PART NUMBER
5 2000 - 02 A1
SHEET
1/3
CODE
ERN
DATE
REVISIONS
NAME
CHECK
DRAWN
27.2.84
22.6.83
319
F

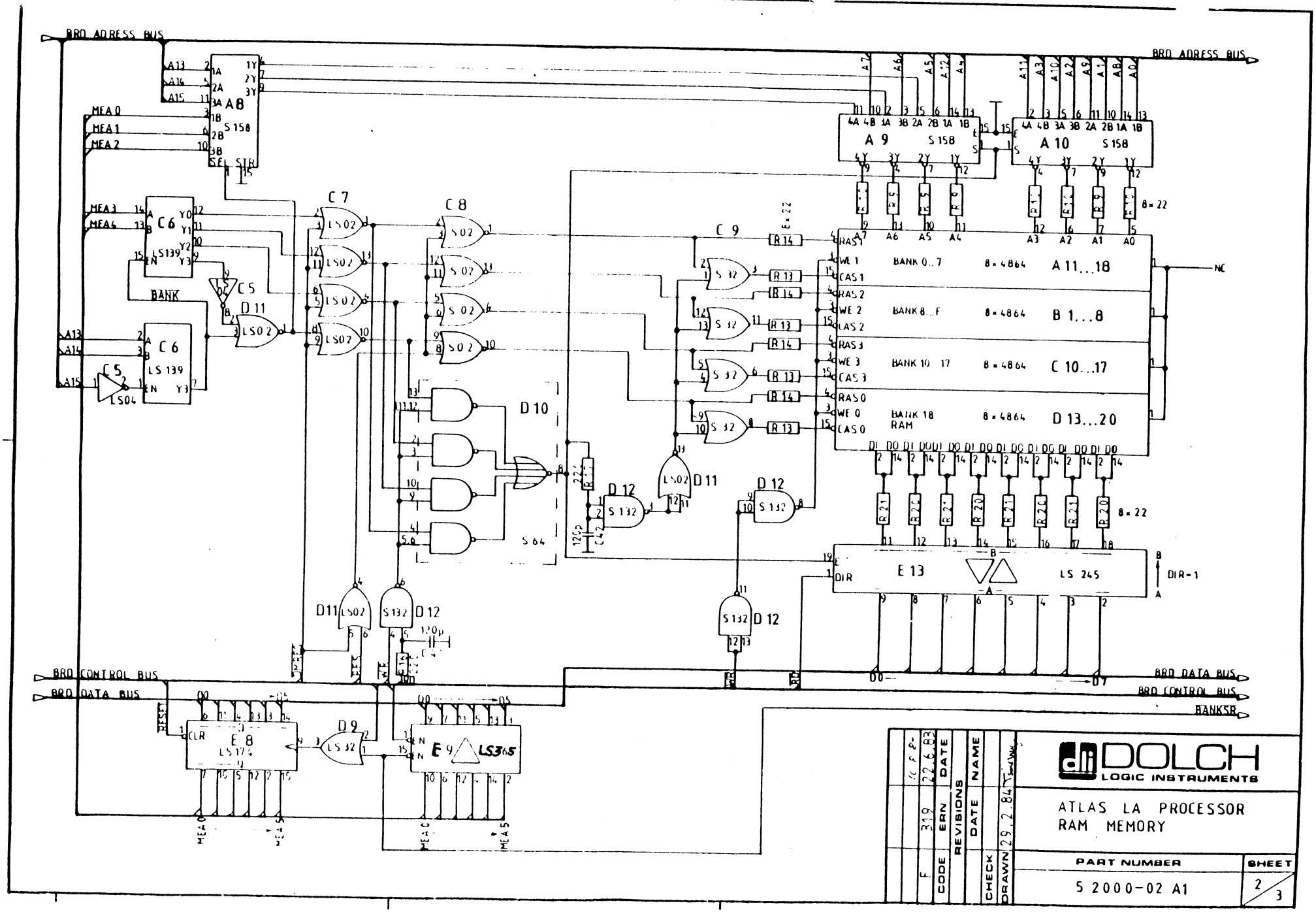
BRD ADRESS BUS
A8 S 158
MEA 0
MEA 1
MEA 2
MEA 3
MEA 4
C6 LS139
BANK
C6 LS 139
C5 LS04
C5 LS02
D11 LS02
C7 LS02
C8 S02
D10 S 64
C9 S 32
R 13
R 14
D 12 S 132
D11 LS02
D 12 S 132
A 9 S 158
A 10 S 158
8 × 22
RAS 1
WE 1
CAS 1
RAS 2
WE 2
CAS 2
RAS 3
WE 3
CAS 3
RAS 0
WE 0
CAS 0
BANK 0...7
8 × 4864
A 11...18
BANK 8...F
B 1...8
BANK 10 17
C 10...17
BANK 18
RAM
D 13...20
NC
E 13 LS 245
DIR
DIR-1
BRD CONTROL BUS
BRD DATA BUS
BANKSR
E 8 LS 174
D 9 LS 32
E 9 LS365
MEA 0
MEA 5
DOLCH
LOGIC INSTRUMENTS
ATLAS LA PROCESSOR
RAM MEMORY
PART NUMBER
5 2000-02 A1
SHEET
2/3
REVISIONS
CODE
ERN
DATE
NAME
CHECK
DRAWN
29.2.84

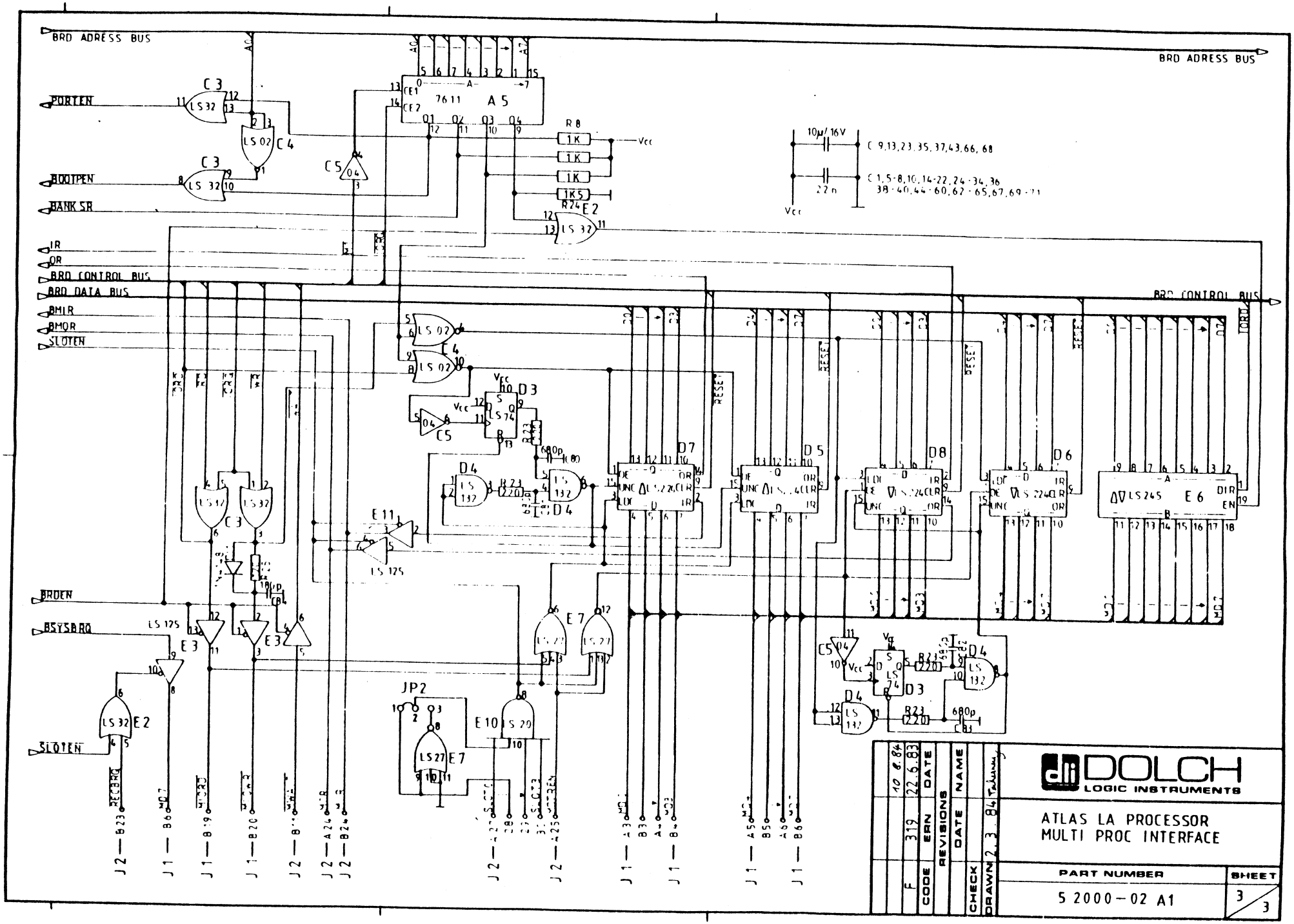
BRD ADRESS BUS
PORTEN
BOOTPEN
BANK SR
IR
OR
BRD CONTROL BUS
BRD DATA BUS
BMIR
BMOR
SLOTEN
BRDEN
BSYSBRQ
SLOTEN
A5
7611
E2
E3
E4
E6
E7
E10
E11
D3
D4
D5
D6
D7
D8
C3
C4
C5
R8
R24
JP2
LS 245
LS 125
LS 132
LS 74
LS 20
LS 27
LS 32
LS 02
LS 04
1K
1K5
10µ/16V
22n
Vcc
C 9,13,23,35,37,43,66,68
C 1,5-8,10,14-22,24-34,36
38-40,44-60,62-65,67,69-71
DOLCH
LOGIC INSTRUMENTS
ATLAS LA PROCESSOR
MULTI PROC INTERFACE
PART NUMBER
5 2000-02 A1
SHEET
3/3
F
319
CODE
ERN
DATE
10.6.84
22.6.83
REVISIONS
DATE
NAME
CHECK
DRAWN
2.3.84

QTY	DLI PART NO.	DESCRIPTION	DESIGNATION
1		74 LS 02	D1
1		74 LS 14	D3
2		74 LS 74	D4, D6
1		74 LS 148	C1
2		74 LS 174	A2, B2
1		74 LS 293	C2
1		74 LS 244	A4
1		74 LS 390	D2
1		74 S 08	D7
2		74 S 138	A1, B1
1		2764 -3	A3
1		MC 14490	D5
1		BC 237	T1
1		120	R29
1		180	R20
2		330	R16, R17
6		470	R12 – R14, R21, R31, R32
1		680	R15
10		1k2	R1-3, R22-25, R27, R28, R19
1		1k5	R18
1		2k7	R26
8		4k7	R4-11
1		5k6	R30
1		68pF	C4
1		680pF	C3
1		1,2nF	C2
1		1,5nF	C1
9		22nF	CA
2		10 µF /25V tantal	CB

F	5.84	25.7.84	DATE	NAME	Fahrenholz
E	3.88	17.8.83	REVISIONS		
CODE		BRN		DATE	
			CHECK	6.9.84	
			DRAWN		

DLI DOLCH LOGIC INSTRUMENTS

PART LIST

ATLAS KEYBOARD

PART NUMBER	SHEET
S 2000-04 Rev. B	1/4

QTY	DLI PART NO.	DESCRIPTION	DESIGNATION
1		Stiftleiste 16pol. gerade	
1	75 540 002	Minisert 2x 14 pol.	Berg (Kapton Streifen)
1	5 2000 – 04 Rev. F	Platine	
1	5 8000 0.001 / 9121	Tastenkappe, Form 4, anthrazit	Symbol: A (weiß)
1	" 0.002 "	"	" B "
1	" 0.003 "	"	" C "
1	" 0.004 "	"	" D "
1	" 0.005 "	"	" E "
1	" 0.006 "	"	" F "
1	" 0.007 "	"	" G "
1	" 0.008 "	"	" H "
1	" 0.009 "	"	" I "
1	" 0.010 "	"	" J "
1	" 0.011 "	"	" K "
1	" 0.012 "	"	" L "
1	" 0.013 "	"	" M "
1	" 0.014 "	"	" N "
1	" 0.015 "	"	" O "
1	" 0.016 "	"	" P "
1	" 0.017 "	"	" Q "
1	" 0.018 "	"	" R "
1	" 0.019 "	"	" S "
1	" 0.020 "	"	" T "
1	" 0.021 "	"	" U "
1	" 0.022 "	"	" V "
1	" 0.023 "	"	" W "
1	" 0.024 "	"	" X "
1	" 0.025 "	"	" Y "
1	" 0.026 "	"	" Z "

CODE	ERN	DATE	REVISIONS	NAME	DATE	CHECK	DRAWN
F	584	25.7.84					8.8.84
E	388	1.7.83					

DOLCH LOGIC INSTRUMENTS

PART LIST

ATLAS KEYBOARD

PART NUMBER	SHEET
52000 -04 Rev. B	2/4

QTY	DLI PART NO.	DESCRIPTION	DESIGNATION
1	5 8000 0.036 /9121	Tastenkappe	Symbol: 0
1	" 0.037 "	"	" 1
1	" 0.038 "	"	" 2
1	" 0.040 "	"	" 4
1	" 0.041 "	"	" 5
1	" 0.042 "	"	" 6
1	" 0.043 "	"	" 7
1	" 0.044 "	"	" 8
1	" 0.045 "	"	" 9
1	" 0.048 "	"	" =
1	" 0.050 "	"	" +
1	" 0.051 "	"	" *
1	" 0.052 "	"	" <
1	" 0.053 "	"	" >
1	" 0.056 "	"	" CTRL
1	" 0.063 "	"	" —
1	" 0.073 "	"	" # 3
1	" 0.079 "	"	" ~ ^
1	" 0.100 "	"	" ←
1	" 0.101 "	"	" →
1	" 0.102 "	"	" ↓
1	" 0.103 "	"	" ↑
1	" 0.104 "	"	" ↖
1	" 0.130 "	"	" BS
1	" 0.134 "	"	" DEL
1	" 0.136 "	"	" ESC
1	" 0.145 "	"	" LINE FEED
1	" 0.192 "	"	" @
1	" 0.196 "	"	"
1	" 0.197 "	"	"
1	" 0.198 "	"	"
1	" 0.301 "	"	" CLR
1	" 1.253 "	"	" ? /

					DOLCH LOGIC INSTRUMENTS
					PART LIST
					ATLAS KEYBOARD
					PART NUMBER: 52000-04 Rev. B
					SHEET: 3/4

QTY	DLI PART NO.	DESCRIPTION	DESIGNATION
1	5.80000.000/9121	Tastenkappe	Symbol: BREAK
1	5.80010.000/ "	"	" TAB
2	5.80010.801/ "	"	" SHIFT
1	5.80020.000/ "	"	" RETURN
2	5.80000.000/0754	" (hellgrau)	" RESET
19	5.80000.000/0152	" Form 4 (1-tg)	
1	5.80050.000/ "	" " (8-tg)	
1	5.04665.911/5510	" Form 6 (belb.)	
1	5.49007.022/1002	Blende Form 6 (farblos)	
1	5.73037.000/0152	Schrifteinlage Form 6	⊔
1	3.13002.022	Einbauschalter RS 76 M	Schließer
86	3.13005.004	Einbautaster RS 76 M	"
1	5.35238.039	Bügel 8-tg	
2	5.55101.489	Stößel	
2	5.30759.006/0105	Buchsen für 1,5 mm Lpl	
1	1.90690.106	Leuchtdiode rot	

F	584	25.7.84			
E	388	17.7.83			
CODE	BRN	DATE	REVISIONS	DATE	NAME
				CHECK	
				DRAWN	8.8.84 Tschirner

DLI DOLCH LOGIC INSTRUMENTS

PART LIST
ATLAS KEYBOARD

PART NUMBER	SHEET
S 2000 -04 Rev. B	4/4

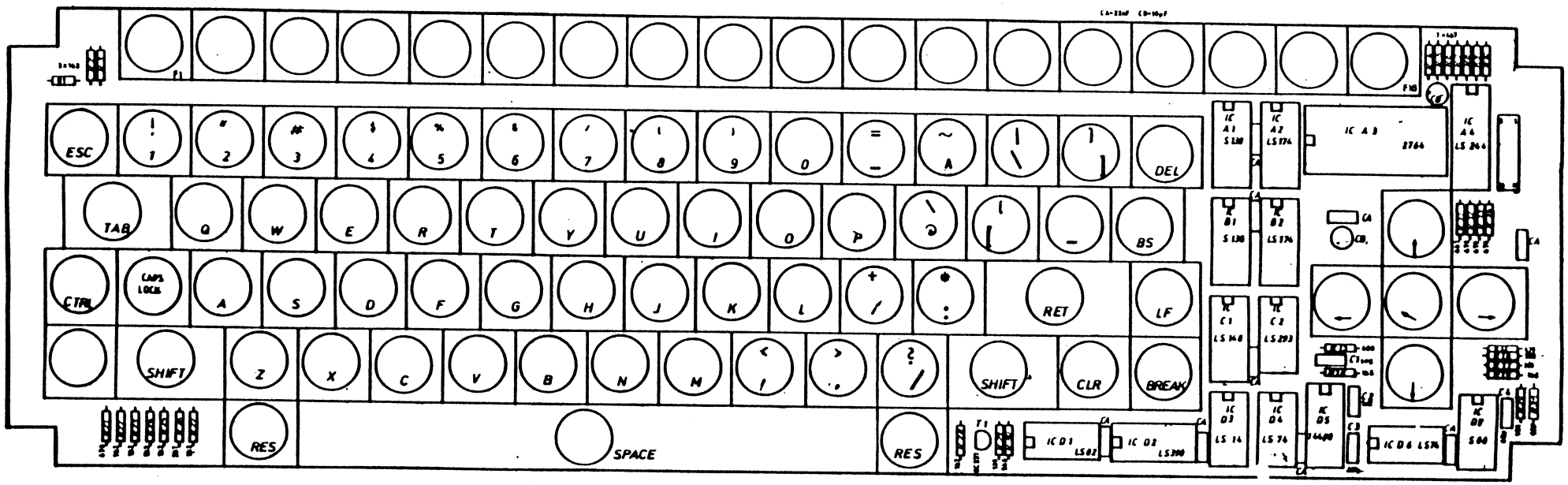

Bestückungsplan ATLAS KEYBOARD P.N.S 2000-04 Rev F DOLCH Sept 1982 Bruder

F	584	25.01.84	CODE	EAN	DATE		DOLCH LOGIC INSTRUMENTS
E	388	23.9.83		REVISIONS			ATLAS KEYBOARD
					DATE	NAME	
				CHECK			
				DRAWN	31.10.83		PART NUMBER: S 2000 - 04
							SHEET

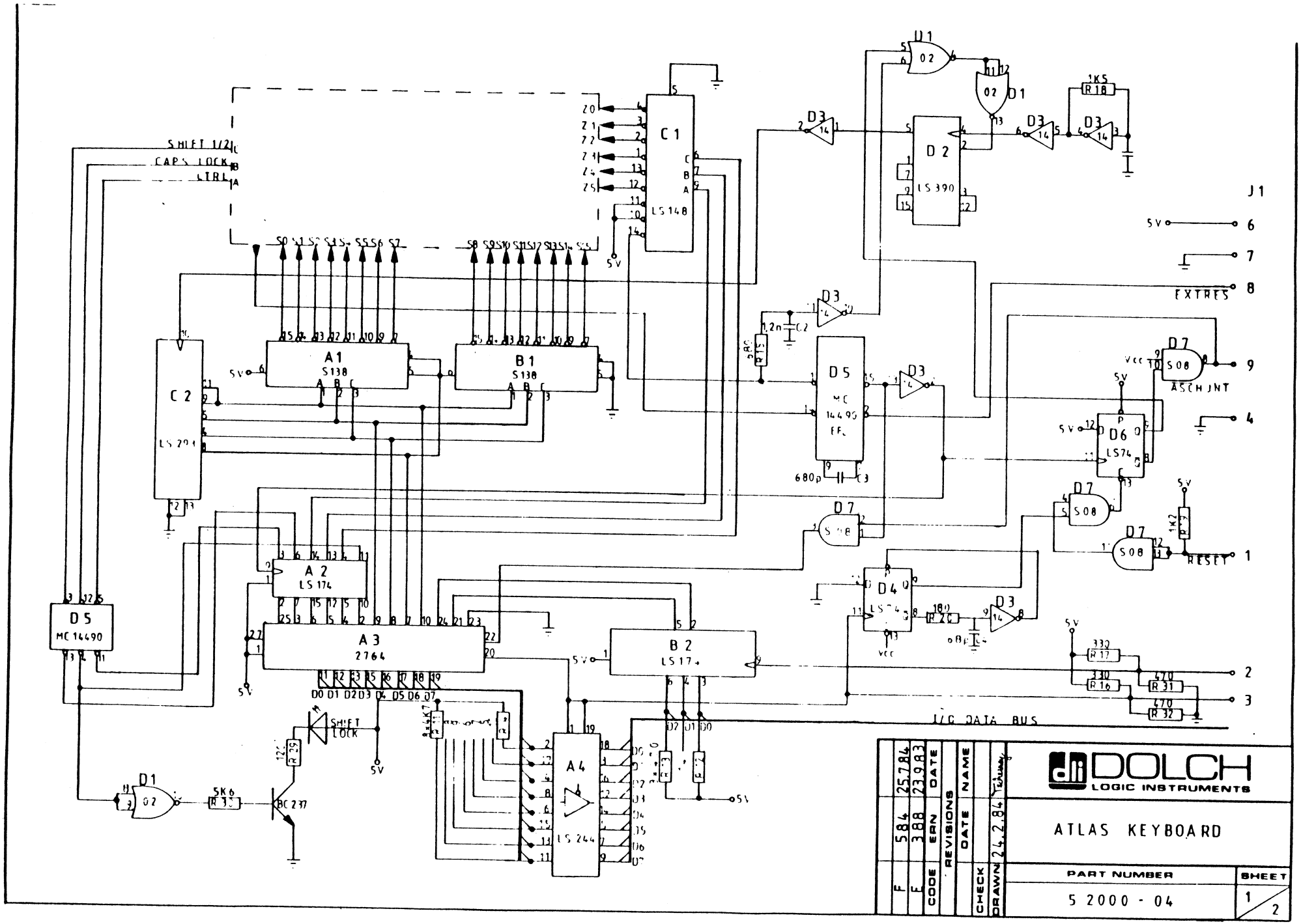
SHIFT 1/2
CAPS LOCK
CTRL
C1
LS148
C2
LS 291
A1
S138
B1
S138
A2
LS 174
A3
2764
A4
LS 244
B2
LS 174
D2
LS 390
D5
MC 14490
D6
LS74
D7
S08
D4
LS74
D1
02
D3
14
J1
EXTRES
ASCH JNT
RESET
I/O DATA BUS
SHIFT LOCK
BC 237
5K6
1K5
1K2
330
470
680p
1,2n
5V
DOLCH
LOGIC INSTRUMENTS
ATLAS KEYBOARD
PART NUMBER
5 2000 - 04
SHEET
1
2
CODE
ERN
DATE
REVISIONS
NAME
CHECK
DRAWN
24.2.84

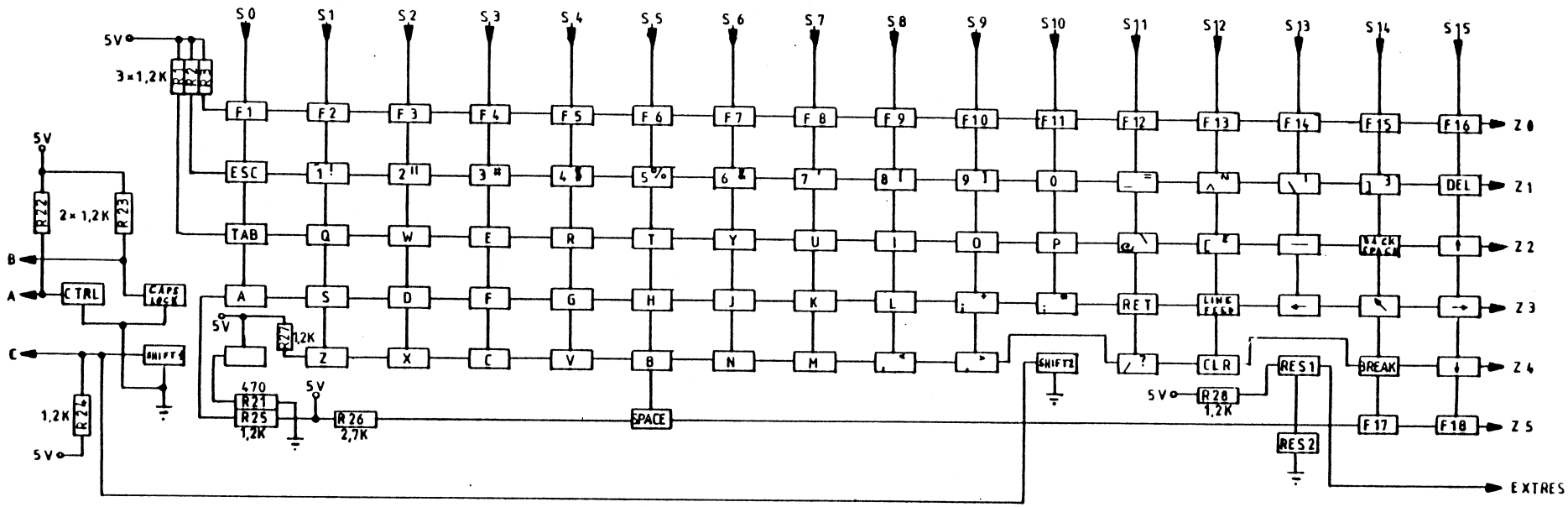

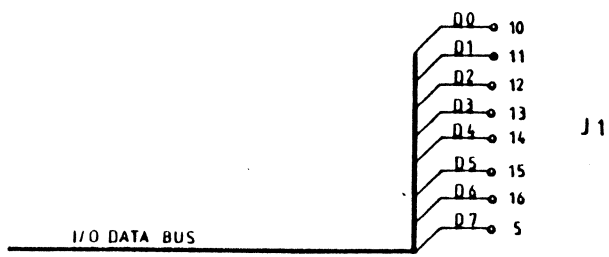

F	584	25 7 84	
E	386	23.9.83	
CODE	ERN	DATE	REVISIONS
			NAME
			DATE
CHECK			
DRAWN	22.2.84		

DOLCH LOGIC INSTRUMENTS

ATLAS KEYBOARD

PART NUMBER: 5 2000 - 04

SHEET: 2/2

QTY	DLI PART NO.	DESCRIPTION	DESIGNATION
1	52000 - 05	PC-BOARD Rev. D	
1	JPC 010 MM	Stiftleiste 10p. gerade	
1	SK 01 - 01 06	Taste schwarz 1	
1	" - 02 "	" 2	
1	" - 03 "	" 3	
1	" - 04 "	" 4	
1	" - 05 "	" 5	
1	" - 06 "	" 6	
1	" - DG "	Taste dunkelgrau	

	15.1.84	DATE			NAME	
	4.1.84					
	442	ERN	REVISIONS		DATE	
D	C	CODE			CHECK	DRAWN

DOLCH LOGIC INSTRUMENTS

PART LIST

SOFTKEYBOARD

PART NUMBER	SHEET
52000 - 05	

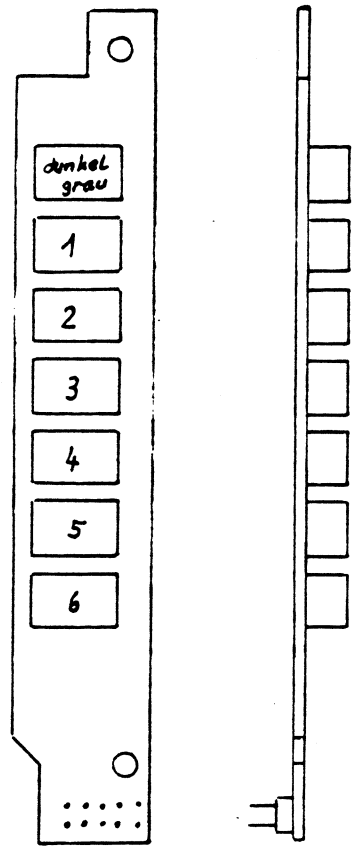

		22.2.84	DATE	NAME	
		BRN	REVISIONS	DATE	
		CODE		CHECK	
				DRAWN	22.2.84

DOLCH LOGIC INSTRUMENTS

SOFTKEYBOARD

PART NUMBER	SHEET
S 2000-05	1/1

QTY	DLI PART NO.	DESCRIPTION	DESIGNATION
3		74LS00	IC A4, A10, B22
4		74LS04	IC A9, B20, D7, D26
3		74LS08	IC B17, D2, C12
3		74LS20	IC B13, B27, D8
4		74LS32	IC B15, , D4, D5, D6
6		74LS74	IC A12, B14, B16, D1, D3, C21
2		74LS86	IC A3, A6
1		74LS123	IC A11
1		74LS125	IC A1
4		74LS138	IC C9, C13, C14, D9
1		74LS139	IC C20
1		74LS151	IC D11
3		74LS157	IC C6, C7, C8
1		74LS163	IC C16
1		74LS164	IC D16
2		74LS166	IC B7, B10
1		74LS174	IC D10
5		74LS244	IC A13, A17, B6, B23, D17
2		74LS245	IC , C11, C17
2		74LS367	IC B24, D12
12		74LS374	B1-B5, B8, B9, B11, B12, D13, D14, D15
1		74LS393	IC A7
1		74S08	IC B19
1		74S04	IC A8
2		74S32	IC A5, B18
1		74S153	IC A2
2		74S157	IC C18, C19
2		2732 A-2	IC C4, C5
2		2764K-3 (INTEL)	IC A15, A16
1		4028	IC C15
8	82 64-20	oder 4164-20	IC D18, 19, 20, 21, 22, 23, 24, 25

17.4.84	R15.8.83	10.8.1	24.3.85	DATE	NAME	B. RENER	DOLCH LOGIC INSTRUMENTS
5.11	383			FAN REVISIONS	DATE	15.8.83	PART LIST ATLAS DISPLAY SYSTEM CPU & INTERFACE - PART
	E	1	C	B	CODE	CHECK / DRAWN	PART NUMBER: 5-2000-06 Rev.B — SHEET 1/4

21. JUNI 1983

QTY	DLI PART NO.	DESCRIPTION	DESIGNATION
3		6116LP-3	IC C1, C2, C3
1		MC6845	IC C10 (CRTC)
1		Z80B CPU	IC A18
32		IC Sockel 14 pol.	
29		IC Sockel 16 pol.	
20		IC Sockel 20 pol.	
5		IC Sockel 24 pol.	
2		IC Sockel 28 pol.	
2		IC Sockel 40 pol.	
2		Anti Wärme Scheiben TO5	U1, Q5

							DOLCH LOGIC INSTRUMENTS
							PART LIST ATLAS DISPLAY SYSTEM CPU & INTERFACE-PART
							PART NUMBER / SHEET
							5-2000-06 Rev.B 2/4

DRAWN A. BIRK 17.8.82 — CHECK — DATE — NAME — REVISIONS — CODE — DATE 24.3.83 — ERN — DATE 14.8.83 — A.Ki.

QTY	DLI PART NO.	DESCRIPTION	DESIGNATION
1		12,5 MHZ Quarz	Y 1
1		6MHZ Quarz	Y 2
3		MPS 3640 TRANSISTOR	Q 6,1,2
1		2N3725	Q5
1		MPS2369	Q4
1		78M06 TO39	U1
9		10µF/25V tantal	C8, C11
66		22nF Vielschicht	C1, C2,
2		390pF	C5, C6
2		180pF	C12, C13
1		220pF	C4
1		100pF	C11
1		120pF	C10
3		39pF	C14, C15, C3
2		22pF	C7,8
1		1µF/25V Tantal	C17
1		10nF	C16
1		1N4148	VR 1
4		4 x 22Ω 8 PIN	R 40, 41, 42, 43
4		22Ω	R 36, 37, 38, 44
1		33Ω	R 21
1		68Ω	R 17
7		220Ω	R 23, 24, 27, 28, 29, 45, 47
1		270Ω	R 46
1		330Ω	R 14
1		470Ω	R 20

12.4.84	14.8.83	20.7.83	24.5.83	DATE	NAME
5M	3.83			FDN	DATE
F	E	D	C	CODE	REVISIONS

CHECK
DRAWN 15.8.82 D. Bron

DOLCH LOGIC INSTRUMENTS

PART LIST
ATLAS DISPLAY SYSTEM
CPU & INTERFACE - PART

PART NUMBER: 5 - 2000 - 06 Rev. B

SHEET 3/4

24. JUNI 1983

QTY	DLI PART NO.	DESCRIPTION	DESIGNATION
1		510Ω	R13
4		680Ω	R31,32,33,34
4		820Ω	R1,2,12,22
1		1k2Ω	R48
10		2k2Ω	R5,7,9,10,15,18,19,30,35,39
4		2k7Ω	R4,8,25,26
1		3k3Ω	R16
1		3k9Ω	R11
2		5k6Ω	R3,6
1		470Ω TRIMMER	P2
1		4k7Ω TRIMMER	P1
2		VG Leiste 64p. abgewink.	J1,2
1		Stiftleiste 14pol. gew.	J4
1		Stiftleiste 16pol. gew.	J5
13		Stiftleiste 3pol. gerade	
13		Jumper 2p.	
4		Hohlniet	
1	5-2000-06	PC Board Rev.: C	
1		Transistorverbindungsblech	∞
2		Auswerfer	
2	Kreuzschlitzsenkschraube	M 2,5x6 DIN 965	

19.4.84	14.9.83	30.6.83	24.3.83	DATE	NAME	D. Bock
5-11	3.83			ERN REVISIONS	DATE	15.9.82
F	E	D	C	B	CHECK	DRAWN

DOLCH LOGIC INSTRUMENTS

PART LIST
ATLAS DISPLAY SYSTEM
CPU & INTERFACE-PART

PART NUMBER: 5-2000-06 Rev.B

SHEET 4/4

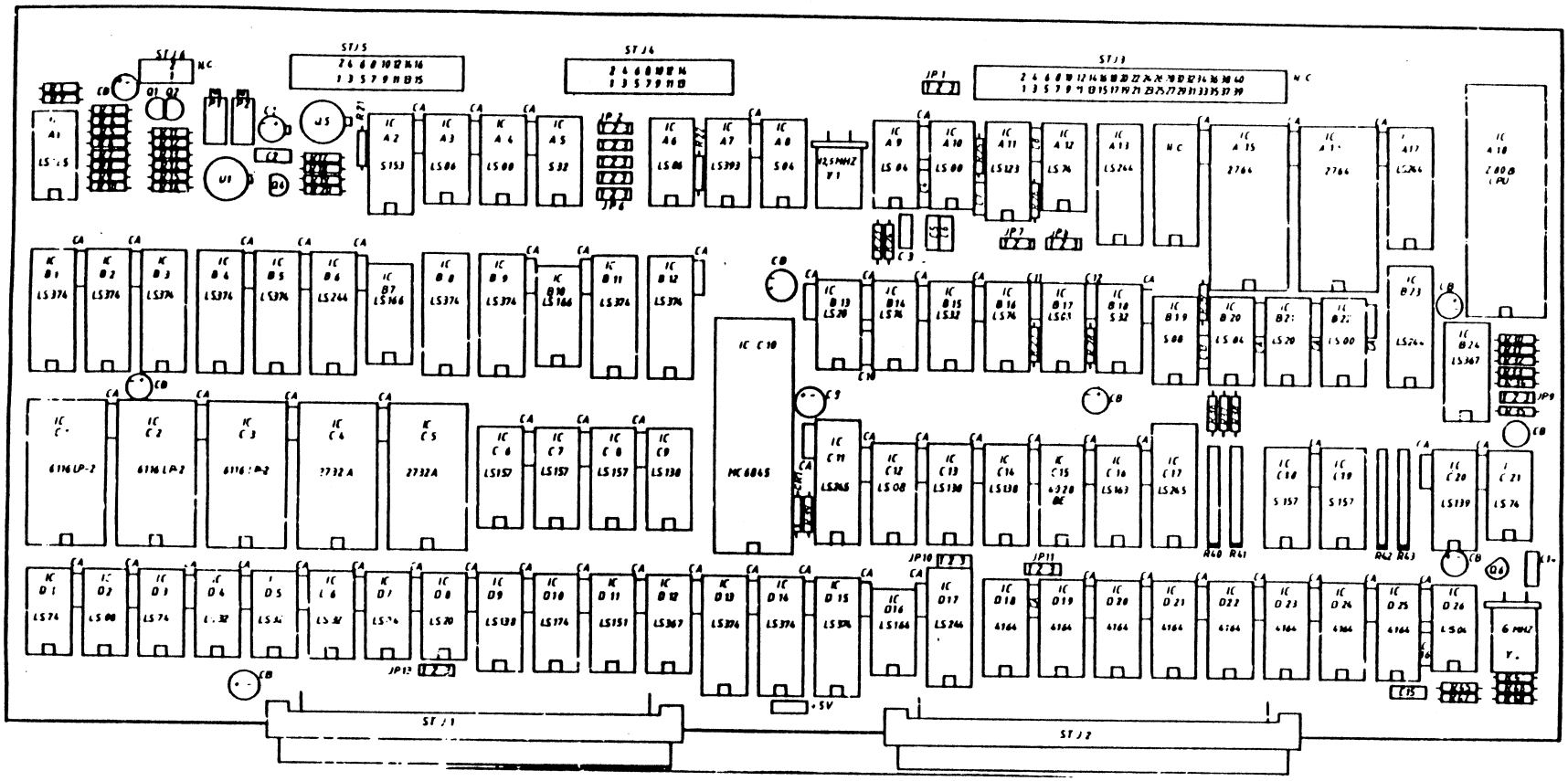

ATLAS Display System

S 2000 - 36

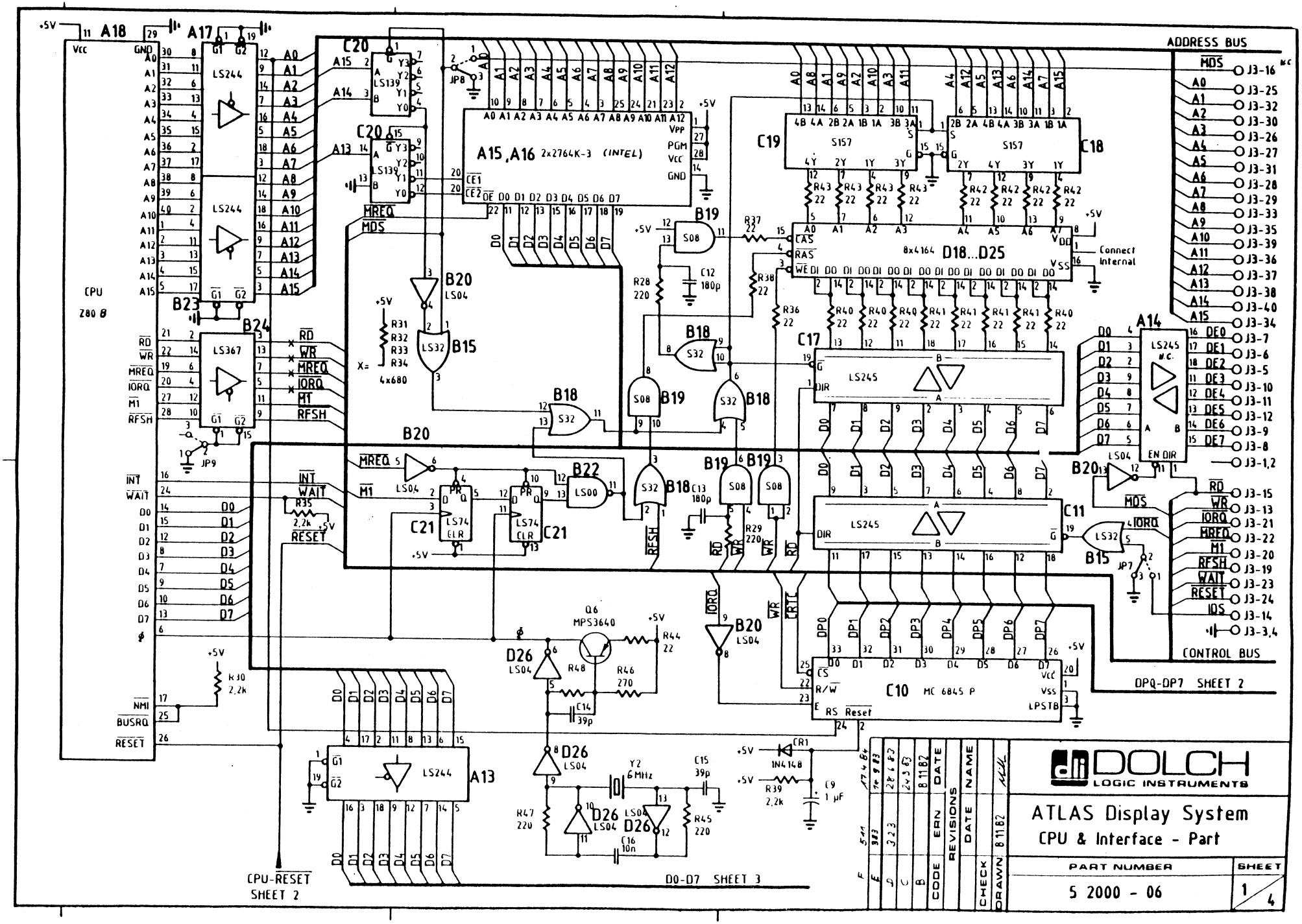
ADDRESS BUS
CONTROL BUS
CPU
Z80 B
A18
A17
LS244
LS367
C20
LS139
A15,A16 2x2764K-3 (INTEL)
C19
C18
S157
D18...D25
8x4164
Connect Internal
C17
C11
LS245
A14
LS245 N.C.
EN DIR
C10 MC 6845 P
B15
B20
LS04
B19
S08
B18
S32
B22
LS00
C21
LS74
D26
LS04
Q6 MPS3640
Y2 6MHz
A13
LS244
CPU-RESET SHEET 2
D0-D7 SHEET 3
DPQ-DP7 SHEET 2
DOLCH LOGIC INSTRUMENTS
ATLAS Display System
CPU & Interface - Part
PART NUMBER
5 2000 - 06
SHEET
1/4
CODE
DATE
NAME
REVISIONS
CHECK
DRAWN

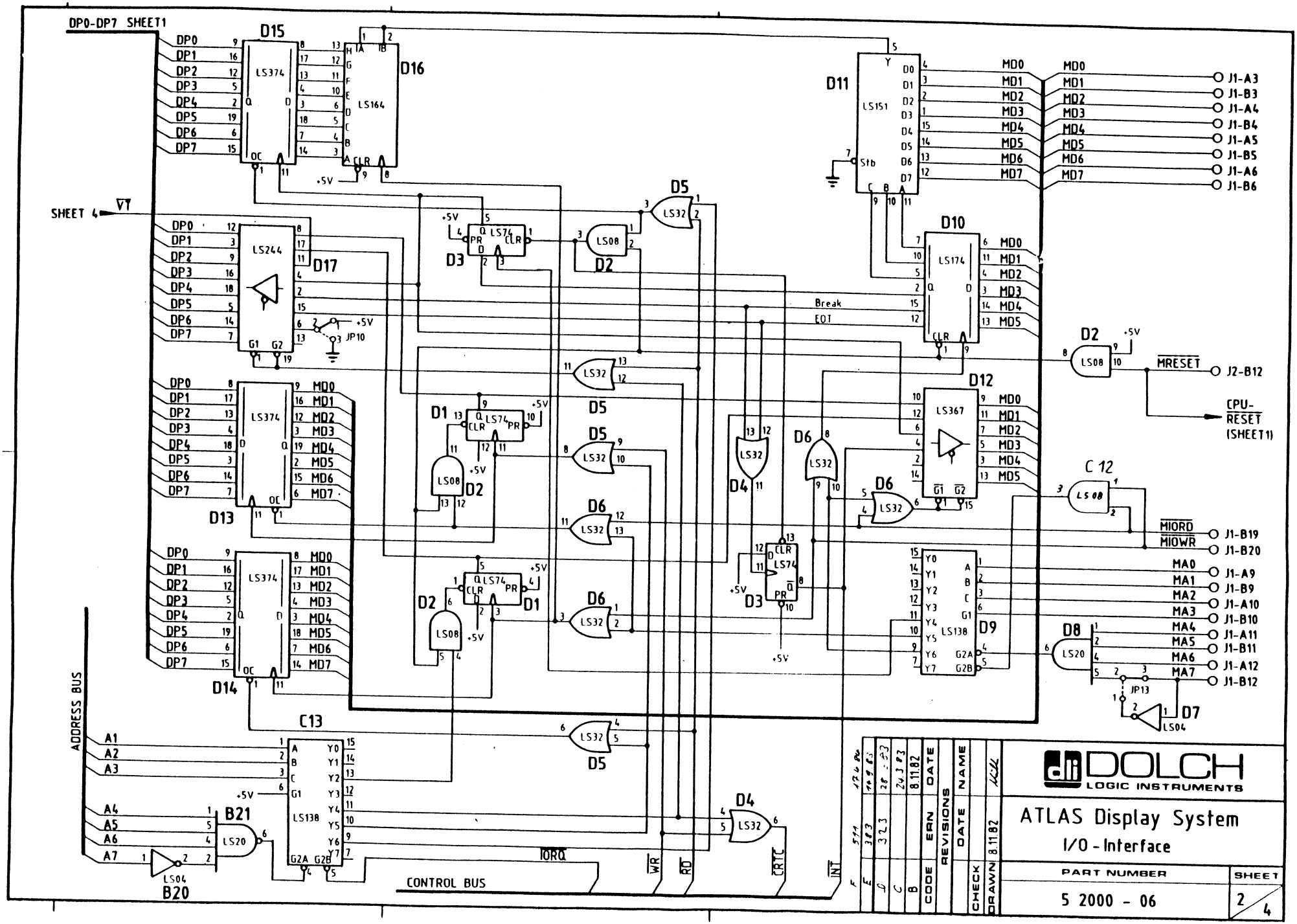
DP0-DP7 SHEET1
SHEET 4
VT
D15
LS374
D16
LS164
D11
LS151
D10
LS174
D12
LS367
D13
D14
D17
LS244
JP10
D1
D2
D3
D4
D5
D6
D7
D8
D9
LS08
LS32
LS74
LS138
LS20
LS04
C 12
C13
B21
B20
JP13
Break
EOT
MRESET
CPU-RESET (SHEET1)
MIORD
MIOWR
J1-A3
J1-B3
J1-A4
J1-B4
J1-A5
J1-B5
J1-A6
J1-B6
J2-B12
J1-B19
J1-B20
J1-A9
J1-B9
J1-A10
J1-B10
J1-A11
J1-B11
J1-A12
J1-B12
ADDRESS BUS
CONTROL BUS
IORQ
WR
RD
CRTC
INT
DOLCH
LOGIC INSTRUMENTS
ATLAS Display System
I/O - Interface
PART NUMBER
5 2000 - 06
SHEET
2/4
CODE
ERN
DATE
REVISIONS
NAME
DATE
CHECK
DRAWN
8.11.82

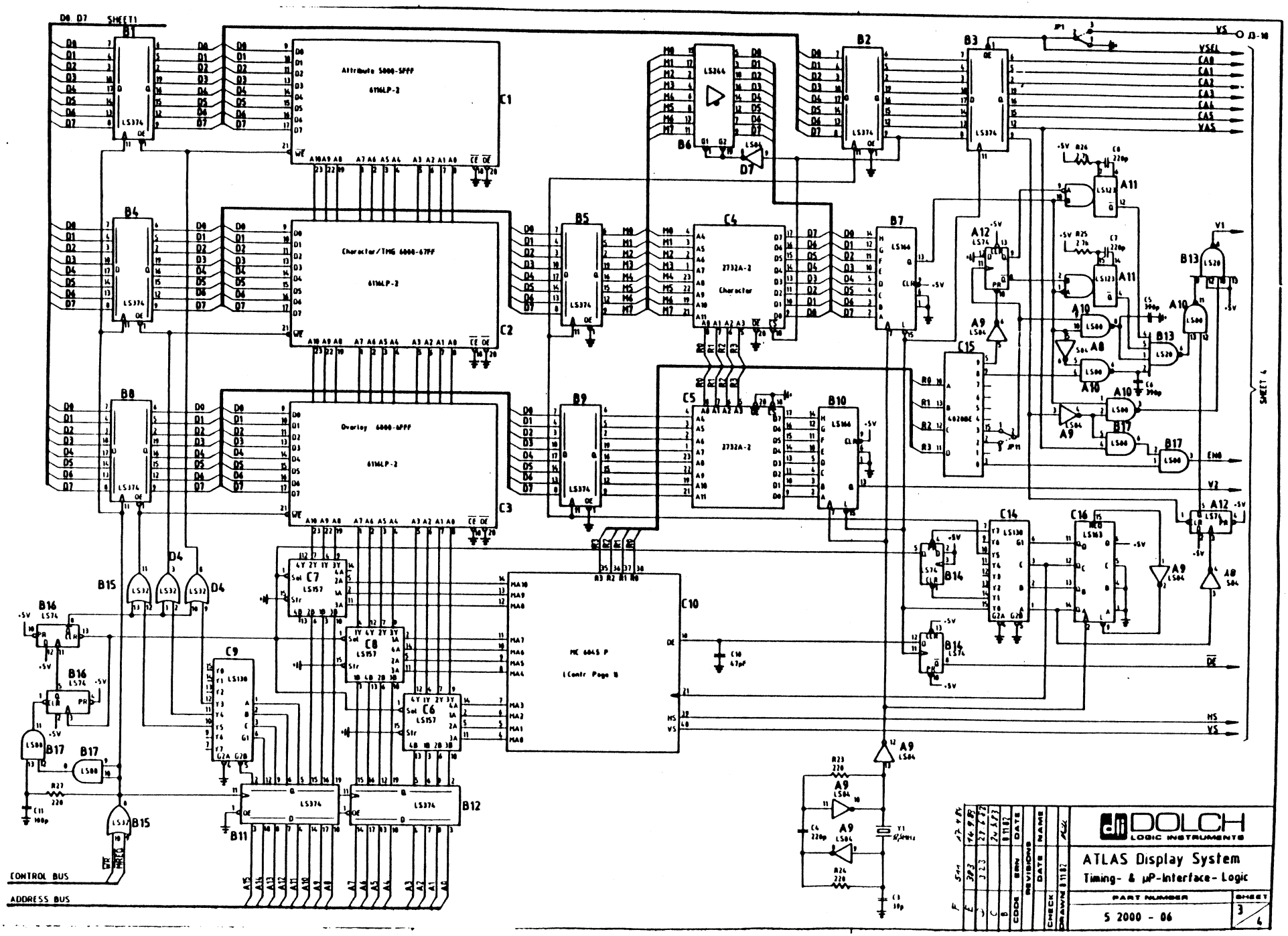
SHEET 1
Attribute 5000-5FFF
6116LP-2
Character/TMG 6000-67FF
Overlay 6000-6FFF
2732A-2
Character
MC 6845 P
(Contr Page 8)
CONTROL BUS
ADDRESS BUS
SHEET 4
DOLCH
LOGIC INSTRUMENTS
ATLAS Display System
Timing- & µP-Interface- Logic
PART NUMBER
S 2000 - 06
SHEET
3/4

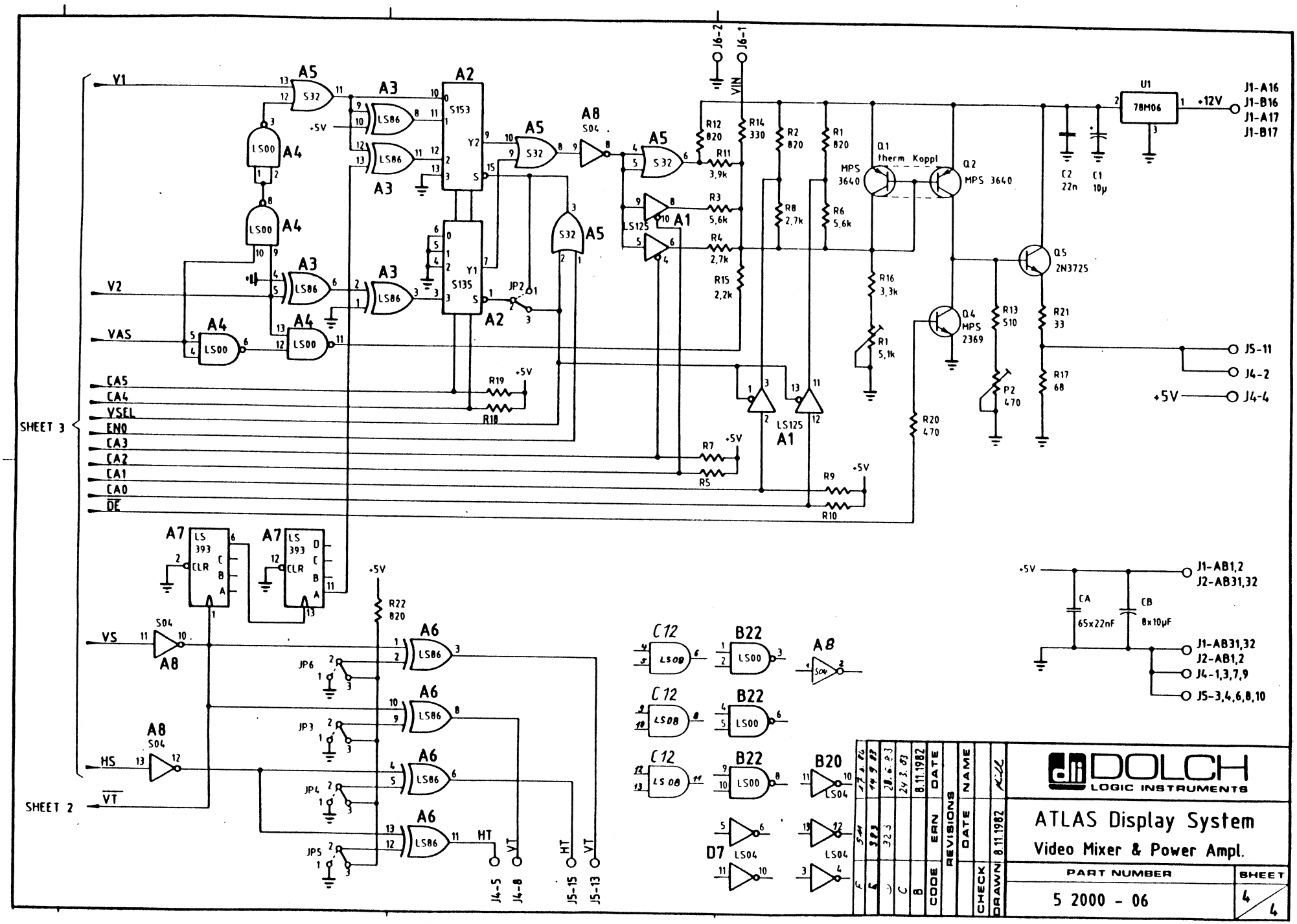
V1
V2
VAS
CA5
CA4
VSEL
ENO
CA3
CA2
CA1
CA0
DE
SHEET 3
VS
HS
VT
SHEET 2
A5 S32
A3 LS86
A2 S153
A2 S135
A4 LS00
A8 S04
A1 LS125
A7 LS 393
A6 LS86
C12 LS08
B22 LS00
B20 LS04
D7 LS04
JP2
JP3
JP4
JP5
JP6
R19
R18
R7
R5
R9
R10
R22 820
HT
J4-5
J4-8
J5-15
J5-13
J6-2
J6-1
VIN
R12 820
R14 330
R11 3,9k
R3 5,6k
R4 2,7k
R15 2,2k
R2 820
R8 2,7k
R1 820
R6 5,6k
R16 3,3k
R1 5,1k
R20 470
Q1 therm Koppl
MPS 3640
Q2 MPS 3640
Q4 MPS 2369
Q5 2N3725
R13 510
P2 470
R21 33
R17 68
C2 22n
C1 10µ
U1 78M06
+12V
J1-A16
J1-B16
J1-A17
J1-B17
J5-11
J4-2
+5V
J4-4
CA 65x22nF
CB 8x10µF
J1-AB1,2
J2-AB31,32
J1-AB31,32
J2-AB1,2
J4-1,3,7,9
J5-3,4,6,8,10
DOLCH
LOGIC INSTRUMENTS
ATLAS Display System
Video Mixer & Power Ampl.
PART NUMBER
5 2000 - 06
SHEET
4/4
REVISIONS
DATE
NAME
CHECK
DRAWN 8.11.1982
CODE
ERN
DATE
8.11.1982

Pos.	Qty.	Description	DLI Part No.	Designation
1	1	AC-Board	5-2000-07	
2	8	Vielfachstecker	350 789-1	3polig AMP

B	25.02.83	Schr.		
CODE	ERN	DATE	NAME	
	REVISIONS			
		DATE		
CHECK				
DRAWN	29.03.83	Schr.		

DOLCH LOGIC INSTRUMENTS

Part List
AC-Board

PART NUMBER	SHEET
5-2000-07	1/1

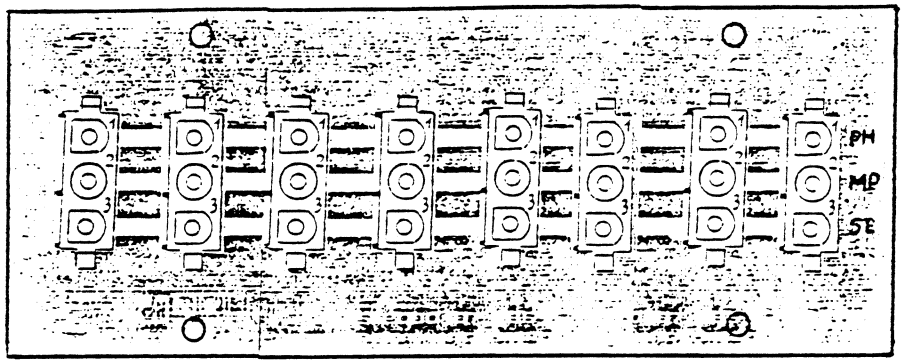

hierzu Stückliste gleicher Nr.

Pin 1 immer PH

B					
A					
CODE	ERN	DATE	REVISIONS	DATE	NAME
				CHECK	
				DRAWN	

DOLCH LOGIC INSTRUMENTS

ATLAS
AC - BOARD
Gruppe A

PART NUMBER	SHEET
5 2000 - 07	1/1

QTY	DLI PART NO.	DESCRIPTION	DESIGNATION
1	5 2000 - 08	DC - BOARD	
9	350 786 - 1	Vielfachstecker	2 polig AMP
26	JPC 001M01	Flachstecker GST 6,3	
1		47 µF	C1
1		DIODE SB520	CR1
1	AFX 0003	Sicherungsfassung	
1		Sicherung-Microfuse 800mA	F1

		12.1.84	DATE	NAME	
		465	BRN	REVISIONS	DATE	29.3.84	BERN
		G	CODE		CHECK	DRAWN	

DOLCH LOGIC INSTRUMENTS

PART LIST
ATLAS
DC - BOARD

PART NUMBER	SHEET
5 2000 - 08	1/1

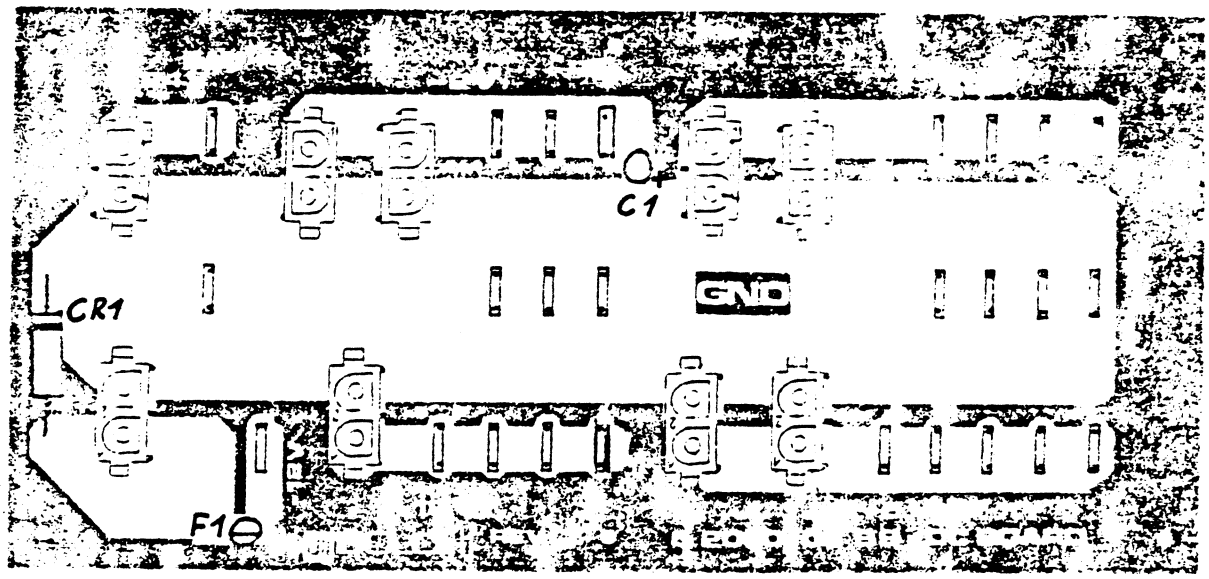

		17.1.84	DATE	NAME	12.1.84
		465	BRN	DATE	29.1.84
	C	CODE	REVISIONS	CHECK	DRAWN

DOLCH LOGIC INSTRUMENTS

ATLAS
DC-BOARD

PART NUMBER	SHEET
5 2000 - 08	1/1

Pos.	Qty.	Description	DLI Part No.	Designation
1	1	74LS00		B14
2	1	74LS02		A19
3	2	74LS32		B12, D24
4	1	74LS86		C23
5	2	74LS138		A20, B19
6	2	74LS173		C25, D25
7	2	74LS174		D22, 23
8	3	74LS244		B22, D15, B21
9	4	74LS367		A17, 18, B17, 18
10	3	74LS390		C20, 21, 22
11	2	74LS641		B24, 23
12	4	74LS645		A23, 25, A22, 24
13	1	74S09		B13
14	2	74S138		A21, B20
15	1	74S151		D21
16	1	74S162		D20
17	1	7611		C24
18	1	10102		B9
19	1	10103		A13
20	1	10104		D4
21	1	10136		C6
22	1	10109		D5
23	4	10115		A6, 7, B6, 7
24	1	10116		D19
25	7	10124		B15, 16, C12, 14, 19, D19, 17

G	5C2	2.7.84	REVISIONS	NAME	DOLCH LOGIC INSTRUMENTS
F	495	26.1.84		DATE	Part List
E	324	14.9.83		CHECK	LINK - BOARD
	RIK	C		DRAWN	PART NUMBER: 5 - 2000 - 09
	CODE	ERN	DATE		SHEET: 1/4

Pos.	Qty.	Description	DLI Part No.	Designation
26	3	10125		C15, D13, 16
27	7	10131		A4,5, B4,5,6, C16, D15
28	1	10135		C17
29	2	10153		D2,8
30	1	10174		C18
31	4	10210		A8, C2,3,5
32	1	10231		D12
33	1	100136		A1
34	2	C-Trimmer 10-100pF		C12, C13
35	1	120pF		C15
36	1	390pF		C16
37	52	22nF		CA, CD, CF
38	2	F.k. 100nF		C1, C14
39	10	10µF		CB, CE, CG, C2, C3
40	1	Spule 0,33µH 72.01R300M		L1
41	1	Quarz 10MHz		Q1
42	2	Diode 1N4002		D1, D2
43	4	Stiftleiste 26pol. abgew.		J3,4,5,6

			2.7.84	DATE	
			26.1.84		
			14.9.83		
			5.8.83		
562			G	ERN	REVISIONS
449					
384					
G	P	E	Rev	CODE	

NAME		
DATE		
CHECK		
DRAWN	5.7.83	D. Geyer

DOLCH LOGIC INSTRUMENTS

Part List
LINK-BOARD

PART NUMBER	SHEET
5 2000 - 09	2/4

Pos.	Qty.	Description	DLI Part No.	Designation
44	2	Stiftleiste 50pol. gerade		J7,8
45	2	VG-Leiste 64pol. gew.		J1, J2
46	[illegible]	68 Ω		R_D
47	4	220 Ω		R_A
48	3	330 Ω		R_B, R6, R7
49	13	Netzwerke 4x68Ω 5pol.		R_D
50	2	" 4x220Ω 5pol.		R_A
51	2	" 4x330Ω 5pol.		R_B
52	2	" 4x1kΩ 5pol.		R_C
53	17	" 8x68Ω 9pol.		R_D
54	8	" 8x220Ω 9pol.		R_A
55	7	" 8x330Ω 9pol.		R_B
56	1	" 8x1kΩ 9pol.		R_C
57	6	IC-Sockel 14pol.		
58	54	IC-Sockel 16pol.		
59	9	IC-Sockel 20pol.		
60	1	IC-Sockel (3RM) 24pol.		
61	1	Leiterplatte	5-2000-09 Rev C	
	2	Auswerfer APC 0007		
	2	Senkschraube Kreuzschlitz	M2,5x6 DIN 965	

G	562	27.3.84	REVISIONS	NAME	DOLCH LOGIC INSTRUMENTS
F	459	24.1.84		DATE	Part List
E	394	14.9.83			LINK-BOARD
Rev	C	5.3.83			
CODE	ERN	DATE	CHECK		PART NUMBER / SHEET
			DRAWN	5.3.83 D. Brown	5 2000 - 09 / 3/4

QTY	DLI PART NO.	DESCRIPTION	DESIGNATION
1	4 2000 - 05 Rev. A	7611	C24

		27.7.84	DATE	NAME	
		563	BRN	REVISIONS	DATE	CHECK	DRAWN 5.7.84
		6	CODE				

DOLCH LOGIC INSTRUMENTS

PART LIST
LINK - BOARD
PROGRAMMABLE IC'S

PART NUMBER: 5 2000 - 09

SHEET: 4/4

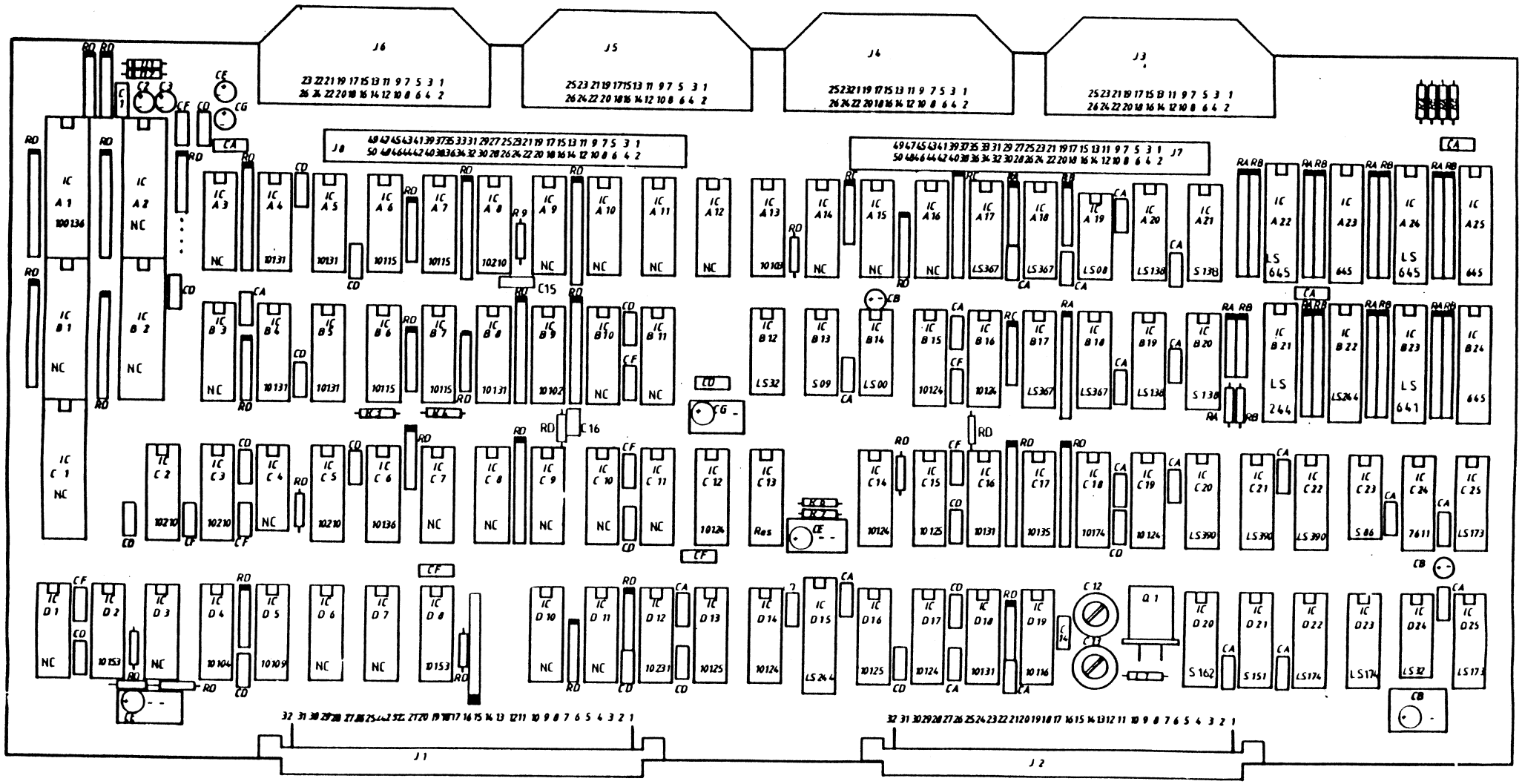

Bestückungsplan LINK BOARD P.N.NR.5-2000-09 DOLCH Jan.1983 Bruder

G	5.82	12.7.84					
F	4.59	16.8.84					
E	5.84	19.9.84					
CODE	BEN.	DATE	REVISIONS	DATE	NAME	CHECK	DRAWN

DOLCH LOGIC INSTRUMENTS

LINK BOARD

PART NUMBER: S 2000-09

SHEET: 1/1

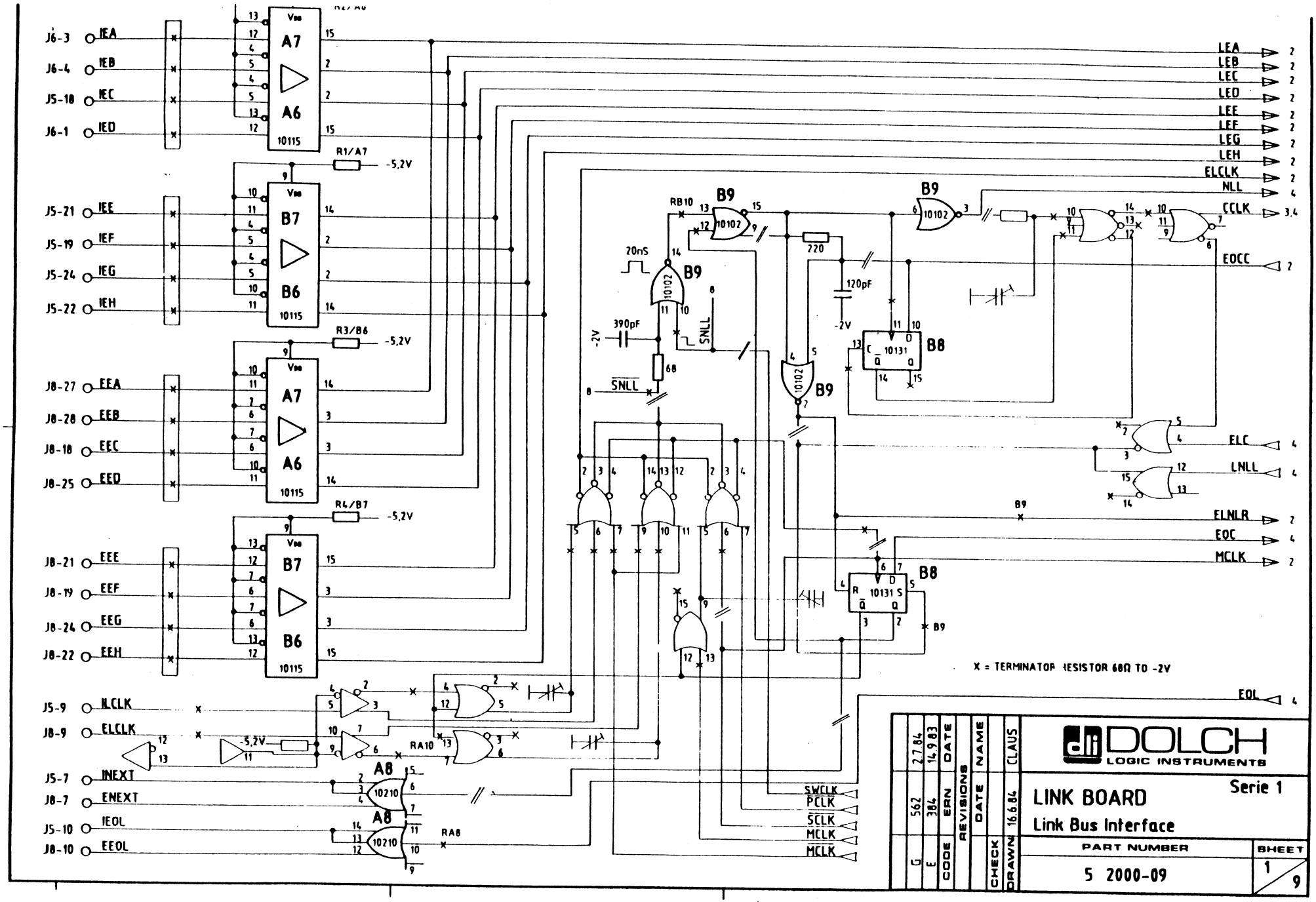
J6-3 IEA
J6-4 IEB
J5-18 IEC
J6-1 IED
J5-21 IEE
J5-19 IEF
J5-24 IEG
J5-22 IEH
J8-27 EEA
J8-28 EEB
J8-18 EEC
J8-25 EED
J8-21 EEE
J8-19 EEF
J8-24 EEG
J8-22 EEH
J5-9 ILCLK
J8-9 ELCLK
J5-7 INEXT
J8-7 ENEXT
J5-10 IEOL
J8-10 EEOL
A7
A6
B7
B6
10115
R1/A7
R3/B6
R4/B7
-5,2V
B9
10102
B8
10131
A8
10210
20nS
390pF
68
SNLL
RB10
RA10
RA8
220
120pF
-2V
LEA
LEB
LEC
LED
LEE
LEF
LEG
LEH
ELCLK
NLL
CCLK
EOCC
ELC
LNLL
ELNLR
EOC
MCLK
EOL
SWCLK
PCLK
SCLK
MCLK
X = TERMINATOR RESISTOR 68Ω TO -2V
DOLCH
LOGIC INSTRUMENTS
LINK BOARD
Serie 1
Link Bus Interface
PART NUMBER
5 2000-09
SHEET
1
9
CLAUS
16.6.84
CHECK
DRAWN
NAME
DATE
REVISIONS
ERN
CODE
562
384
G
E
2.7.84
14.9.83

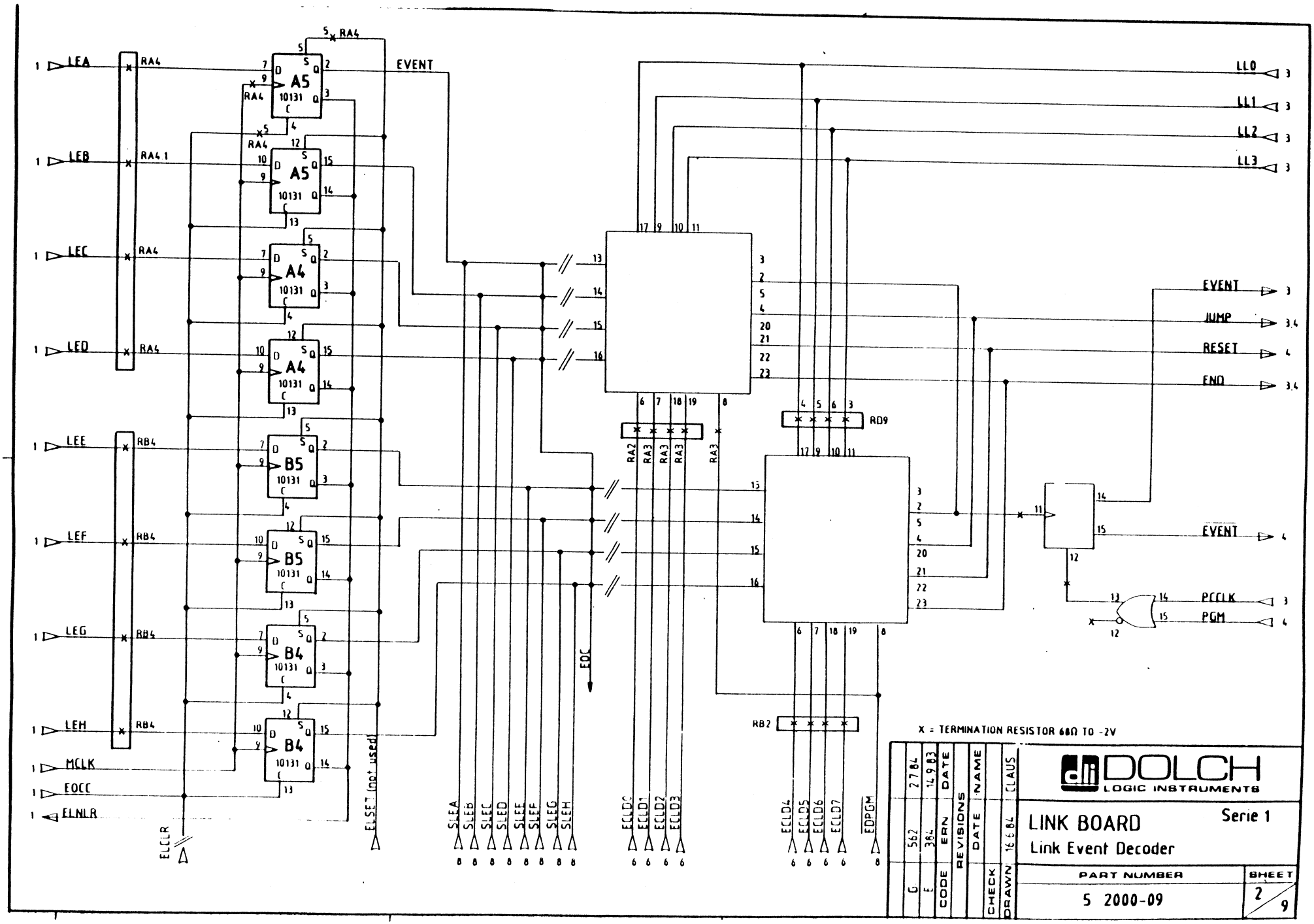
LEA
LEB
LEC
LED
LEE
LEF
LEG
LEH
MCLK
EOCC
ELNLR
ELCLR
RA4
RA4.1
RB4
A5
A4
B5
B4
10131
EVENT
ELSET (not used)
SLEA
SLEB
SLEC
SLED
SLEE
SLEF
SLEG
SLEH
EOC
ECLD0
ECLD1
ECLD2
ECLD3
ECLD4
ECLD5
ECLD6
ECLD7
EDPGM
RA2
RA3
RD9
RB2
LL0
LL1
LL2
LL3
EVENT
JUMP
RESET
END
EVENT
PCCLK
PGM
X = TERMINATION RESISTOR 68Ω TO -2V
DOLCH
LOGIC INSTRUMENTS
LINK BOARD
Link Event Decoder
Serie 1
PART NUMBER
5 2000-09
SHEET
2/9
CODE
REVISIONS
DATE
NAME
CHECK
DRAWN
CLAUS
16 6 84
G 562
E 384
2 7 84
14 9 83

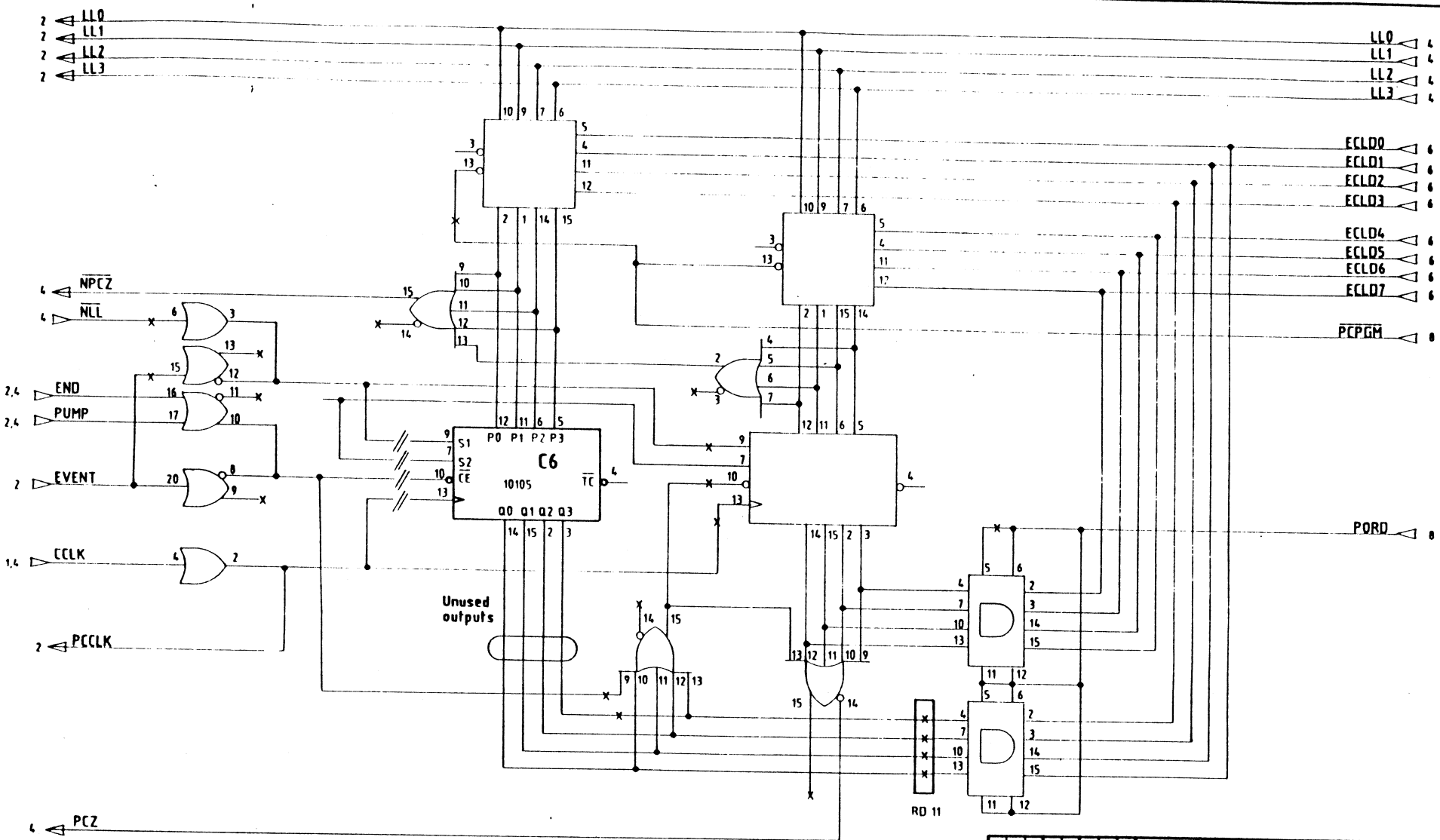

X = TERMINATION RESISTOR TO -2V

G	562	2.7.84	CLAUS
F	384	14.9.84	
CODE	ERN	DATE	NAME
REVISIONS			
CHECK			
DRAWN		16.6.84	

DOLCH LOGIC INSTRUMENTS

LINK BOARD Serie 1

Pass Counter

PART NUMBER 5 2000-09

SHEET 3/9

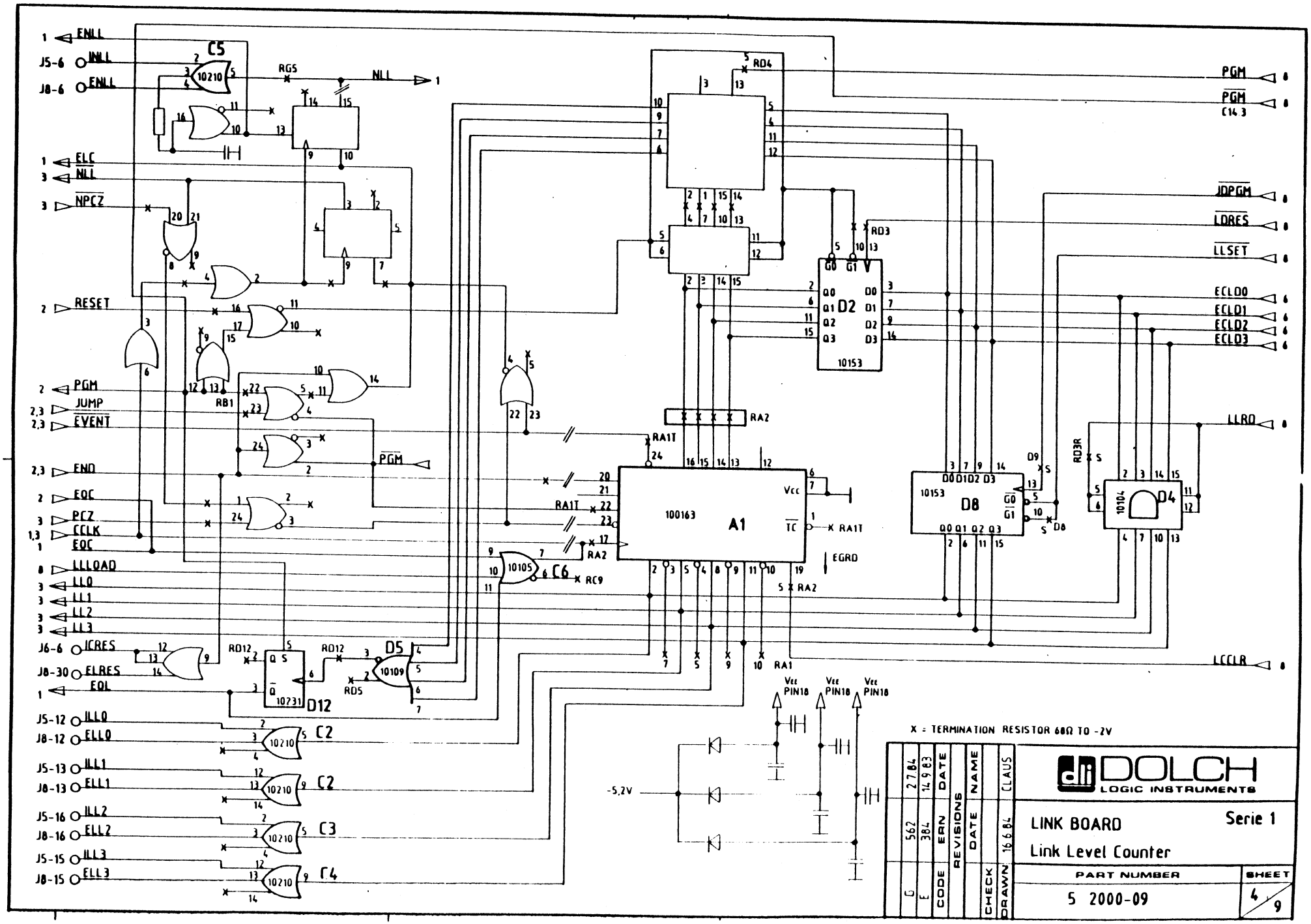
ENLL
J5-6 INLL
J8-6 ENLL
C5
10210
RG5
NLL
ELC
NLL
NPCZ
RESET
PGM
JUMP
EVENT
END
EOC
PCZ
CCLK
EOC
LLLOAD
LL0
LL1
LL2
LL3
J6-6 ICRES
J8-30 ELRES
EOL
RB1
PGM
RD12
D12
10231
RD5
D5
10109
J5-12 ILL0
J8-12 ELL0
J5-13 ILL1
J8-13 ELL1
J5-16 ILL2
J8-16 ELL2
J5-15 ILL3
J8-15 ELL3
C2
C3
C4
RD4
RD3
D2
10153
RA2
RA1T
100163
A1
Vcc
TC
EGRD
10105
C6
RC9
RA1
PGM
PGM
C14 3
JDPGM
LDRES
LLSET
ECLD0
ECLD1
ECLD2
ECLD3
LLRD
LCCLR
D8
10153
D9
RD3R
10104
D4
Vcc PIN18
-5,2V
X = TERMINATION RESISTOR 68Ω TO -2V
DOLCH
LOGIC INSTRUMENTS
LINK BOARD
Link Level Counter
Serie 1
PART NUMBER
5 2000-09
SHEET
4 / 9
CODE
REVISIONS
DATE
NAME
CHECK
DRAWN
CLAUS
16.6.84
ERN
DATE
562
384
27.8.84
14.9.83

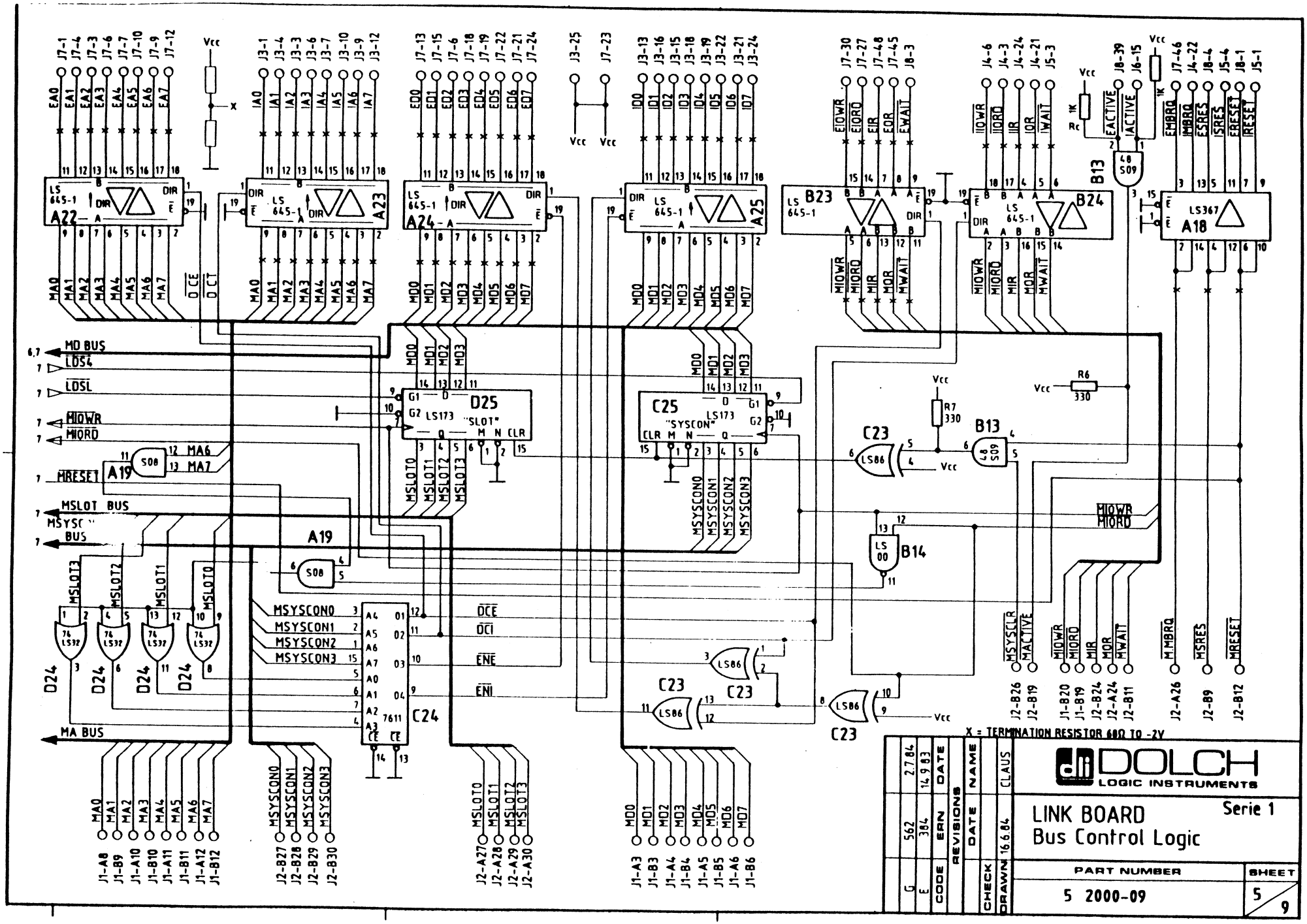
A22
A23
A24
A25
B23
B24
B13
A18
A19
D25
"SLOT"
C25
"SYSCON"
C24
D24
B14
C23
R6
330
R7
330
MD BUS
MA BUS
MSLOT BUS
MSYSC BUS
X = TERMINATION RESISTOR 68Ω TO -2V
DOLCH
LOGIC INSTRUMENTS
LINK BOARD
Bus Control Logic
Serie 1
PART NUMBER
5 2000-09
SHEET
5
9
REVISIONS
CODE
ERN
DATE
NAME
CLAUS
CHECK
DRAWN
16 6 84

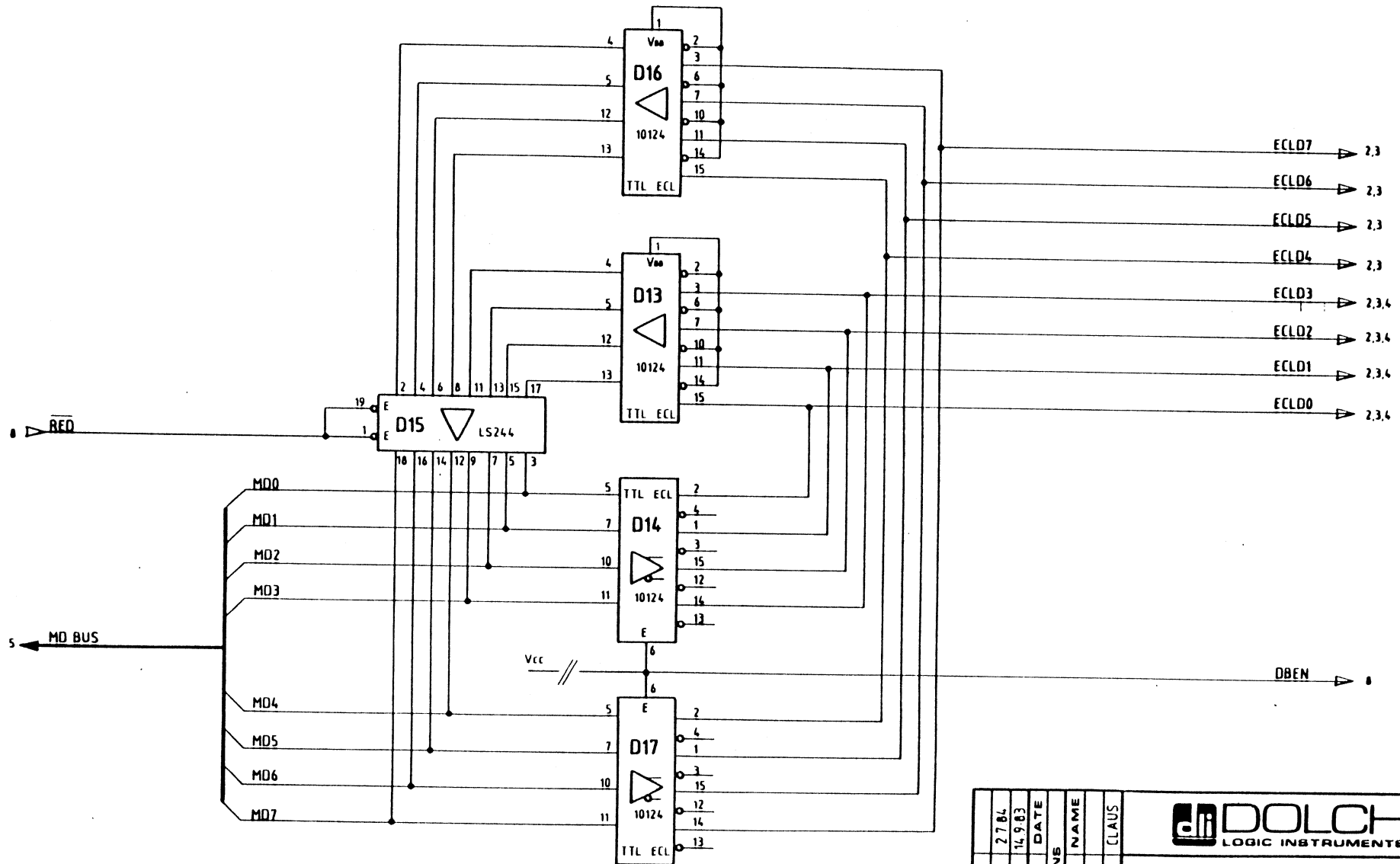

G	562	27.7.84	
E	384	14.9.83	
CODE	ERN	DATE	REVISIONS
CHECK			DATE / NAME
DRAWN	16.6.84	CLAUS	

DOLCH LOGIC INSTRUMENTS

LINK BOARD Serie 1

Bidirectional ECL / TTL Data Bus Conversion

PART NUMBER: 5 2000-09

SHEET: 6/9

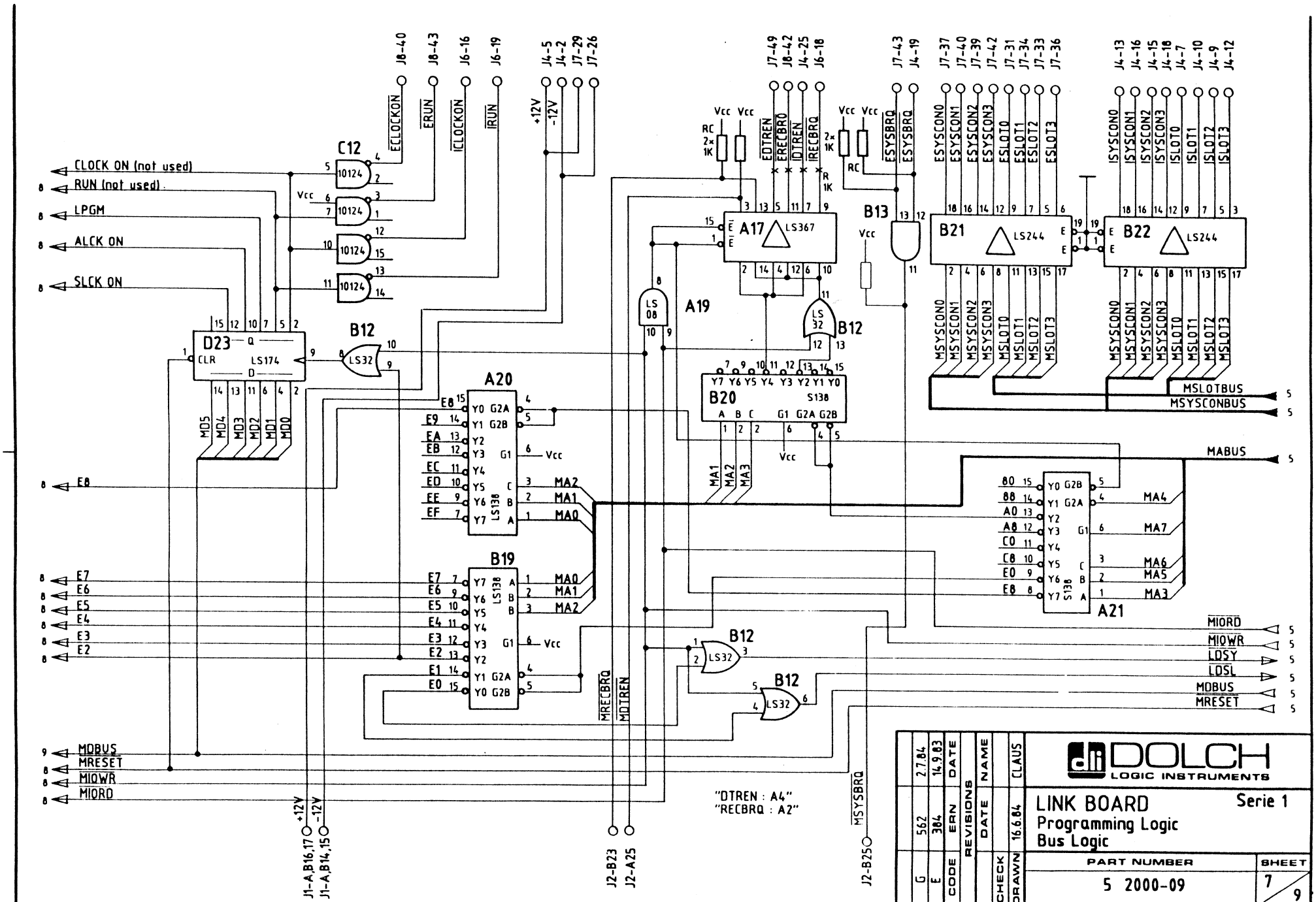
CLOCK ON (not used)
RUN (not used)
LPGM
ALCK ON
SLCK ON
E8
E7
E6
E5
E4
E3
E2
MDBUS
MRESET
MIOWR
MIORD
C12
10124
D23
LS174
CLR
MD5
MD4
MD3
MD2
MD1
MD0
B12
LS32
A20
LS138
B19
A17
LS367
A19
LS 08
B20
S138
B13
B21
LS244
B22
A21
S138
ECLOCKON
ERUN
ICLOCKON
IRUN
+12V
-12V
J8-40
J8-43
J6-16
J6-19
J4-5
J4-2
J7-29
J7-26
J7-49
J8-42
J4-25
J6-18
J7-43
J4-19
J7-37
J7-40
J7-39
J7-42
J7-31
J7-34
J7-33
J7-36
J4-13
J4-16
J4-15
J4-18
J4-7
J4-10
J4-9
J4-12
EDTREN
ERECBRQ
IDTREN
IRECBRQ
ESYSBRQ
ESYSCON0
ESYSCON1
ESYSCON2
ESYSCON3
ESLOT0
ESLOT1
ESLOT2
ESLOT3
ISYSCON0
ISYSCON1
ISYSCON2
ISYSCON3
ISLOT0
ISLOT1
ISLOT2
ISLOT3
MSYSCON0
MSYSCON1
MSYSCON2
MSYSCON3
MSLOT0
MSLOT1
MSLOT2
MSLOT3
MSLOTBUS
MSYSCONBUS
MABUS
MA0
MA1
MA2
MA3
MA4
MA5
MA6
MA7
MIORD
MIOWR
LDSY
LDSL
MDBUS
MRESET
MRECBRQ
MDTREN
MSYSBRQ
J1-A,B16,17
J1-A,B14,15
J2-B23
J2-A25
J2-B25
"DTREN : A4"
"RECBRQ : A2"
DOLCH
LOGIC INSTRUMENTS
LINK BOARD
Programming Logic
Bus Logic
Serie 1
PART NUMBER
5 2000-09
SHEET
7/9
REVISIONS
NAME
DATE
CODE
ERN
DATE
CHECK
DRAWN
CLAUS
16.6.84
G
562
2.7.84
E
384
14.9.83

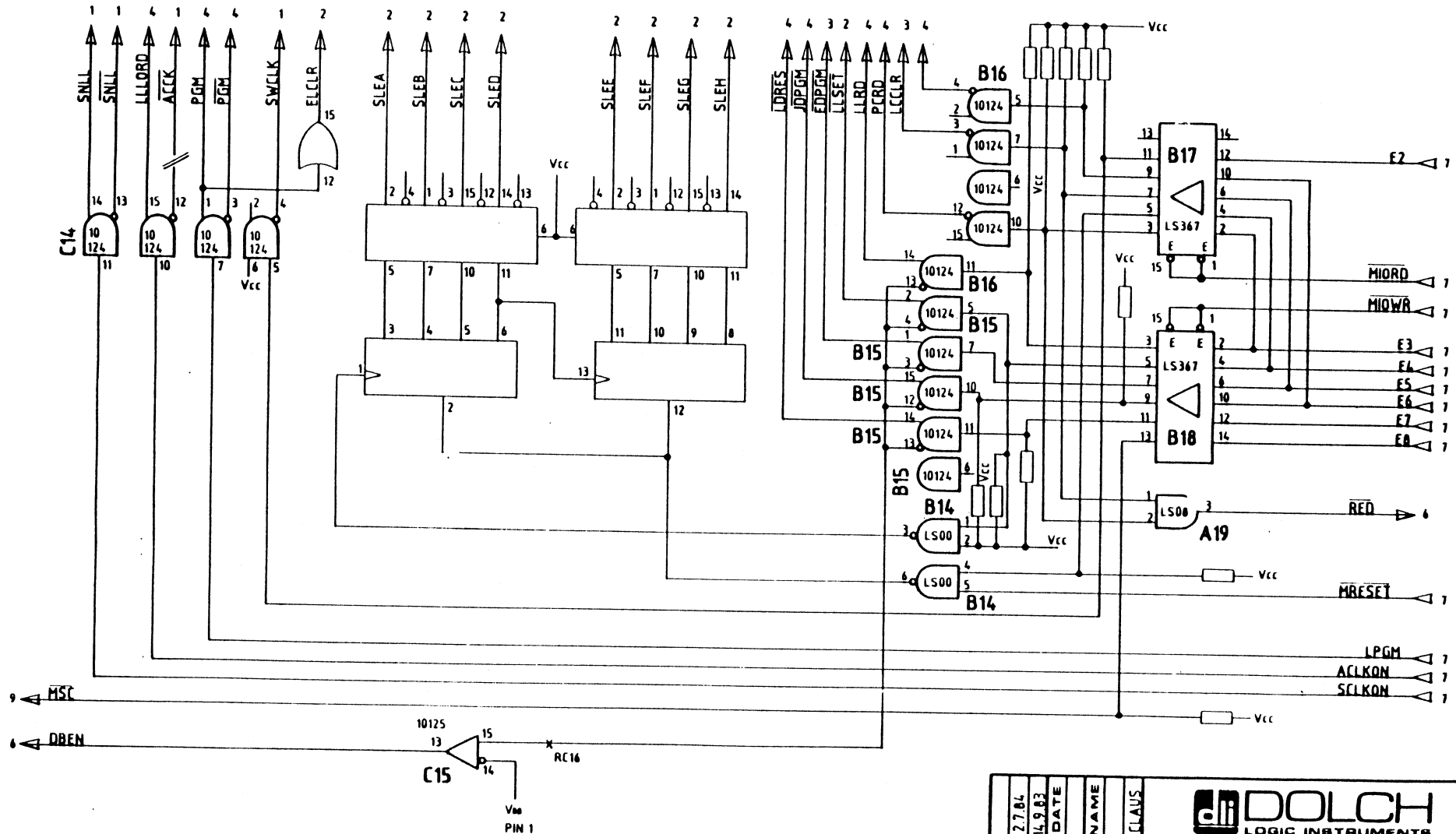

G	562	2.7.84	
E	384	14.9.83	
CODE	ERN	DATE	REVISIONS
			DATE / NAME
CHECK			
DRAWN	16.6.84	CLAUS	

DOLCH LOGIC INSTRUMENTS

LINK BOARD

Serie 1

Link Control Interface

PART NUMBER: 5 2000-09

SHEET: 8/9

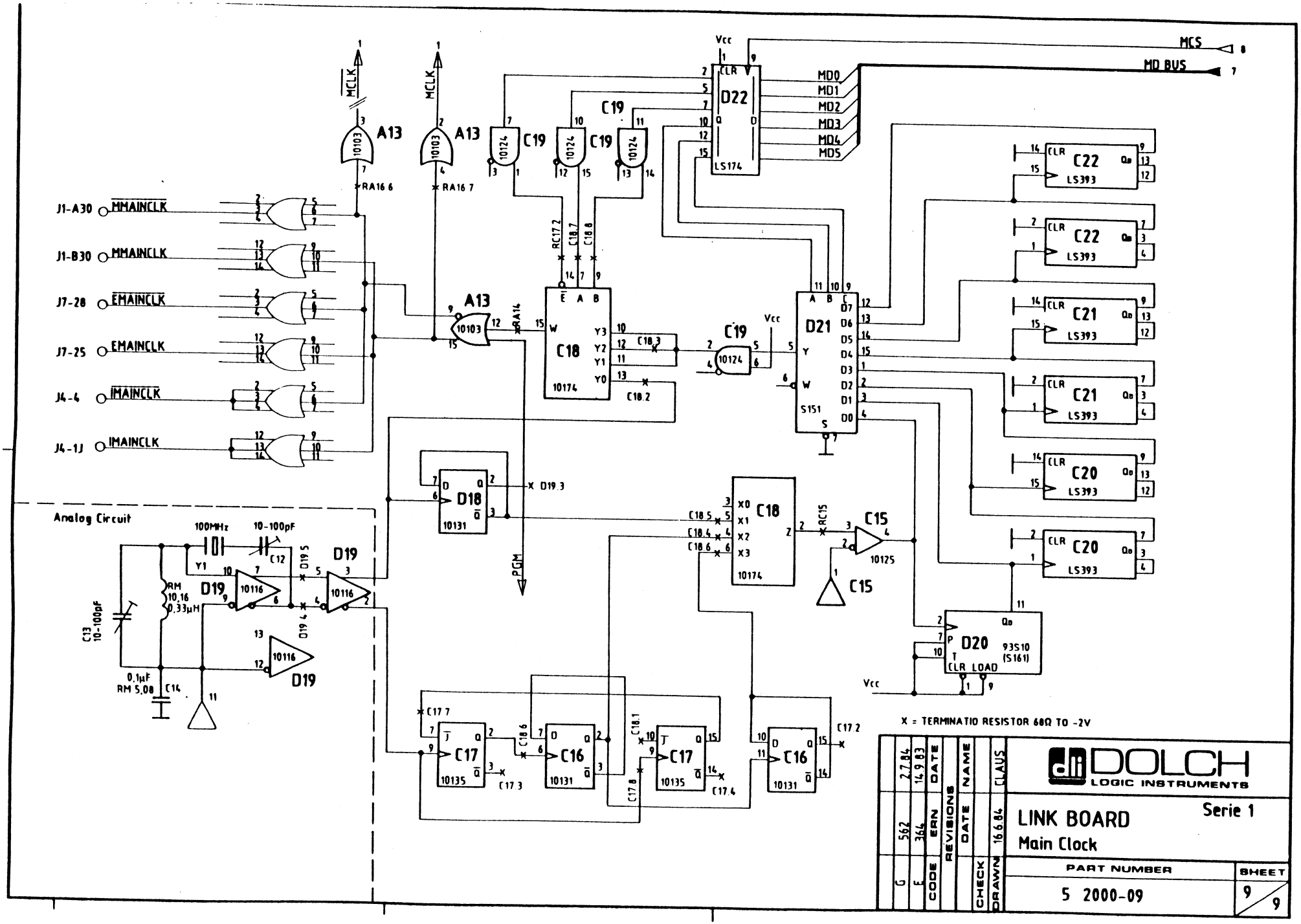
MCS
MD BUS
MD0
MD1
MD2
MD3
MD4
MD5
D22
LS174
Vcc
MCLK
A13
10103
RA16 6
RA16 7
C19
10124
RC17 2
C18 7
C18 8
C18
10174
C18 3
C18 2
RA14
J1-A30 MMAINCLK
J1-B30 MMAINCLK
J7-28 EMAINCLK
J7-25 EMAINCLK
J4-4 IMAINCLK
J4-1J IMAINCLK
D21
S151
C22
LS393
C21
C20
D18
10131
D19 3
PGM
C15
10125
D20
93S10
(S161)
CLR LOAD
Analog Circuit
100MHz
10-100pF
C12
Y1
D19
10116
D19 5
D19 4
RM
10,16
0,33µH
C13
10-100pF
0,1µF
RM 5,08
C14
C17
10135
C16
10131
C17 7
C18 6
C17 3
C18 1
C17 8
C17 4
C17 2
X = TERMINATIO RESISTOR 68Ω TO -2V
DOLCH
LOGIC INSTRUMENTS
LINK BOARD
Main Clock
Serie 1
PART NUMBER
5 2000-09
SHEET
9/9
CODE
ERN
DATE
REVISIONS
NAME
CHECK
DRAWN
CLAUS
16.6.84
14.9.83
2.7.84
364
562

QTY	DLI PART NO.	DESCRIPTION	DESIGNATION
1		74 LS 02	D10
3		74 LS 08	B4, C5, D3
2		74 LS 14	C3, D1
3		74 LS 32	C4
1		74 LS 74	B3, C8
2		74 LS 86	B9, B12, C13
1		74 LS 125	D9
1		74 LS 138	D2
1		74 LS 148	A6
1		74 LS 174	C7
2		74 LS 244	A1, B1
2		74 LS 245	A4, D5
4		74 LS 374	A5, 7, 8, 9
1		75160	B2
1		75161	A2
3		1488	A11, 12, 15
3		1489	A10, 16, B10
1		7611	D4
2		8251	C12, 14
2		4053 B	B8, 11
2		HD 4702	B5, 6
1		MC 6821	C1
1		µPD 1990 C	C6
1		µPD 7210	C2
2		TIL 112	A14, B14*
1		74 S 32	A3
3		Transistor BC 307 B	Q1, Q4, Q5
3		" BC 237 B	Q2, Q3, Q6
1		Zener-Diode ZF 3,0	VR1
8		Diode 1N4148	CR1 – CR8

* z.Zt. nicht bestücken (478)

5/3	20.7.84	DATE	
4/8	10.2.84	NAME	
		DRAWN	8.8.84

DOLCH LOGIC INSTRUMENTS

PART LIST
INTERFACE – BOARD

PART NUMBER: S 2000 – 10

SHEET: 1/4

QTY	DLI PART NO.	DESCRIPTION	DESIGNATION
1		Quarz 2,4576 MHz	Y1
1		Quarz 32,768 MHz	Y2
1		Akku Saft-Memoguard	Type 304-3,6V
1		KeramikKondensator 30pF	C15
2		" 56pF	C16,17
10		" 100pF	C1-4,7-10,18,19
24		" 22nF	C5,6,CA
1		" 4,7nF	C20
10		Tantalkondensator 10µF/10V	C11,12,CB
1		" 22µF/10V	C14
1		TrimmKondensator 5-30pF	C13
2		SIL 8x4k7 9pin	R1,R10
3		" 8x3K3 9pin	R24,R34,R35
1		" 8x330 9pin	R28
2		" 8x6K2 9pin	R33,R36
2		" 4x4k7 5pin	R31,R32
2		Widerstand 47	R3,R18
2		" 100	R2,R17
1		" 390	R12
1		" 270	R9
2		" 330	R27,R30
2		" 680	R5,R20
2		" 1k	R14,R15
2		" 3K3	R22,R23
3		" 4k7	R8,R11,R33
1		" 22k	R13
2		" 33k	R25,R26
1		" 100k	R7
4		" 3M3	R4,R6,R19,R21
1		" 10M	R16

F		CODE	SRN	REVISIONS	DATE	NAME
E			523		20.7.84	
			461		10.2.84	
		CHECK	DATE			
			1.8.84			

DOLCH LOGIC INSTRUMENTS

PART LIST
INTERFACE - BOARD

PART NUMBER: 5 2000 - 10

SHEET: 2/4

QTY	DLI PART NO.	DESCRIPTION	DESIGNATION
2		IC-Sockel 40 pol.	
2		" 28 "	
2		" 24 "	
10		" 20 "	
8		" 16 "	
26		" 14 "	
4		" 6 "	
2		VG-Leiste 64pol. abgew.	J1, J2
1		Stiftleiste 34pol. "	J8
3		" 26 pol. "	J3, J4, J7
1		" 16 pol. "	J6
1		" 10 pol. "	J5
2		Auswerfer APC 0007	
2		Senkschraube Kreuzschlitz	M2,5 x 6 DIN 965
1	5 2000 - 10 Rev. D	Leiterplatte	

					DOLCH LOGIC INSTRUMENTS
5 2 3	20.7.84	DRN	DATE	NAME	PART LIST
4 6 1	10.2.84				INTERFACE - BOARD
		CODE	REVISIONS	CHECK	PART NUMBER / SHEET
				DRAWN	5 2000 - 10 / 3/4

QTY	DLI PART NO.	DESCRIPTION	DESIGNATION
1	4 2000 - 06 Rev. A	7611	D4

F	S 83	20.7.84		NAME	DIENER
E	468	10.7.84	REVISIONS	DATE	5.7.84
CODE	BRN	DATE		CHECK	DRAWN

DOLCH LOGIC INSTRUMENTS

PART LIST
INTERFACE-BOARD
PROGRAMMABLE IC's

PART NUMBER: 5 2000 - 10

SHEET: 4/4

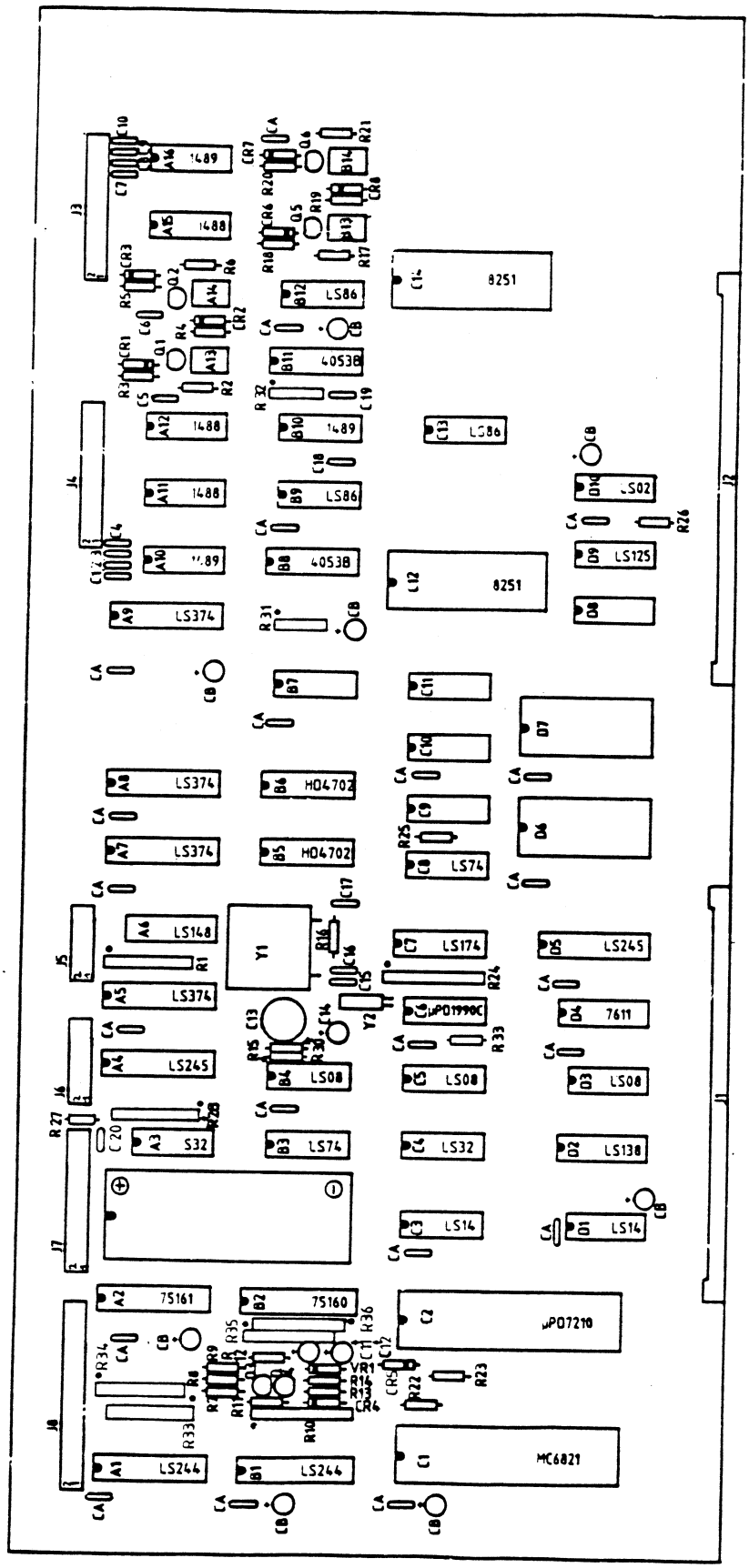

LS: 1x 4n7
2x SIL 3K3
2x SIL 6K2

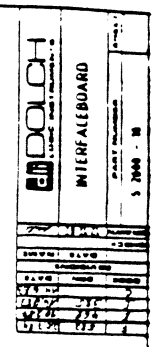

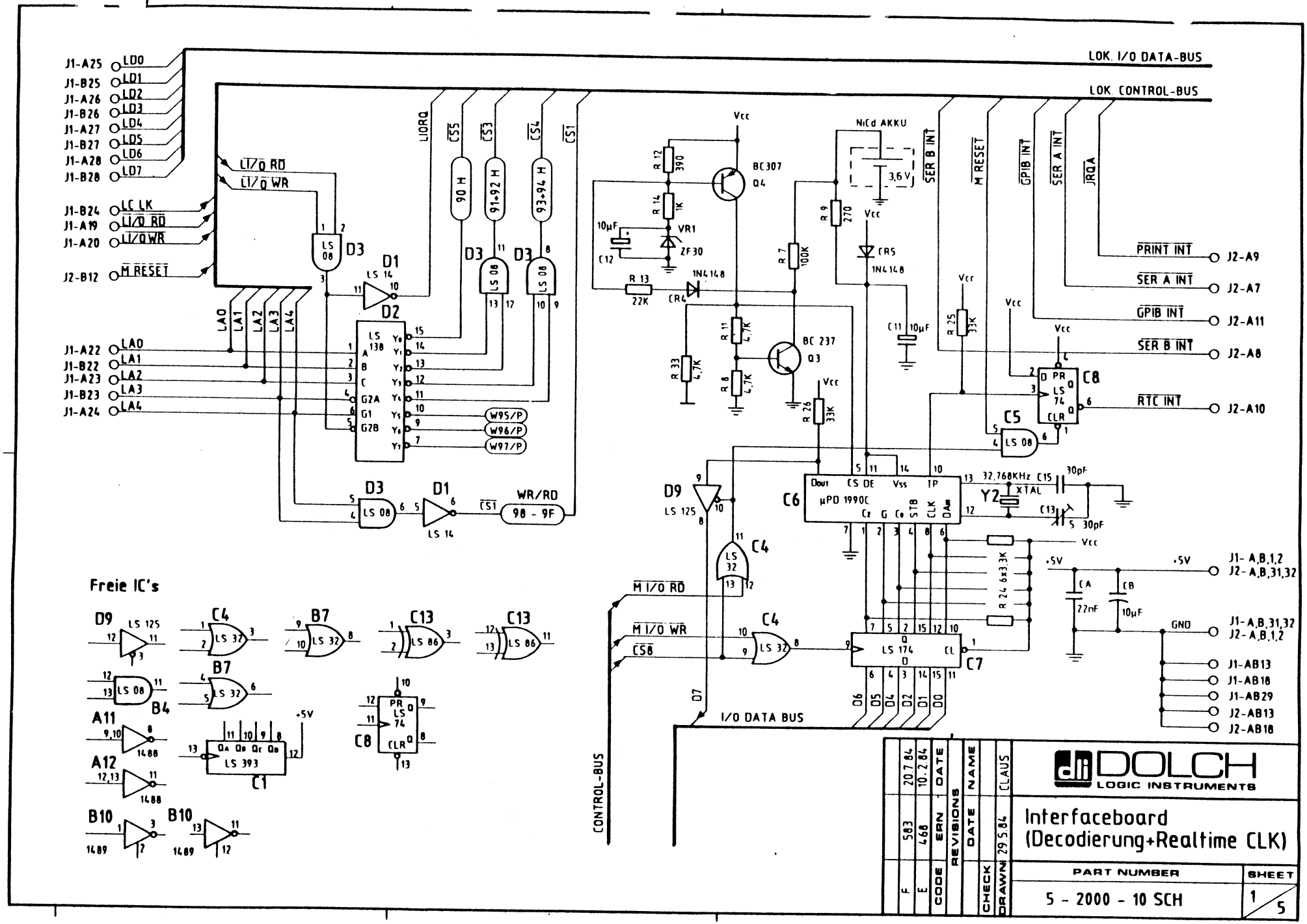
LOK. I/O DATA-BUS
LOK. CONTROL-BUS
J1-A25 LD0
J1-B25 LD1
J1-A26 LD2
J1-B26 LD3
J1-A27 LD4
J1-B27 LD5
J1-A28 LD6
J1-B28 LD7
J1-B24 LC LK
J1-A19 LI/O RD
J1-A20 LI/O WR
J2-B12 M RESET
LI/O RD
LI/O WR
LIORQ
CS5
CS3
CS4
CS1
90 H
91+92 H
93+94 H
LA0
LA1
LA2
LA3
LA4
J1-A22 LA0
J1-B22 LA1
J1-A23 LA2
J1-B23 LA3
J1-A24 LA4
D3 LS 08
D1 LS 14
D2 LS 138
W95/P
W96/P
W97/P
WR/RD
98 - 9F
Vcc
R 12 390
R 14 1K
10µF
C12
VR1
ZF30
R 13 22K
1N4148
CR4
BC307 Q4
R 7 100K
R 11 4,7K
R 8 4,7K
R 33 4,7K
BC 237 Q3
R 26 33K
NiCd AKKU
3,6 V
R 9 270
CR5
1N4148
C11 10µF
R 25 33K
SER B INT
M RESET
GPIB INT
SER A INT
JRQA
PRINT INT
SER A INT
GPIB INT
SER B INT
RTC INT
J2-A9
J2-A7
J2-A11
J2-A8
J2-A10
C8 LS 74
C5 LS 08
D9 LS 125
C4 LS 32
C6 µPD 1990C
Dout CS OE Vss TP
Cz G Co STB CLK DAm
32,768KHz C15 30pF
Y2 XTAL
C13 5 30pF
R 24 6x3,3K
C7 LS 174
CA 22nF
CB 10µF
+5V
GND
J1- A,B,1,2
J2- A,B,31,32
J1- A,B,31,32
J2- A,B,1,2
J1-AB13
J1-AB18
J1-AB29
J2-AB13
J2-AB18
M I/O RD
M I/O WR
CS8
D7
D6 D5 D4 D2 D1 D0
I/O DATA BUS
CONTROL-BUS
Freie IC's
D9 LS 125
C4 LS 32
B7 LS 32
C13 LS 86
C13 LS 86
B4 LS 08
A11 1488
A12 1488
C1 LS 393
C8 LS 74
B10 1489
B10 1489
DOLCH
LOGIC INSTRUMENTS
Interfaceboard
(Decodierung+Realtime CLK)
PART NUMBER
5 - 2000 - 10 SCH
SHEET
1 / 5
CODE
F 583 20.7.84
E 468 10.2.84
ERN DATE
REVISIONS
DATE NAME
CHECK
DRAWN 29.5.84 CLAUS

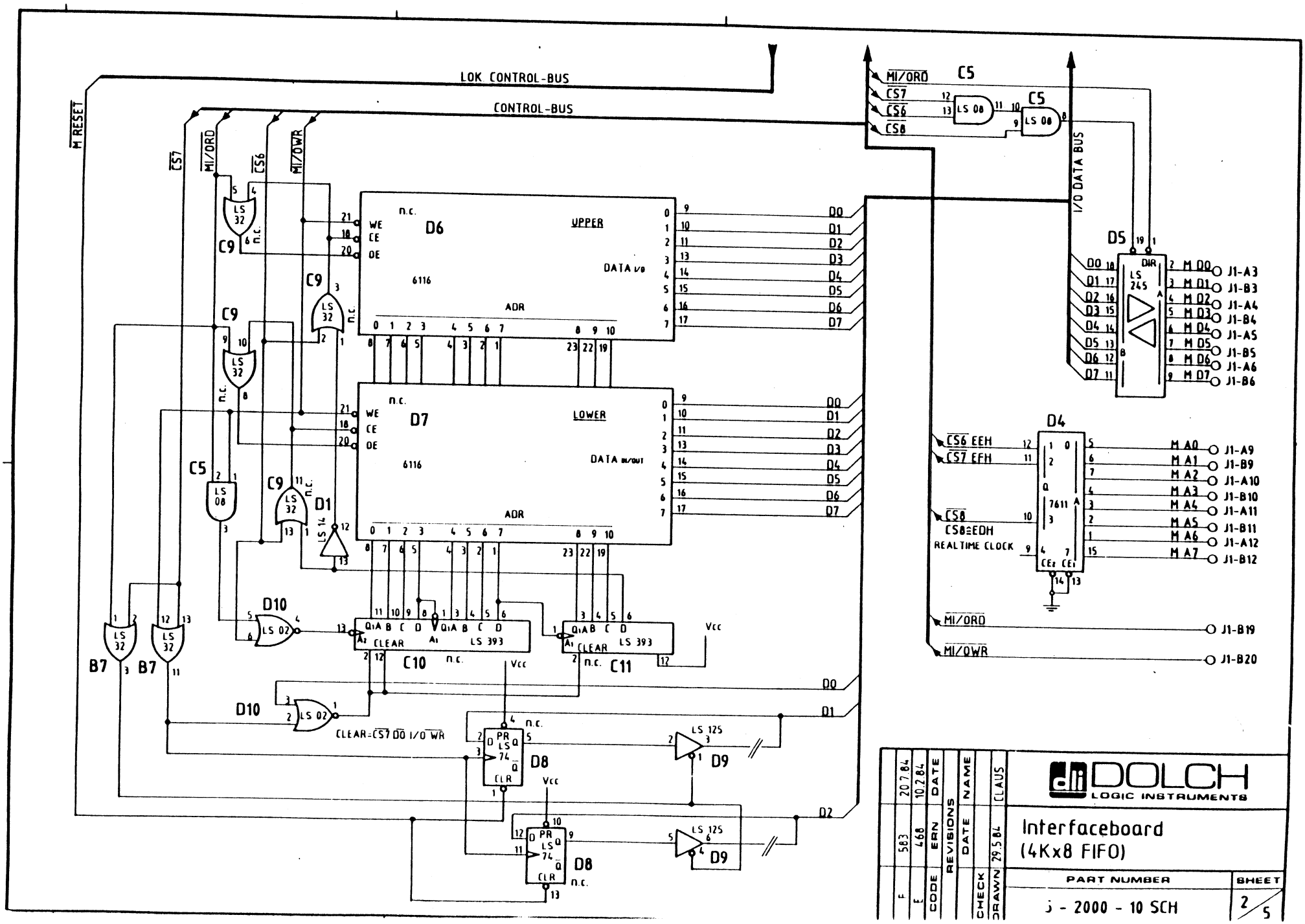
LOK CONTROL-BUS
CONTROL-BUS
M RESET
CS7
MI/ORD
CS6
MI/OWR
CS8
I/O DATA BUS
D6
UPPER
6116
WE
CE
OE
DATA I/O
ADR
D7
LOWER
DATA IN/OUT
D0
D1
D2
D3
D4
D5
D6
D7
D5
LS 245
DIR
M D0
M D1
M D2
M D3
M D4
M D5
M D6
M D7
J1-A3
J1-B3
J1-A4
J1-B4
J1-A5
J1-B5
J1-A6
J1-B6
D4
7611
CS6 EEH
CS7 EFH
CS8
CS8≡EDH
REALTIME CLOCK
M A0
M A1
M A2
M A3
M A4
M A5
M A6
M A7
J1-A9
J1-B9
J1-A10
J1-B10
J1-A11
J1-B11
J1-A12
J1-B12
J1-B19
J1-B20
C10
C11
LS 393
CLEAR
D1
LS 14
D10
LS 02
CLEAR=CS7 DO I/O WR
D8
D9
LS 125
B7
Vcc
n.c.
DOLCH
LOGIC INSTRUMENTS
Interfaceboard
(4Kx8 FIFO)
PART NUMBER
3 - 2000 - 10 SCH
SHEET
2/5
F 583 20.7.84
E 468 10.2.84
CODE ERN DATE
REVISIONS
DATE NAME
CHECK
DRAWN 29.5.84 CLAUS

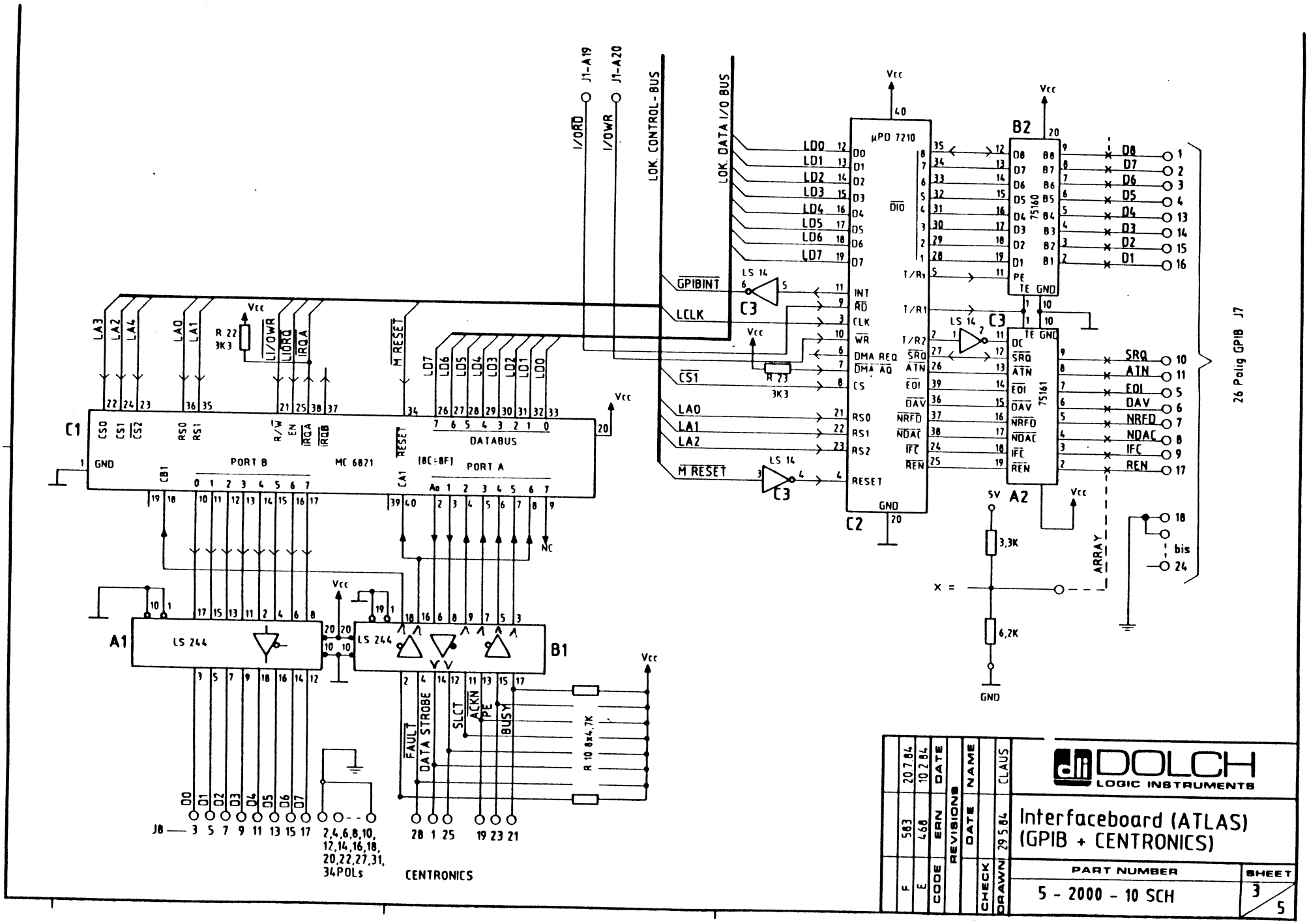
J1-A19
J1-A20
I/ORD
I/OWR
LOK. CONTROL-BUS
LOK. DATA I/O BUS
µPD 7210
C2
B2
75160
A2
75161
C3
LS 14
C1
MC 6821
PORT B
PORT A
DATABUS
A1
LS 244
B1
R 22 3K3
R 23 3K3
R 10 8x4,7K
3,3K
6,2K
5V
GND
Vcc
ARRAY
26 Polig GPIB J7
J8
2,4,6,8,10, 12,14,16,18, 20,22,27,31, 34POLs
CENTRONICS
FAULT
DATA STROBE
SLCT
ACKN
PE
BUSY
DOLCH
LOGIC INSTRUMENTS
Interfaceboard (ATLAS)
(GPIB + CENTRONICS)
PART NUMBER
5 - 2000 - 10 SCH
SHEET
3
5
REVISIONS
DATE
NAME
CLAUS
29.5.84
CHECK
DRAWN
F
583
20.7.84
E
468
10.2.84
CODE
ERN
DATE

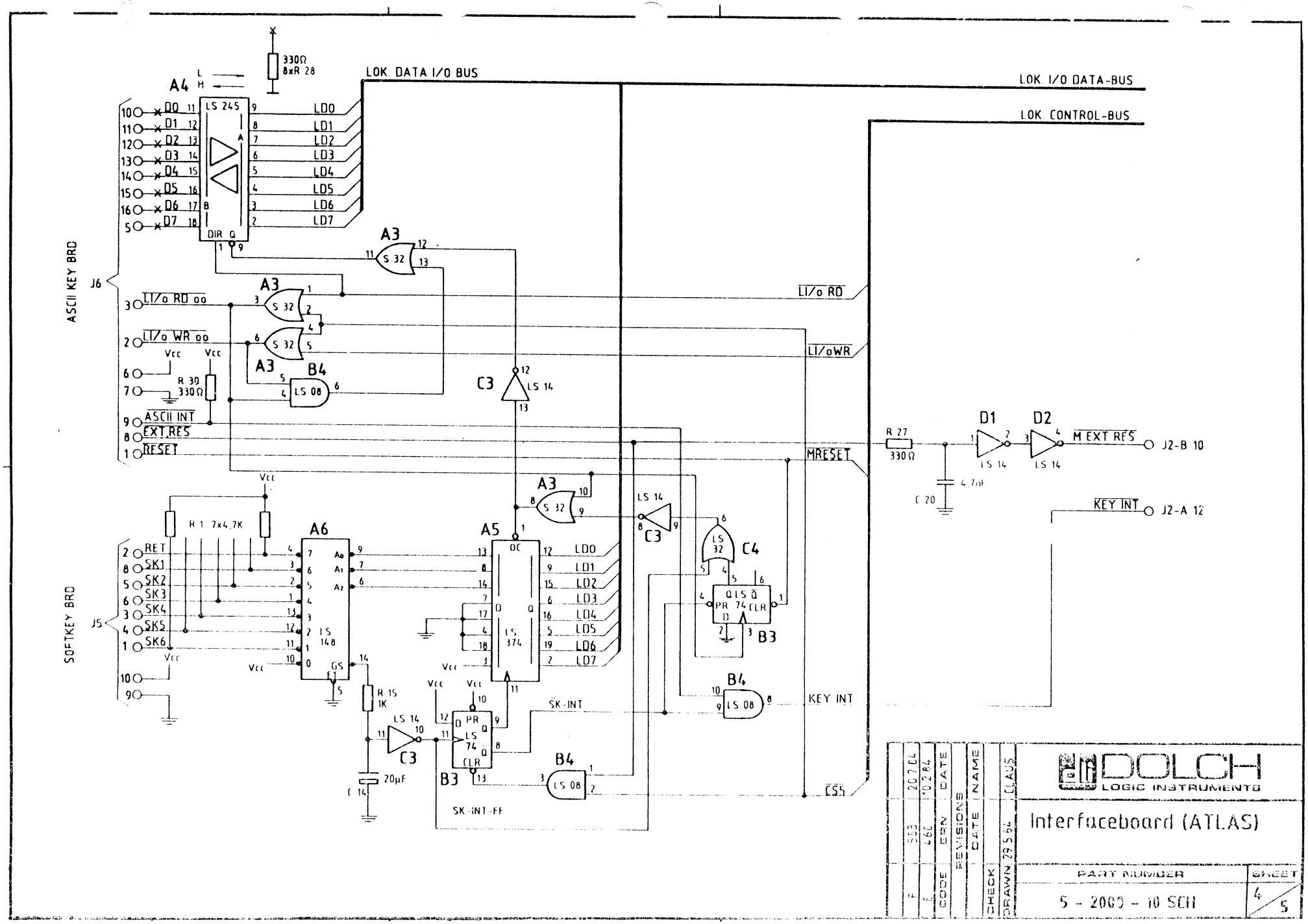
LOK. DATA I/O BUS
LOK. I/O DATA-BUS
LOK. CONTROL-BUS
330Ω
8xR 28
A4
LS 245
DIR
LDO
LD1
LD2
LD3
LD4
LD5
LD6
LD7
ASCII KEY BRD
J6
LI/o RD oo
LI/o WR oo
ASCII INT
EXT.RES
RESET
A3
S 32
B4
LS 08
R 30
330Ω
Vcc
C3
LS 14
LI/o RD
LI/oWR
MRESET
R 27
330Ω
C 20
4.7nF
D1
D2
M EXT RES
J2-B 10
KEY INT
J2-A 12
SOFTKEY BRD
J5
RET
SK1
SK2
SK3
SK4
SK5
SK6
R 1 7x4.7K
A6
LS 148
GS
A5
LS 374
OC
R 15
1K
C 14
20µF
SK-INT
SK-INT-FF
LS 74
PR
CLR
C4
LS 32
B3
CS5
DOLCH
LOGIC INSTRUMENTS
Interfaceboard (ATLAS)
PART NUMBER
5 - 2000 - 10 SCH
SHEET
4
5
CODE
ERN
DATE
REVISIONS
NAME
CHECK
DRAWN 29.5.84
CLAUS
20.7.84
10.2.84

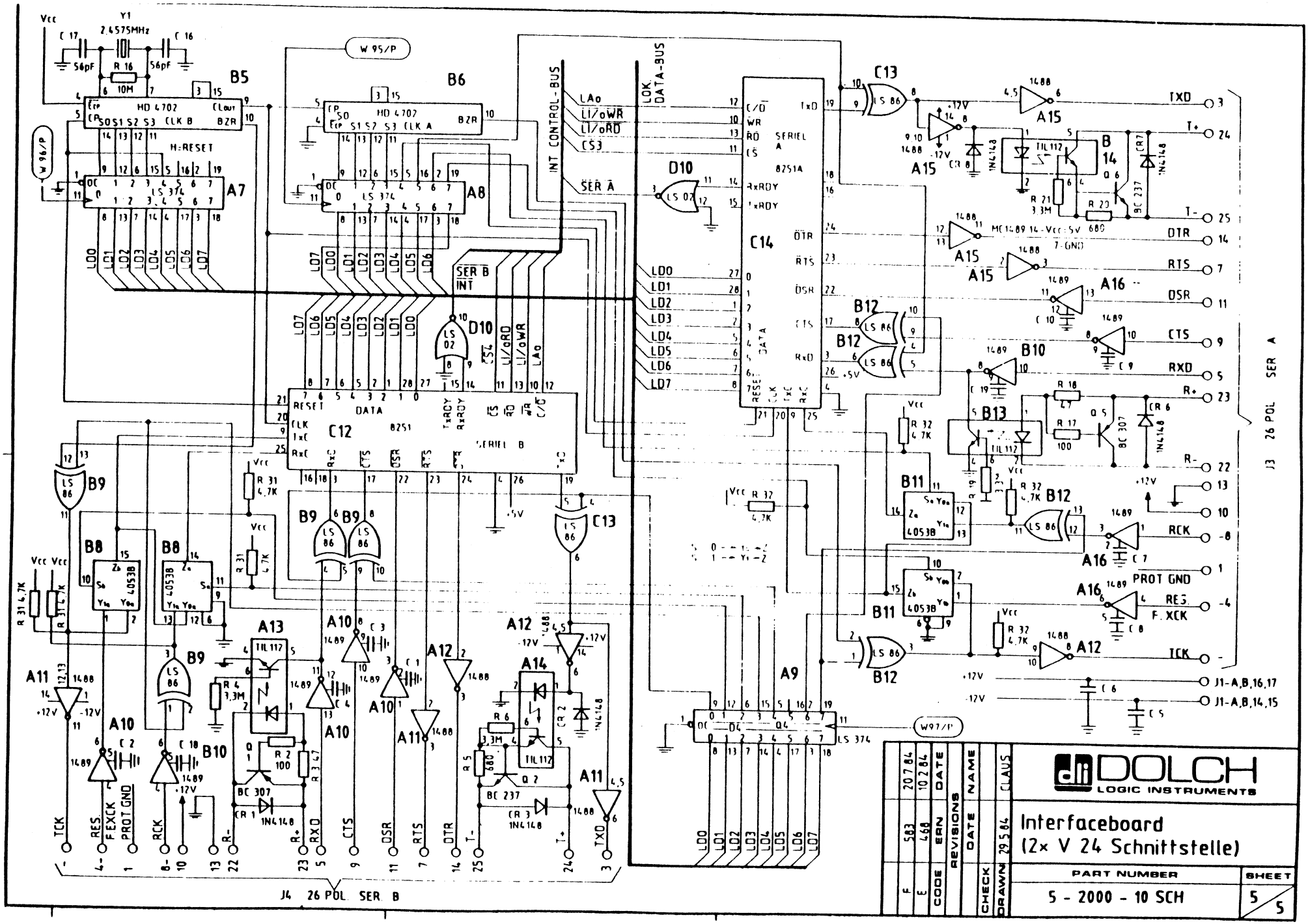
Interfaceboard
(2x V 24 Schnittstelle)
DOLCH
LOGIC INSTRUMENTS
PART NUMBER
5 - 2000 - 10 SCH
SHEET
5 / 5
REVISIONS
CODE
ERN
DATE
NAME
CHECK
DRAWN
CLAUS
29.5.84
J3 26 POL SER A
J4 26 POL SER B
INT CONTROL-BUS
LOK DATA-BUS
B5
B6
A7
A8
C12
C14
A9
B14
Y1
2,4575MHz
W 95/P
W 96/P
W 97/P
TXD
T+
T-
DTR
RTS
DSR
CTS
RXD
R+
R-
RCK
PROT GND
REG.
F.XCK
TCK
J1-A,B,16,17
J1-A,B,14,15

QTY	DLI PART NO.	DESCRIPTION	DESIGNATION
2		Pfostenleisten 26p. gew.	
1	5 2000-11	PC-BOARD Rev. ϕ	

		DATE	
		NAME	
	EAN	DATE	19.11.83
	REVISIONS		
	CODE	CHECK	
		DRAWN	

DOLCH LOGIC INSTRUMENTS

PART LIST

LEC-BOARD

PART NUMBER: 5 2000-11

SHEET: 1/1

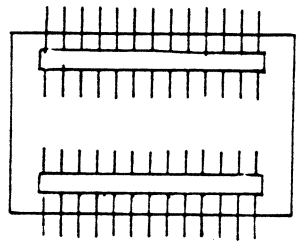

							DOLCH LOGIC INSTRUMENTS
							LEC -BOARD
							PART NUMBER / SHEET
							5 2000 -11

CODE	ERN	DATE	REVISIONS	DATE	NAME
				CHECK	
				DRAWN	19.12.83

QTY	DLI PART NO.	DESCRIPTION	DESIGNATION
1	5 2000 - 12	PC-BOARD	
1		LED rechteckig (5mm) grün	CR1
1		150 Ω	R1
1		Poti 100 kΩ	* R2
1		" 220 kΩ	
1		Aufsteckhülse 6x12 sw	**

* A1 → 100kΩ KNOTT

* A2 → 220kΩ UNIPO

R2: Spörle 0680-600

** : AH 13.017.02

		DATE	NAME	
		ERN	REVISIONS	DATE	
	Ø	CODE		CHECK	
				DRAWN	16.1.84

DOLCH LOGIC INSTRUMENTS

PART LIST

LED-BOARD

PART NUMBER: 5 2000 - 12 A1/A2

SHEET

Aufsteckhülse

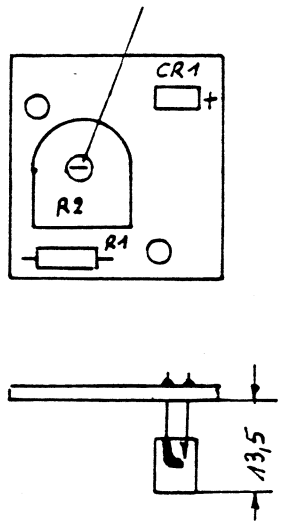

							DOLCH LOGIC INSTRUMENTS
		12.2.84	DATE		NAME		
			ERN	REVISIONS	DATE		LED BOARD
		ø	CODE		CHECK	DRAWN	PART NUMBER: 5-2000-12 — SHEET 1/1

QTY	DLI PART NO.	DESCRIPTION	DESIGNATION
1	Video Brd 52000-13	Platine	
2		MPS 2369	Q1, Q2
2		1N4148	D1, D2
1		1kΩ	R1
1		2,2kΩ	R2
1		2,2kΩ Trimmer	R3
1		470Ω	R4
1		100Ω	R5
1		15Ω	R6
1		100pF	C1
1		68nF	C2
1		10µF / 10V Tantal	C3
1		14 Pol. Stiftleiste gew.	J1
1	72000-15	VIDEO CABLE :	
2		14p. Pfostenverbinder	
280mm		Flachbandkabel 14p.	
300mm		Koax Kabel	

	12.4.84	DATE	NAME
	ERN	REVISIONS	DATE
	CODE	CHECK	DRAWN 12.3.84 Schaumb

DOLCH LOGIC INSTRUMENTS

PART LIST

Video Board

PART NUMBER: 52000-13 A

SHEET: 1/1

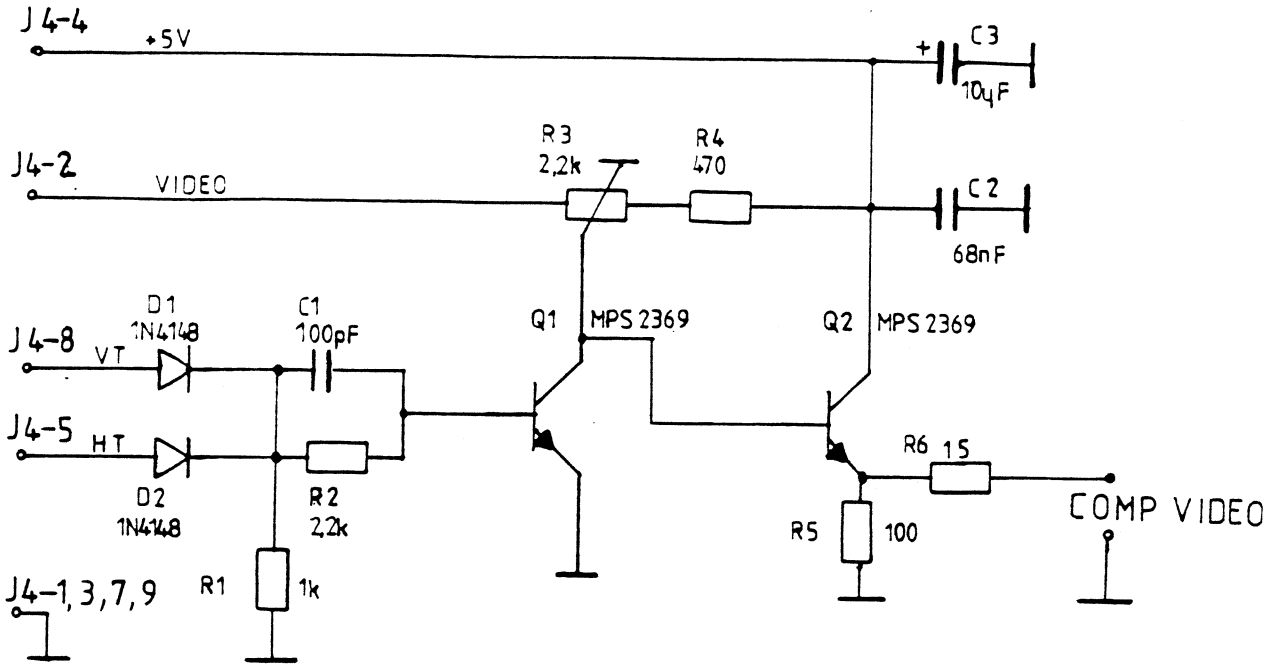

		17.4.84	DATE	NAME	Schaumb.	DOLCH LOGIC INSTRUMENTS	
			ERN	DATE	12.3.84	VIDEO BOARD	
			CODE	CHECK	DRAWN	PART NUMBER	SHEET
				REVISIONS		52000 - 13	

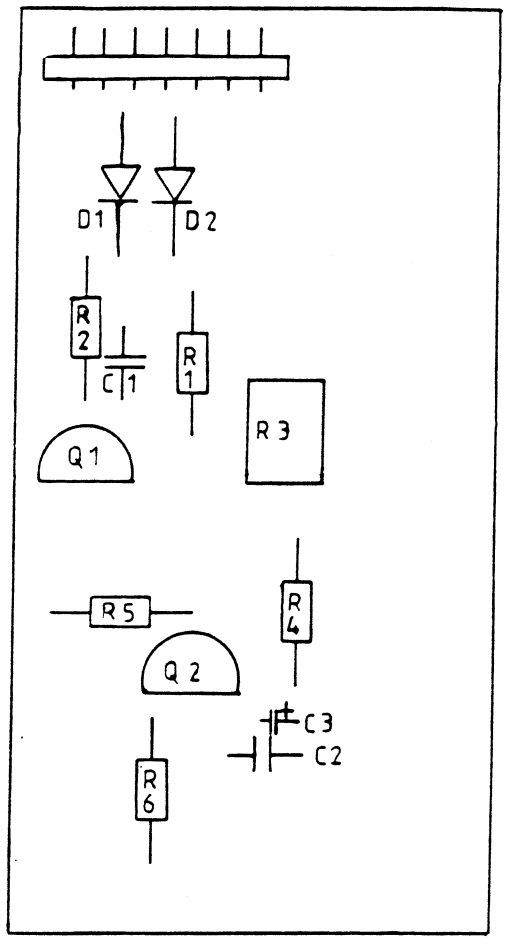

		17.4.84	DATE		NAME		DOLCH LOGIC INSTRUMENTS
			ERN	REVISIONS	DATE	12.3.84	VIDEO BOARD
			CODE		CHECK	DRAWN	PART NUMBER 52000-13 / SHEET

Pos.	Qty.	Description	DLI Part No	Designation
1	1	Interconnection Board Rev. C	5 2001-02	
2	1	96p. VG Leiste Stecker	STV-R 96 Mabc 0407 334411	Erni
3	4	26p. Stiftleiste abgewinkelt		J3, J4, J5, J6
4	1	16p. Stiftleiste gerade		JMP (SIC)

DOLCH LOGIC INSTRUMENTS

Part List
Interconnection Board Atlas

PART NUMBER 5 2001-02 A1

1/1

VG-Leiste auf Abstand setzen!

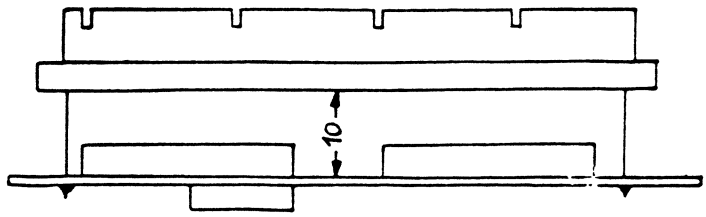

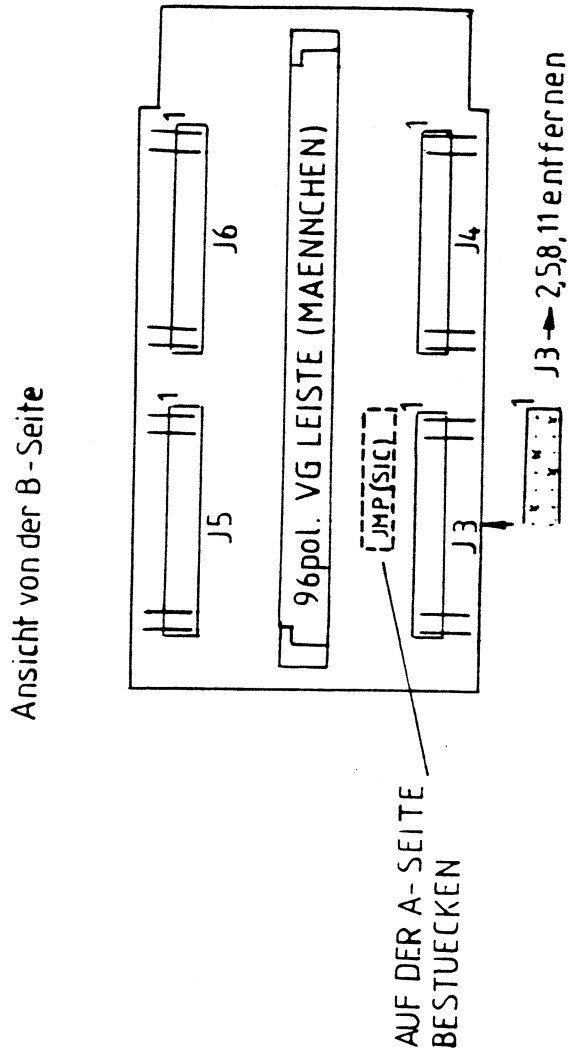

					DOLCH LOGIC INSTRUMENTS
		18 3 83	DATE	NAME	INTERCONNECTION BRD (ATLAS)
		ERN	REVISIONS	DATE	
	C	CODE		CHECK	PART NUMBER: 5 2001-02 A1
				DRAWN 4.12.82	SHEET 1/1

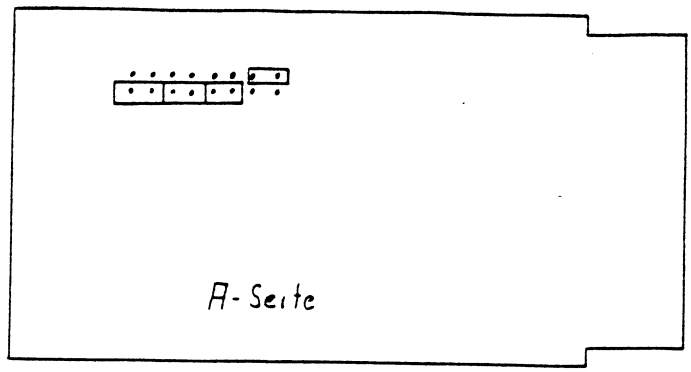

Slot 1

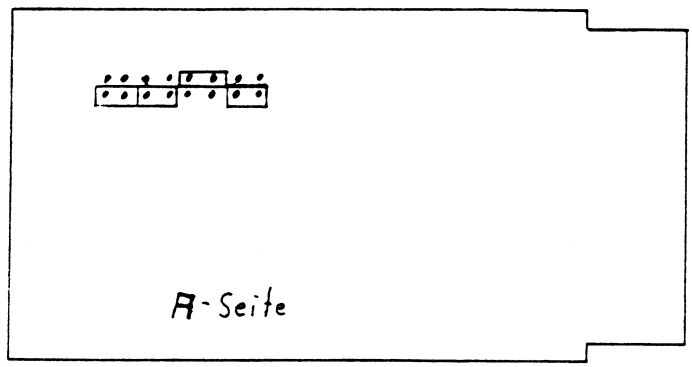

Slot 2

		18 3 83	DATE		NAME	
		ERN	REVISIONS		DATE	05.10.83
		CODE			CHECK	DRAWN

DOLCH LOGIC INSTRUMENTS

Interconnection Board Atlas
Jumper Bestückung

PART NUMBER	SHEET
5 2001-02 A1	1/1

Pos.	Qty.	Description	DLI Part No.	Designation
1	14	Taste grau	6450.0001	Fa.Marquadt
2	1	Taste dunkelgrau	6450.0003	"
3	2	Taste anthrazit	"1"	"
4	2	" "	"2"	"
5	2	" "	"3"	"
6	2	" "	"4"	"
7	2	" "	"5"	"
8	2	" "	"6"	"
9	1	" "	"7"	"
10	1	" "	"8"	"
11	1	" "	"9"	"
12	1	" "	"0"	"
13	1	" "	"A"	"
14	!	" "	"B"	"
15	1	" "	"C"	"
16	1	" "	"D"	"
17	1	" "	"E"	"
18	1	" "	"F"	"
19	1	" "	"G"	"
20	1	" "	"H"	"
21	1	" "	"I"	"
22	1	Taste dunkelgrau	"SPACE"	"
23	1	" "	"CTRL"	"
24	1	" "	"RUN"	"
25	1	" "	"STOP"	"
26	1	" "	"RESET"	"
27	1	Taste grau	"SHIFT"	"
28	1	Taste dunkelgrau	"ENTER"	"

14.8.84	DATE	NAME	
9.2.84			
467	ERN	REVISIONS	DATE
B	CODE	CHECK	DRAWN

DOLCH LOGIC INSTRUMENTS

Part List

Key Board Colt

PART NUMBER: 5-2100-01

SHEET: 1/2

Pos.	Qty.	Description	DLI Part No.	Designation
29	1	LED rechteckig	rot 5mm	CR1
30	1	Board	5-2100-01	
31	1	Stiftleiste (ger.) 26p.		J1

8	467	14.8.84		
CODE	ERN	DATE	NAME	
		REVISIONS	DATE	
			CHECK	
			DRAWN	

DOLCH LOGIC INSTRUMENTS

Part List

Key Board Colt

PART NUMBER

SHEET 2/2

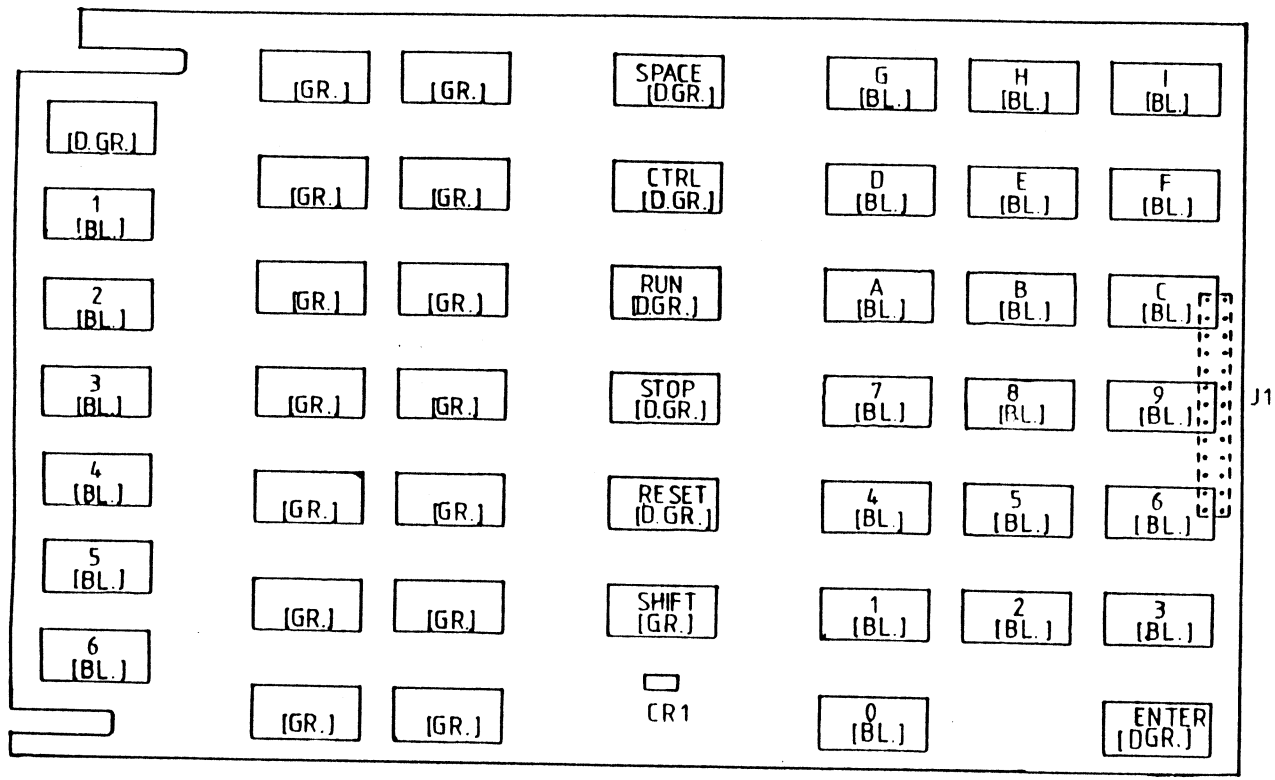

DOLCH LOGIC INSTRUMENTS

COLT KEY-BOARD

PART NUMBER S 2100 - 01

SHEET 1/1

DRAWN	20.12.83 DEBERT	
CHECK		
	DATE	NAME

REVISIONS

CODE	ERN	DATE
A		
B	447	

Pos.	Qty.	Description	DLI Part No.	Designation
1	1	74S08		A4
2	1	74LS02		A2
3	1	74LS14		B3
4	2	74LS74		A3, B5
5	1	74 S138		C1
6	1	74LS148		B1
7	2	74LS174		C5, B2
8	1	74LS244		C4
9	1	74LS293		C2
10	1	74LS390		B4
11	1	MC14490		A1
12	1	2764-3		C3
13	1	BC237		T1
14	1	120 Ω		R4
15	1	180 Ω		R11
16	2	330 Ω		R7,8
17	1	680 Ω		R9
18	4	1k Ω		R1,2,3,6
19	1	1k5 Ω		R10
20	1	5k6 Ω		R5
21	2	470 Ω		R12,13
22	1	4x470 Ω 5 Pol.		RIII

		DATE	NAME	
	ERN	DATE		
REVISIONS				
CODE			CHECK	
			DRAWN	26.8.87

DOLCH LOGIC INSTRUMENTS

Part List
Key-Logic

PART NUMBER	SHEET
5 2100-02	1/2

Pos.	Qty.	Description	DLI Part No.	Designation
23	1	8 x 14Ω 9 Pol.		RI
24	1	8 x 4k7Ω 9 Pol.		RII
25	1	68 pF		C9
26	1	680 pF		C1
27	1	1,2 nF		C3
28	1	1,5 nF		C8
29	6	22 nF		C2,4,6,10,11,12
30	3	10 µF		C5,7,13
31	6	14 Pol. IC-Sockel		
32	6	16 Pol. IC-Sockel		
33	1	20 pol. IC-Sockel		
34	1	28 pol. IC-Sockel		
35	1	16 pol. Stiftleiste gerade		J3
36	1	10 pol. Stiftleiste gerade		J2
37	1	26 pol. Stiftleiste gerade		J1
38	1	Platine	5 2100 - 02	

REVISIONS			
A	39B	19.10.83	
CODE	BRN	DATE	NAME
		DATE	
	CHECK		
	DRAWN	26.8.83	262

DOLCH LOGIC INSTRUMENTS

Part List
Key - Logic

PART NUMBER	SHEET
5 2100 - 02	2/2

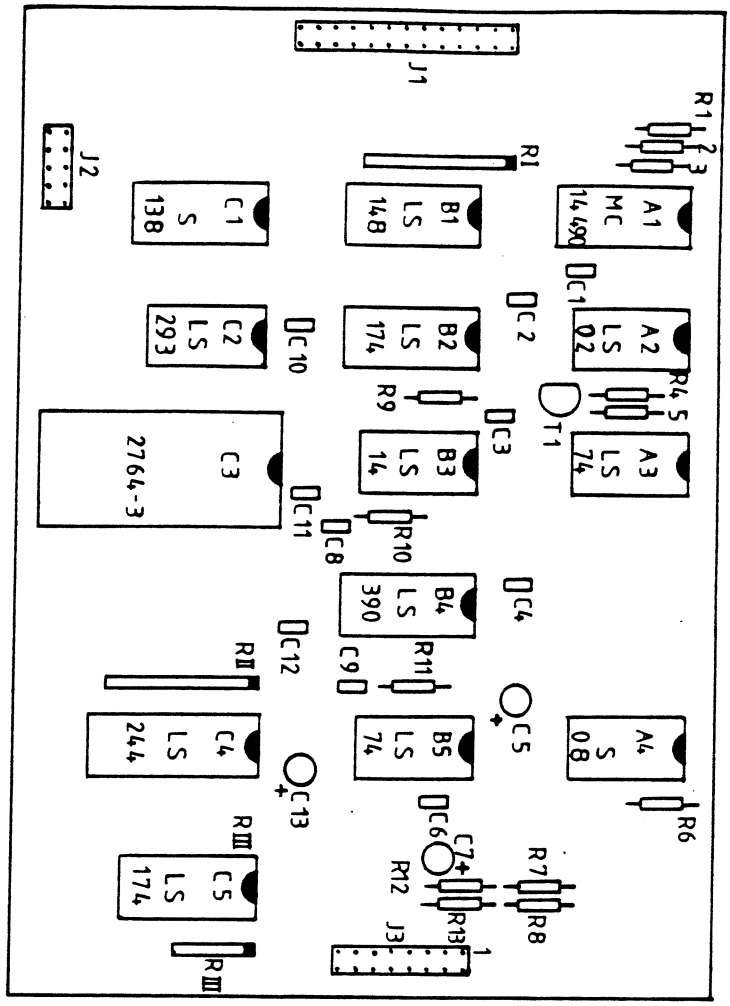

							DOLCH LOGIC INSTRUMENTS
							COLT KEY-LOGIC
							PART NUMBER / SHEET
							5 2100 - 02 / 1/1

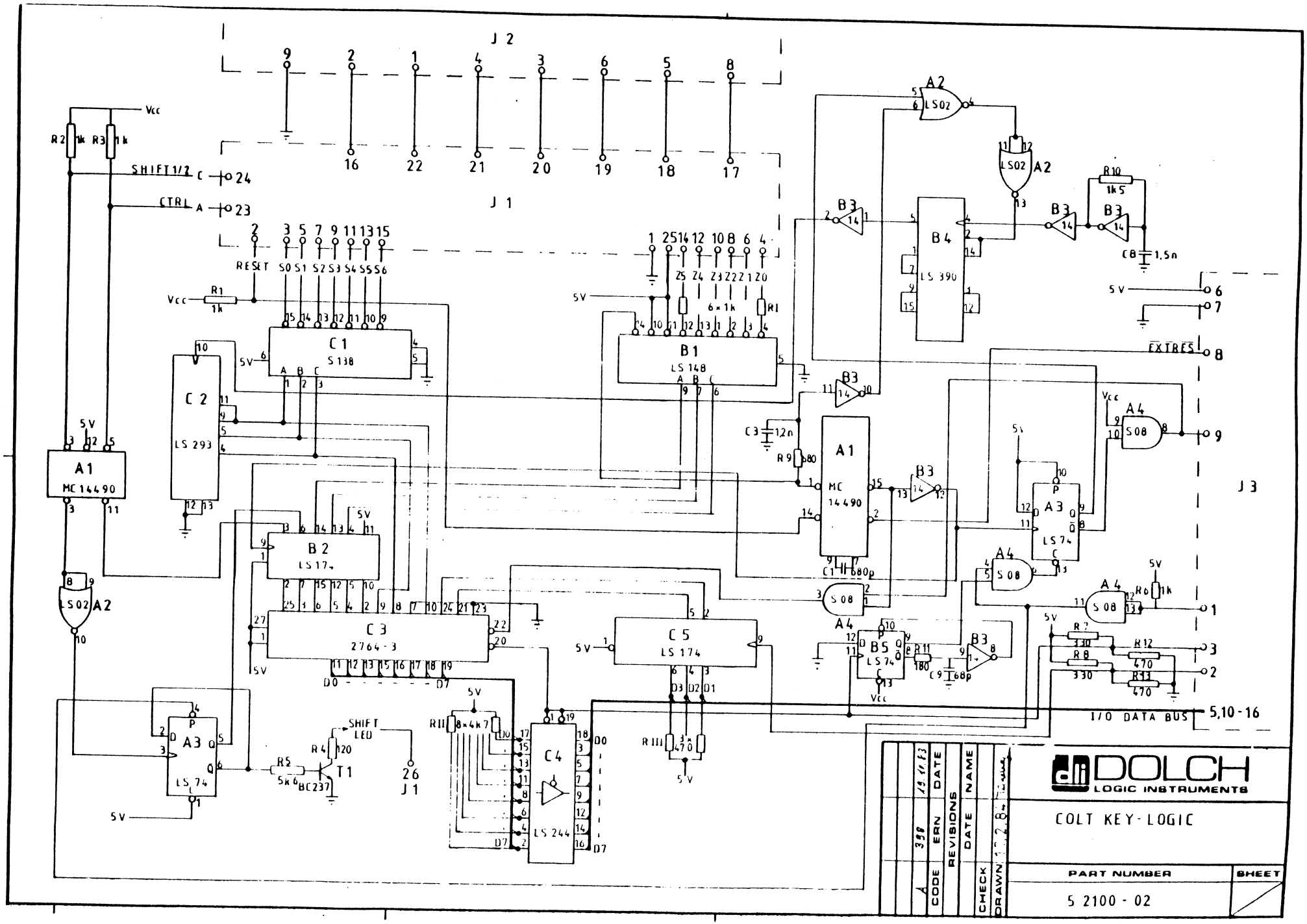
J 2
J 1
J 3
Vcc
R2 1k
R3 1k
SHIFT 1/2 C 24
CTRL A 23
RESET
S0 S1 S2 S3 S4 S5 S6
Z5 Z4 Z3 Z2 Z1 Z0
6 × 1k
R1 1k
C1 S 138
B1 LS 148
C2 LS 293
A1 MC 14490
B2 LS 174
C3 2764-3
C4 LS 244
C5 LS 174
B4 LS 390
A2 LS02
B3 14
R10 1k5
C8 1,5n
EXTRES
A4 S08
A3 LS 74
B5 LS 74
C3 12n
R9 680
C1 680p
R11 180
C9 68p
R6 1k
R7 330
R8 330
R12 470
R13 470
I/O DATA BUS 5,10-16
SHIFT LED
R4 120
R5 5k6
T1 BC237
R11 8×4k7
R111 3×470
D0 - - - - - - D7
D3 D2 D1
5V
DOLCH LOGIC INSTRUMENTS
COLT KEY-LOGIC
PART NUMBER
S 2100 - 02
SHEET
CODE
ERN
DATE
REVISIONS
NAME
CHECK
DRAWN

QTY	DLI PART NO.	DESCRIPTION	DESIGNATION
1	5 2100-04	COLT MOTHERBOARD	
		Rev.: A 2,5 click	
12	J PC 064 F 06	VG - Leiste (Buchse) 64p.	J1, J2
7	350786-1	Vielfachstecker 2 Pol. AMP	J3, J4, J5, J6, J7, J27, J28
19	JPC 001 M01	Flachstecker GST 6,3	J8, J9, J10, ..., J26
1	FTB 0800	Microfuse 800mA Flink	F1
1	AFX 0003	Sicherungsfassung	F1
		TANTAL	
1	CTX 5470DX	47 ... 100µF / 16V	C1
1	CR SB20	Diode SB 520	CR1

A1 ≙ ATLAS

A	5 48	8.6.84	
0		2.3.84	
CODE	ERN	DATE	
REVISIONS			
	DATE	NAME	
CHECK			
DRAWN	2.3.84	D. BERGER	

DOLCH LOGIC INSTRUMENTS

PART LIST
COLT-MOTHERBOARD

PART NUMBER	SHEET
5 2100 - 04 A1	1/1

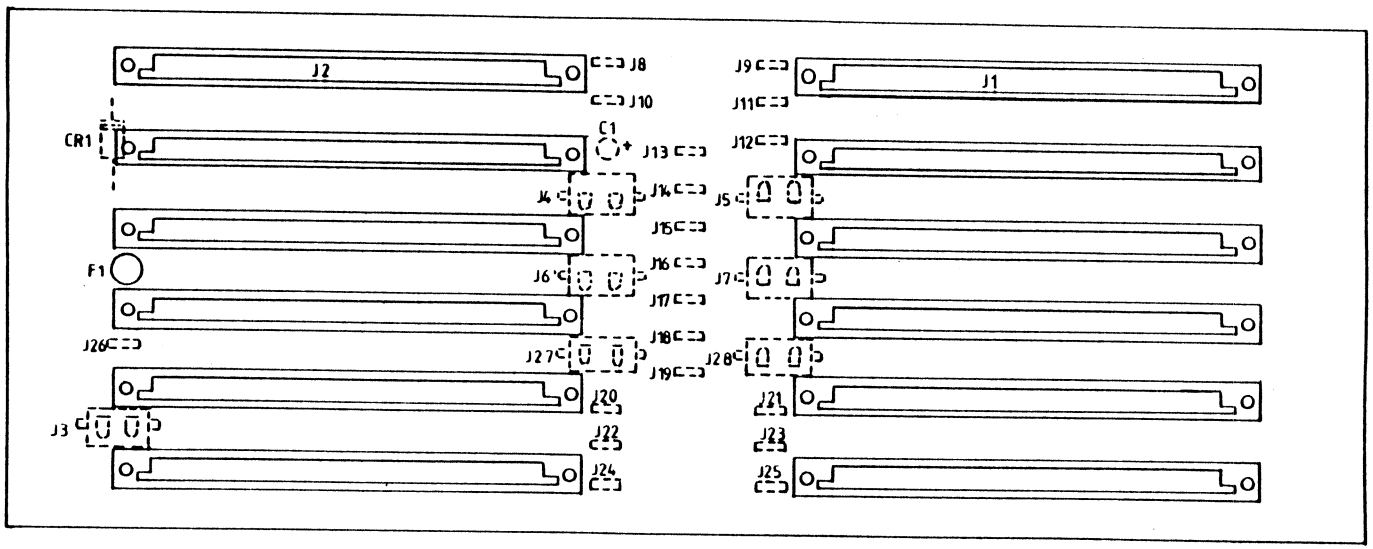

BAUTEILE AUF LOTSEITE BESTUCKEN

CODE	ERN	DATE	NAME
A	548	8.6.1984	
B		2.3.1984	D. BERGER

REVISIONS

CHECK

DRAWN 13.3.1984

DOLCH LOGIC INSTRUMENTS

COLT MOTHERBOARD

PART NUMBER: S 2100 - 04 A1

SHEET: 1 / 1

QTY	DLI PART NO.	DESCRIPTION	DESIGNATION
1	52100-04	COLT MOB Rev. A	
		(2,5mm dick)	
12	JPC 064 F06	VG Federleiste 64p.	J1, J2

A2 ≙ COLT

A	54	7.6.84			
CODE	ERN	DATE	REVISIONS	NAME	
			CHECK	DATE	9.7.84
			DRAWN		

DOLCH LOGIC INSTRUMENTS

PART LIST

COLT MOTHERBOARD

PART NUMBER	SHEET
52100-04 A2	1/1

HARDWARE-DOCUMENTATION

PART-NO: 5 2100-04

REV.:

PRODUCT M03 COLT / ATLAS

DATE: 1.8.1984

Connector Pinout

A	J1	B
5V	1	5V
5V	2	5V
MD0	3	MD1
MD2	4	MD3
MD4	5	MD5
MD6	6	MD7
	7	
	8	
MA0	9	MA1
MA2	10	MA3
MA4	11	MA5
MA6	12	MA7
GND	13	GND
-12V	14	-12V
-12V	15	-12V
+12V	16	+12V
+12V	17	+12V
GND	18	GND
$\overline{\text{MLIORD}}$	19	$\overline{\text{MIORD}}$
$\overline{\text{MLIOWR}}$	20	$\overline{\text{MIOWR}}$
	21	
MLA0	22	MLA1
MLA2	23	MLA3
MLA4	24	MLCCLOCK
MLD0	25	MLD1
MLD2	26	MLD3
MLD4	27	MLD5
MLD6	28	MLD7
GND	29	GND
$\overline{\text{MMAINCLK}}$	30	MMAINCLK
GND	31	GND
GND	32	GND

A	J2	B
GND	1	GND
GND	2	GND
	3	
	4	
	5	
	6	
$\overline{\text{MSERA-INT}}$	7	
$\overline{\text{MSERB-INT}}$	8	
$\overline{\text{MPRINT-INT}}$	9	$\overline{\text{MSRES}}$
$\overline{\text{MRTC-INT}}$	10	$\overline{\text{MEXTRES}}$
$\overline{\text{MGPIB-INT}}$	11	$\overline{\text{M WAIT}}$
$\overline{\text{M KEY-INT}}$	12	$\overline{\text{M RESET}}$
GND	13	GND
-2V	14	-2V
-2V	15	-2V
-5,2V	16	-5,2V
-5,2V	17	-5,2V
GND	18	GND
	19	$\overline{\text{MACTIVE}}$
	20	
	21	
	22	
	23	$\overline{\text{MREQBRQ}}$
MQR	24	MIR
$\overline{\text{MDTREN}}$	25	$\overline{\text{MSYSBRQ}}$
MMBRQ	26	MSYSCLR
MSLOT0	27	MSYSCON 0
MSLOT1	28	MSYSCON 1
MSLOT2	29	MSYSCON 2
MSLOT3	30	MSYSCON 3
+5V	31	+5V
+5V	32	+5V

Signature:

published by: Dolch Logic Instruments, Justus-von-Liebig Straße 19 D. 6057 Dietzenbach, Tel. 0 60 74/4 00 20

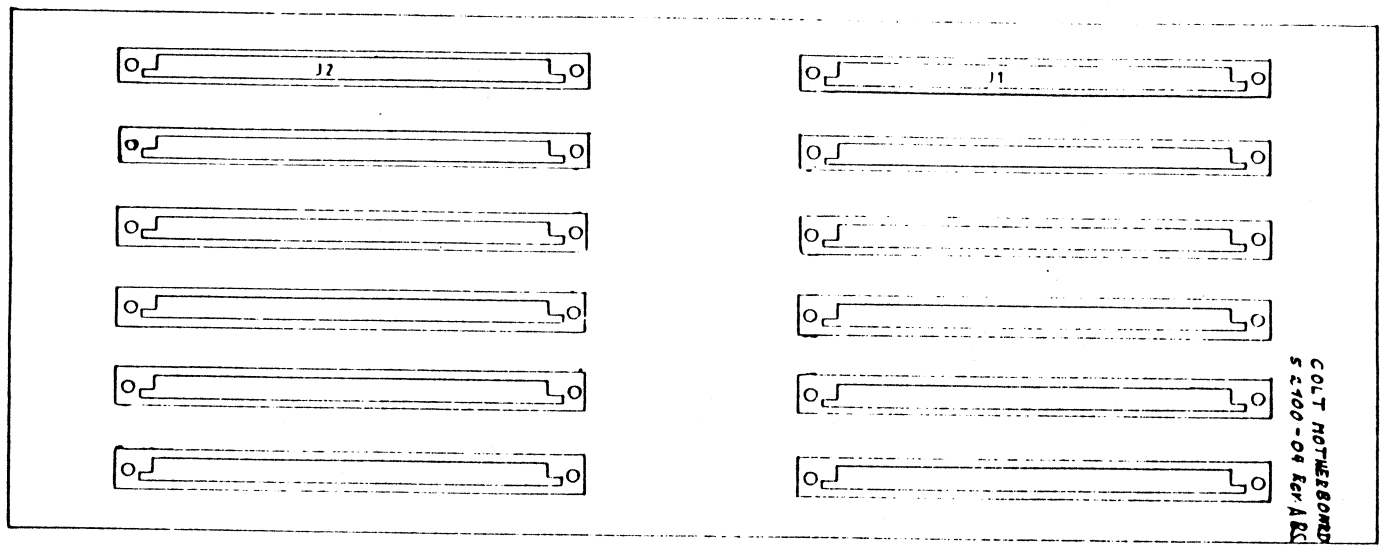

A	548	8 6 1984	CODE	ERN	DATE	NAME	DOLCH LOGIC INSTRUMENTS
B		2 3 1984		REVISIONS			COLT MOTHERBOARD
					CHECK		PART NUMBER: S 2100 - 04 A 2
					DRAWN	13 3 1984 D BERGER	SHEET 1 / 1

QTY	DLI PART NO.	DESCRIPTION	DESIGNATION
3		7611	A7, A8, A10
32		8264-20 oder 4864 (fcac-250ns)	A14-21, B2-9, C13-20, D18-25
1		2732A - 20	A9
2		7406	C1, C2
1		MPS 3640	Q1
3		1 N 4148	CR1, CR2, CR3
1		Quarz 4 MHz	Y1
2		TURN POT 1K	R1, R2
2		SIL 4 x 1K 5 pol.	R3, R4
6		SIL 4 x 22 Ω 8 pol.	R5, R6, R13, R14, R26, R28
2		SIL 8 x 1K 9 pol.	R25, R10
1		SIL 8 x 150 Ω 9 pol.	R30
1		SIL 4 x 220 Ω 8 pol.	R31
1		22 Ω	R21
1		120 Ω	R33
2		220 Ω	R18, R19
1		150 Ω	R27
1		270 Ω	R20
2		470 Ω	R23, R24
1		1K	R29
1		1K2	R22
2		1K5	R7, R34
2		4K7	R11, R16
3		10K	R8, R9, R12
2		47K	R15, R32
1	5 2000-01	Platine Atlas MP/M Proc.	Rev. G

CODE	ERN	DATE	REVISIONS	DATE	NAME
4	605	16.8.84			
5	460	31.1.84			
5	370	22.6.83			

CHECK

DRAWN 16.7.84 Wolfsberg

DOLCH LOGIC INSTRUMENTS

PART LIST
ATLAS MP/M-PROCESSOR

PART NUMBER	SHEET
5 2000-01	2/4