LAM 3250

SERVICE MANUAL INDEX

July 81

ALP 80															ORG. FORMAT				MAN	
5 0180-01	A	B	C	D	E	F	G	H	I	J	K	L	M	N	A1	A2	A3	A4	A3	A4
SCHEMATIC	X																	2		2
ASSY DRWG	X																	1		1
PINOUTS	X																	1		1
BLOCKDIAGRAMM																				

ALP 80A															ORG. FORMAT				MAN	
5 9004-01	A	B	C	D	E	F	G	H	I	J	K	L	M	N	A1	A2	A3	A4	A3	A4
SCHEMATIC	X																	1		1
ASSY DRWG	X																	1		1
PINOUTS																				
BLOCKDIAGRAMM																				

MASTER SCHEMATIC 3250															ORG. FORMAT				MAN	
5 3250-01	A	B	C	D	E	F	G	H	I	J	K	L	M	N	A1	A2	A3	A4	A3	A4
SCHEMATIC					X										2		1			3
ASSY DRWG					X												1			1
PINOUTS																		1		1
BLOCKDIAGRAMM																				

TIMEBASE															ORG.FORMAT				MAN	
5 3250-03	A	B	C	D	E	F	G	H	I	J	K	L	M	N	A1	A2	A3	A4	A3	A4
SCHEMATIC				X												1	1			2
ASSY DRWG				X													1			1
PINOUTS																		2		2
BLOCKDIAGRAMM																				

INPUT BOARD															ORG.FORMAT				MAN	
5 3250-03	A	B	C	D	E	F	G	H	I	J	K	L	M	N	A1	A2	A3	A4	A3	A4
SCHEMATIC				X													2	1		3
ASSY DRWGAC/BD				X													2			2
PINOUTS																		1		1
BLOCKDIAGRAMM																				

KEYBOARD															ORG.FORMAT				MAN	
5 3250-04	A	B	C	D	E	F	G	H	I	J	K	L	M	N	A1	A2	A3	A4	A3	A4
SCHEMATIC			X														1	1		2
ASSY DRWG			X														1			1
PINOUTS																		1		1
BLOCKDIAGRAMM																				

LAM 3250

SERVICE MANUAL INDEX July 81

CPU BOARD															ORG. FORMAT				MAN	
5 3250-05	A	B	C	D	E	F	G	H	I	J	K	L	M	N	A1	A2	A3	A4	A3	A4
SCHEMATIC		X														1		1		2
ASSY DRWG		X															1			1
PINOUTS																		2		2
BLOCKDIAGRAMM																	1			1

MEMORY BOARD 1															ORG. FORMAT				MAN	
5 3250-06	A	B	C	D	E	F	G	H	I	J	K	L	M	N	A1	A2	A3	A4	A3	A4
SCHEMATIC	X															1		1		2
ASSY DRWG	X																1			1
PINOUTS																		1		1
BLOCKDIAGRAMM																				

MENORY BOARD 2															ORG. FORMAT				MAN	
5 3250-07	A	B	C	D	E	F	G	H	I	J	K	L	M	N	A1	A2	A3	A4	A3	A4
SCHEMATIC	X															1		1		2
ASSY DRWG	X																1			1
PINOUTS																		1		1
BLOCKDIAGRAMM																				

RASTER COUNTER															ORG.FORMAT				MAN	
5 4850-03	A	B	C	D	E	F	G	H	I	J	K	L	M	N	A1	A2	A3	A4	A3	A4
SCHEMATIC									X							1	1			2
ASSY DRWG									X								1			1
PINOUTS																		1		1
BLOCKDIAGRAMM																	1			1

CHARACTER BOARD															ORG.FORMAT				MAN	
5 4850-04	A	B	C	D	E	F	G	H	I	J	K	L	M	N	A1	A2	A3	A4	A3	A4
SCHEMATIC							X								1		1			2
ASSY DRWG							X										1			1
PINOUTS																		1		1
BLOCKDIAGRAMM																	1			1

SBLA BOARD															ORG.FORMAT				MAN	
5 4850-06	A	B	C	D	E	F	G	H	I	J	K	L	M	N	A1	A2	A3	A4	A3	A4
SCHEMATIC									X							1	1			2
ASSY DRWG									X								1			1
PINOUTS																		1		1
BLOCKDIAGRAMM																	1			1

LAM 3250

SERVICE MANUAL INDEX

July 81

CONTROL BOARD															ORG. FORMAT				MAN	
5 4850-07	A	B	C	D	E	F	G	H	I	J	K	L	M	N	A1	A2	A3	A4	A3	A4
SCHEMATIC								X								2	1			3
ASSY DRWG								X									1			1
PINOUTS																		1		1
BLOCKDIAGRAMM																	1			1

GPIB/THRESHOLD BOARD															ORG. FORMAT				MAN	
5 4850-08 A2	A	B	C	D	E	F	G	H	I	J	K	L	M	N	A1	A2	A3	A4	A3	A4
SCHEMATIC							X										3			3
ASSY DRWG							X										1			1
PINOUTS																		2		2
BLOCKDIAGRAMM																				

TRIGGER BOARD															ORG. FORMAT				MAN	
5 4850-10	A	B	C	D	E	F	G	H	I	J	K	L	M	N	A1	A2	A3	A4	A3	A4
SCHEMATIC									X							2	1			3
ASSY DRWG									X								1			1
PINOUTS																		1		1
BLOCKDIAGRAMM																	1			1

MONITOR 3Q															ORG.FORMAT				MAN	
	A	B	C	D	E	F	G	H	I	J	K	L	M	N	A1	A2	A3	A4	A3	A4
SCHEMATIC																1				1
ASSY DRWG																2				2
PINOUTS																		1		1
BLOCKDIAGRAMM																				

MONITOR TM															ORG.FORMAT				MAN	
	A	B	C	D	E	F	G	H	I	J	K	L	M	N	A1	A2	A3	A4	A3	A4
SCHEMATIC																	4			4
ASSY DRWG																	5			5
PINOUTS																				
BLOCKDIAGRAMM																				

GPIB BUS CONNECTOR AND VIDEO CONNECTOR															ORG.FORMAT				MAN	
4850-10 5/6of9	A	B	C	D	E	F	G	H	I	J	K	L	M	N	A1	A2	A3	A4	A3	A4
SCHEMATIC																				
ASSY DRWG																				
PINOUTS																		2		2
BLOCKDIAGRAMM																				

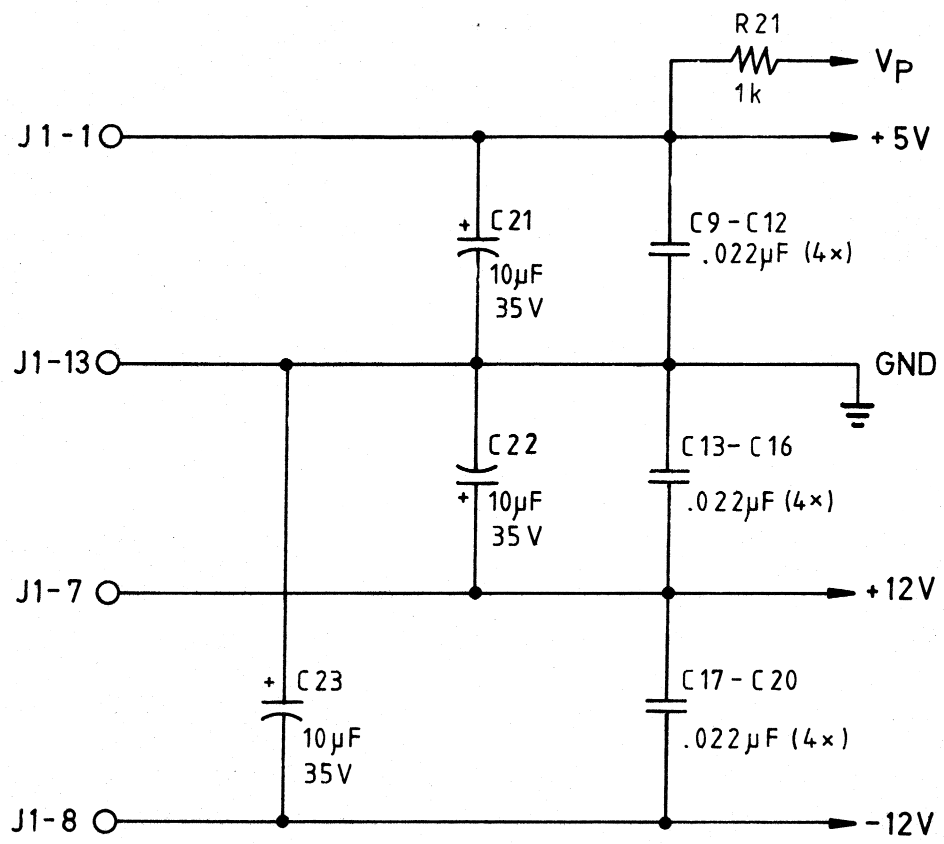

6.5.80	DATE	NAME	Mü	DOLCH LOGIC INSTRUMENTS	
	ERN	REVISIONS DATE	6.5.80	ALP 80	
A	CODE	CHECK DRAWN		PART NUMBER: 5 0180 - 01	SHEET 1/2

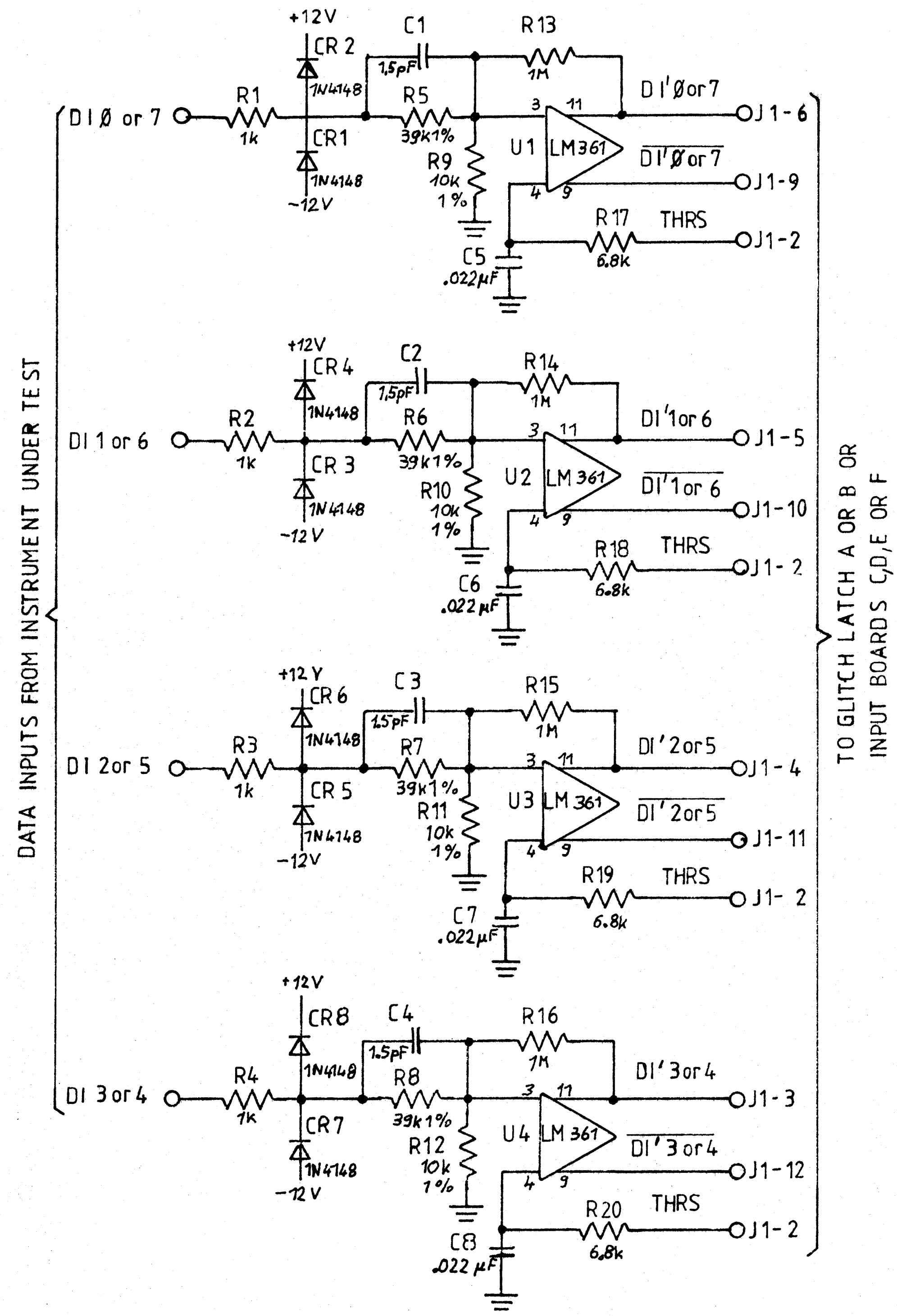

CODE	ERN	DATE	DATE	NAME	CHECK	DRAWN	DOLCH LOGIC INSTRUMENTS
	REVISIONS						ALP 80
							PART NUMBER: 5 0180 - 01 / SHEET

POS.	ITEM	QTY.	POS.	ITEM	QTY.
	LM 361 / NE 529	4		Buchsenleiste sp. (Comatel)	1
	1N4148	8			
	1KΩ	5			
	1MΩ	4			
	6K8	4			
	10KΩ 1%	4			
	39KΩ 1%	4			
	1p5	4			
	22nF	16			
	10µF / 35V (Tantal)	3			

Mengenangabe nur für eine Leiterplatte

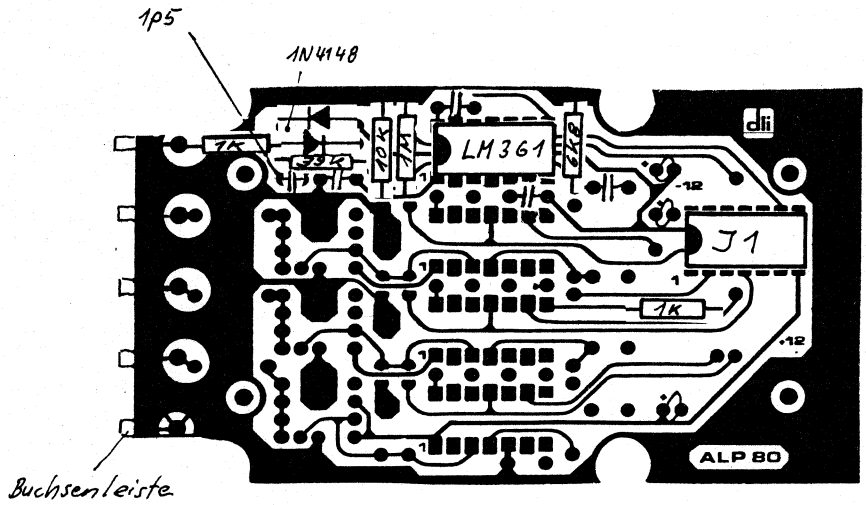

CODE	ERN	DATE	REVISIONS	DATE	NAME
				CHECK	
				DRAWN	19.9.80 Claus

DOLCH LOGIC INSTRUMENTS

ASS'Y DRAWING - PART LIST

ALP 80

PART NUMBER: 5 0180 - 01A

SHEET

PIN ASIGNET
ALP CONNECTOR
ALP SIDE

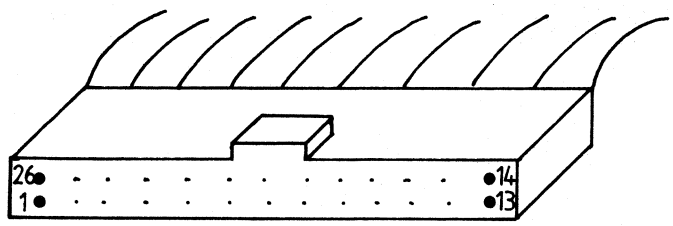

PIN ASSIGNEMENT
ALP INPUT
CONNECTOR
LAM SIDE

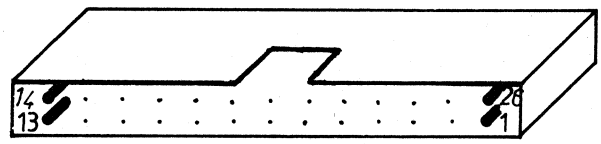

+12 V	7	8	-12 V
DI'Ø OR 7	6	9	$\overline{\text{DI'Ø OR 7}}$
DI'1 OR 6	5	10	$\overline{\text{DI'1 OR 6}}$
DI'2 OR 5	4	11	$\overline{\text{DI'2 OR 5}}$
DI'3 OR 4	3	12	$\overline{\text{DI'3 OR 4}}$
THRS	2	13	GND
+5V	1	14	

INPUT CONNECTOR ALP

+12V	13	14	-12V
DI'Ø	12	15	$\overline{\text{DI'Ø}}$
DI'1	11	16	$\overline{\text{DI'1}}$
DI'2	10	17	$\overline{\text{DI'2}}$
DI'3	9	18	$\overline{\text{DI'3}}$
THRES	8	19	GND
+5V	7	20	+5V
GND	6	21	THRES
$\overline{\text{DI'4}}$	5	22	DI'4
$\overline{\text{DI'5}}$	4	23	DI'5
$\overline{\text{DI'6}}$	3	24	DI'6
$\overline{\text{DI'7}}$	2	25	DI'7
-12V	1	26	+12V

			DATE		NAME		
			ERN	REVISIONS	DATE		
			CODE			CHECK	DRAWN

DOLCH LOGIC INSTRUMENTS

ALP 80

PART NUMBER: 5 0180 - 01

SHEET: 1/1

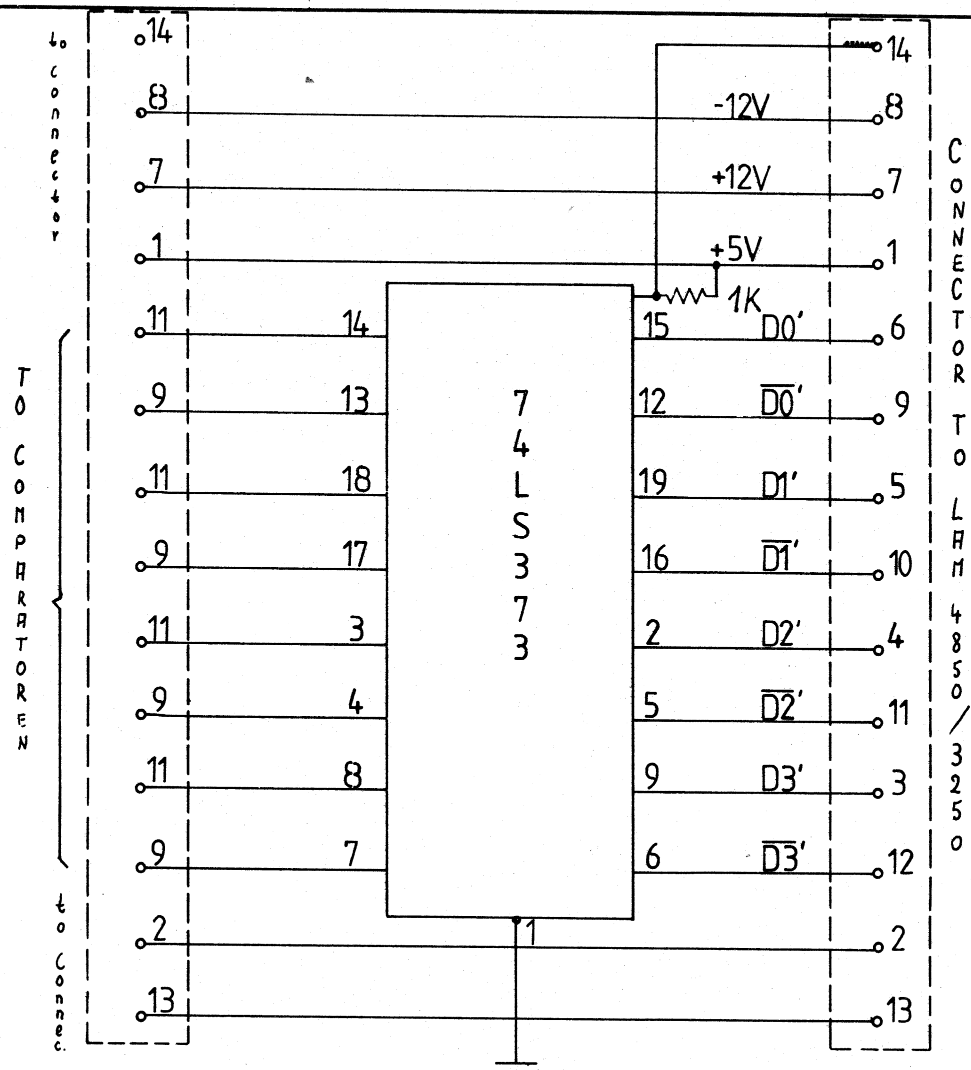

DOLCH LOGIC INSTRUMENTS

ÄNDERUNG ALP80
ZUM ALP80 A

CODE	ERN	DATE

REVISIONS

DATE	NAME
CHECK	
DRAWN	

PART NUMBER

SHEET

POS.	ITEM	QTY
	LM 361	4
	1N4148	8
	1KΩ	6
	1MΩ	4
	6K8	4
	10K 1%	4
	39K 1%	4

POS	ITEM	QTY
	1p5	4
	22nF	16
	10µF/35V (Tantal)	3
	Buchsenleiste 5pol. (Comatel)	1
	74 LS 373	1

Mengenangabe nur für eine Leiterplatte

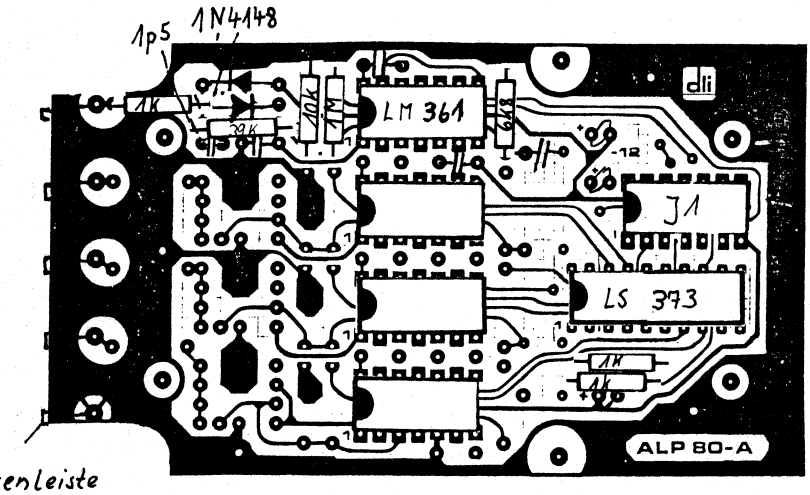

Buchsenleiste

						Maßstab: LAM 4850
						ASS'Y DRAWING - PART LIST
					Datum	Name
				Bearb.		
				Gepr.		
				Norm		
						DOLCH LOGIC INSTRUMENTS GMBH
						ALP 80 - A
						Blatt BL
Zust.	Änderung	Datum	Name			

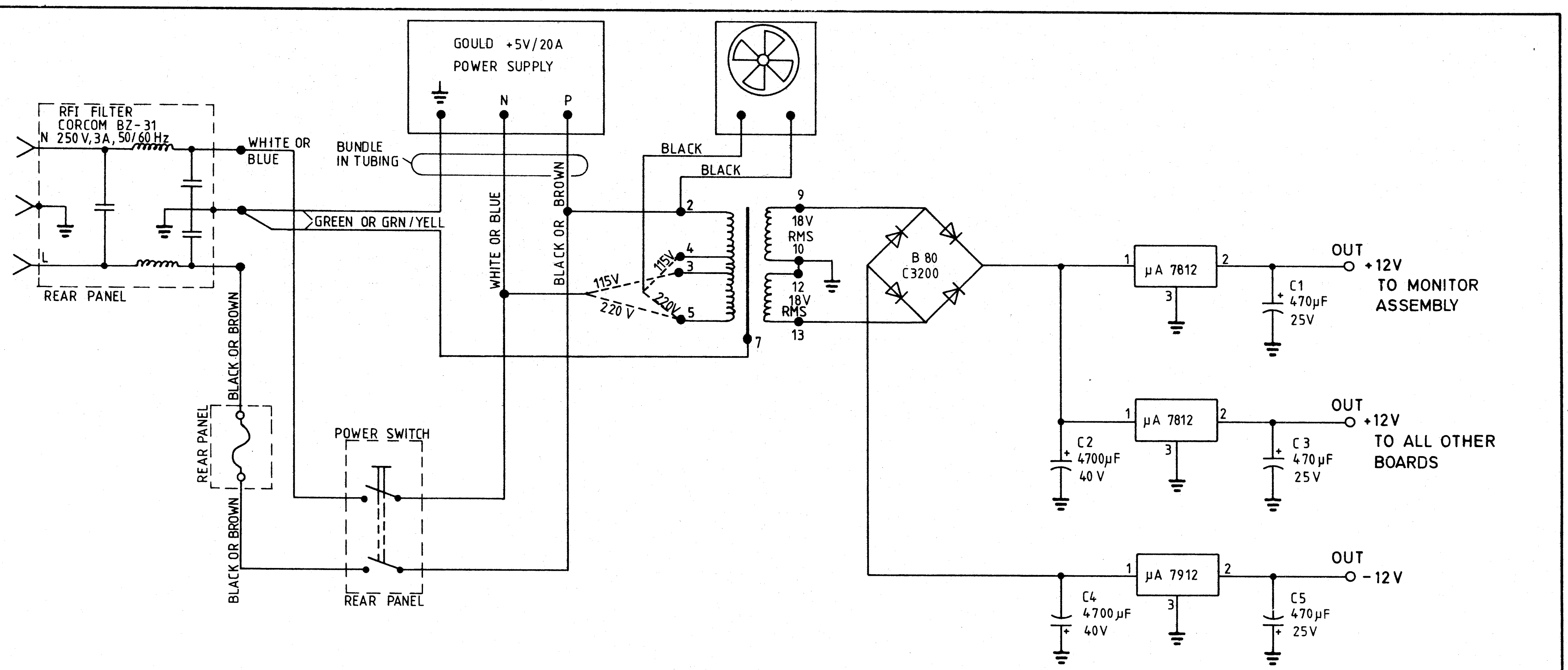

DOLCH
LOGIC INSTRUMENTS

MASTER SCHEMATIC 3250

CODE	ERN	DATE
A		6.5.80
B		10.6.80
E		15.5.81

REVISIONS

	DATE	NAME
DRAWN	6.5.80	[illegible]
CHECK		

PART NUMBER: 5 3250-01

SHEET 1 / 3

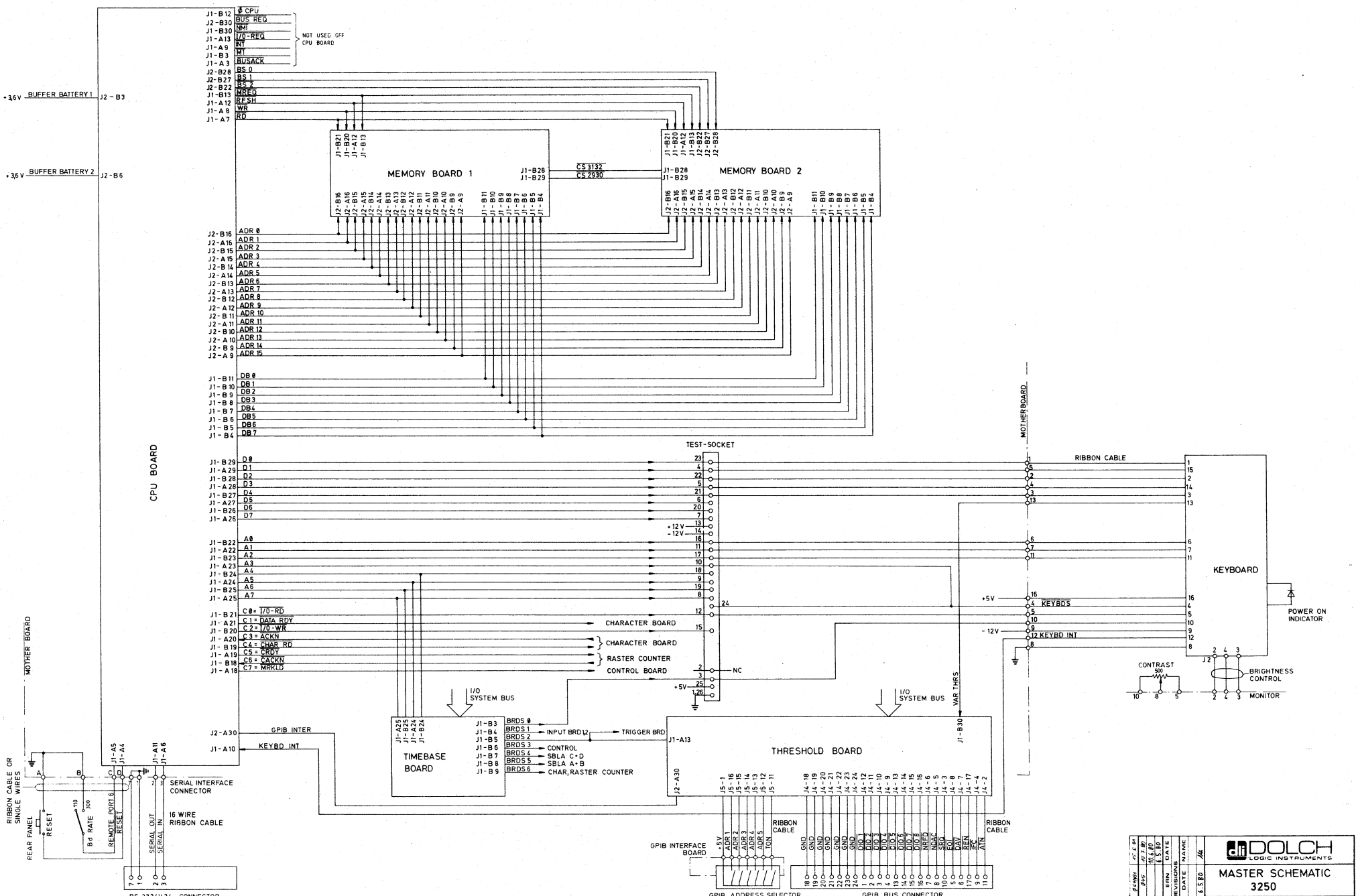
CPU BOARD
MOTHER BOARD
NOT USED OFF CPU BOARD
BUFFER BATTERY 1
BUFFER BATTERY 2
MEMORY BOARD 1
MEMORY BOARD 2
CS 3132
CS 2930
TEST-SOCKET
RIBBON CABLE
KEYBOARD
POWER ON INDICATOR
CONTRAST
BRIGHTNESS CONTROL
MONITOR
CHARACTER BOARD
RASTER COUNTER
CONTROL BOARD
I/O SYSTEM BUS
TIMEBASE BOARD
THRESHOLD BOARD
TRIGGER BRD
INPUT BRD
CONTROL
SBLA C+D
SBLA A+B
CHAR, RASTER COUNTER
GPIB INTER
KEYBD INT
SERIAL INTERFACE CONNECTOR
16 WIRE RIBBON CABLE
RIBBON CABLE OR SINGLE WIRES
REAR PANEL
RESET
Bd RATE
REMOTE PORT 6
SERIAL OUT
SERIAL IN
RS 232/V24 CONNECTOR
GPIB INTERFACE BOARD
GPIB ADDRESS SELECTOR OPTION 01 ONLY
GPIB BUS CONNECTOR OPTION 01 ONLY
DOLCH LOGIC INSTRUMENTS
MASTER SCHEMATIC 3250
PART NUMBER 5 3250-01
SHEET 2/3

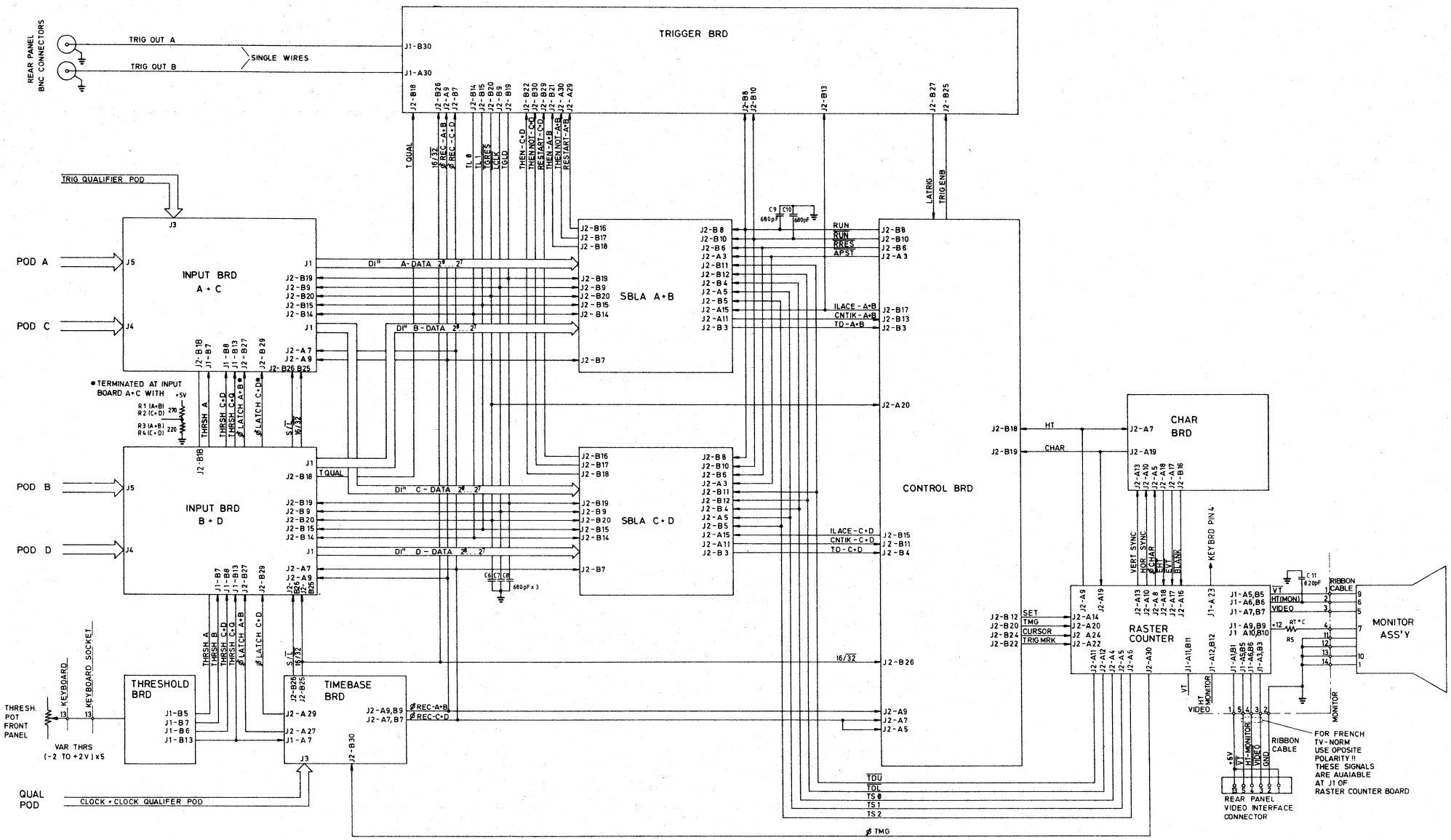

E	Rev/Rev	10.6.80					
B		6.5.80					
A							
CODE	ERN	DATE	REVISIONS	DATE	NAME		
				CHECK			
				DRAWN	6.5.80		

DOLCH LOGIC INSTRUMENTS

MASTER SCHEMATIC 3250

PART NUMBER	SHEET
5 3250-01	3/3

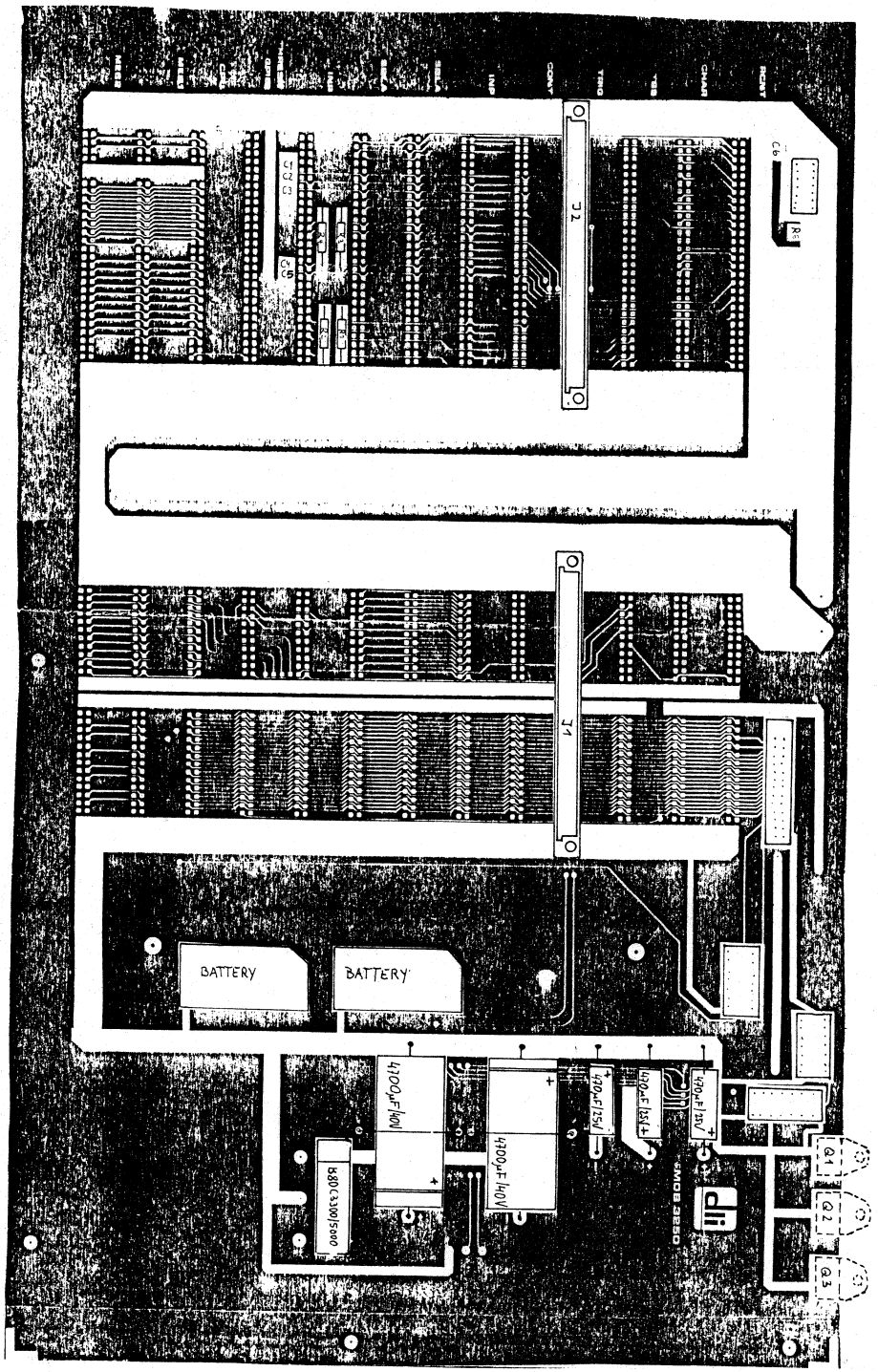

POS.	ITEM	QTY	POS	ITEM	QTY
Q 1,2	VOLTAGE REGULATOR 7812	2			
Q3	VOLTAGE REGULATOR 7912 *	1			
	Elko's 470µF/25V	3			
	Elko's 4700µF/40V	2			
	BATTERY	2			
	J1 VG-LEISTEN 64pol.	13			
	J2 VG-LEISTEN 64pol.	13			
	GLEICHRICHTER B80 C3300/5000	1			
	14pol. PRECISION SOCKET	2			
	16pol. PRECISION SOCKET	2			
	WIRE-WRAP CONN. 26pol.	1			
C 1-5	680pF	5			
R5	NTC	1			
R 3,4	220Ω	2			
R 1,2	270Ω	2			
C6	620pF	1			

* 7912 isoliert montieren

Zust	Änderung	Datum	Name

	Datum	Name
Bearb.		
Gepr.	19.9.80	Claus
Norm		

5 3250-01

Maßstab LAM 3250

ASS'Y DRAWING - PART LIST

DOLCH LOGIC INSTRUMENTS GMBH

MOB

Rev. C

Blatt 81

Signal	Pin	Pin	Signal
REMOTE PORT 6	8	9	RESET
GND	7	10	GPIB INTER
	6	11	
	5	12	
	4	13	
REMOTE PORTØ SERIAL IN	3	14	
REMOTE PORT2 SERIAL OUT	2	15	
GND	1	16	

Signal	Pin	Pin	Signal
+12V	13	14	-12V
CØ=I/O-RD	12	15	C2=I/O-WR
A 1	11	16	A Ø
A 3	10	17	A 2
A 5	9	18	A 4
A 7	8	19	A 6
D 7	7	20	D 6
D 5	6	21	D 4
D 3	5	22	D 2
D 1	4	23	D Ø
BRDS Ø	3	24	KEYBDS
NC	2	25	+5V
GND	1	26	GND

	5 4850 - 01 SHEET
KEYBORD	3
MONITOR	3
VIDEO INTERFACE	3
RS 323 / V24	4
GPIB	5
VIDEO INTERFACE	6
MONITOR	9

DOLCH LOGIC INSTRUMENTS

MOTHERBOARD

CODE	ERN	DATE	REVISIONS	DATE	NAME	CHECK	DRAWN	PART NUMBER	SHEET
								5 3250 - 01	1/1

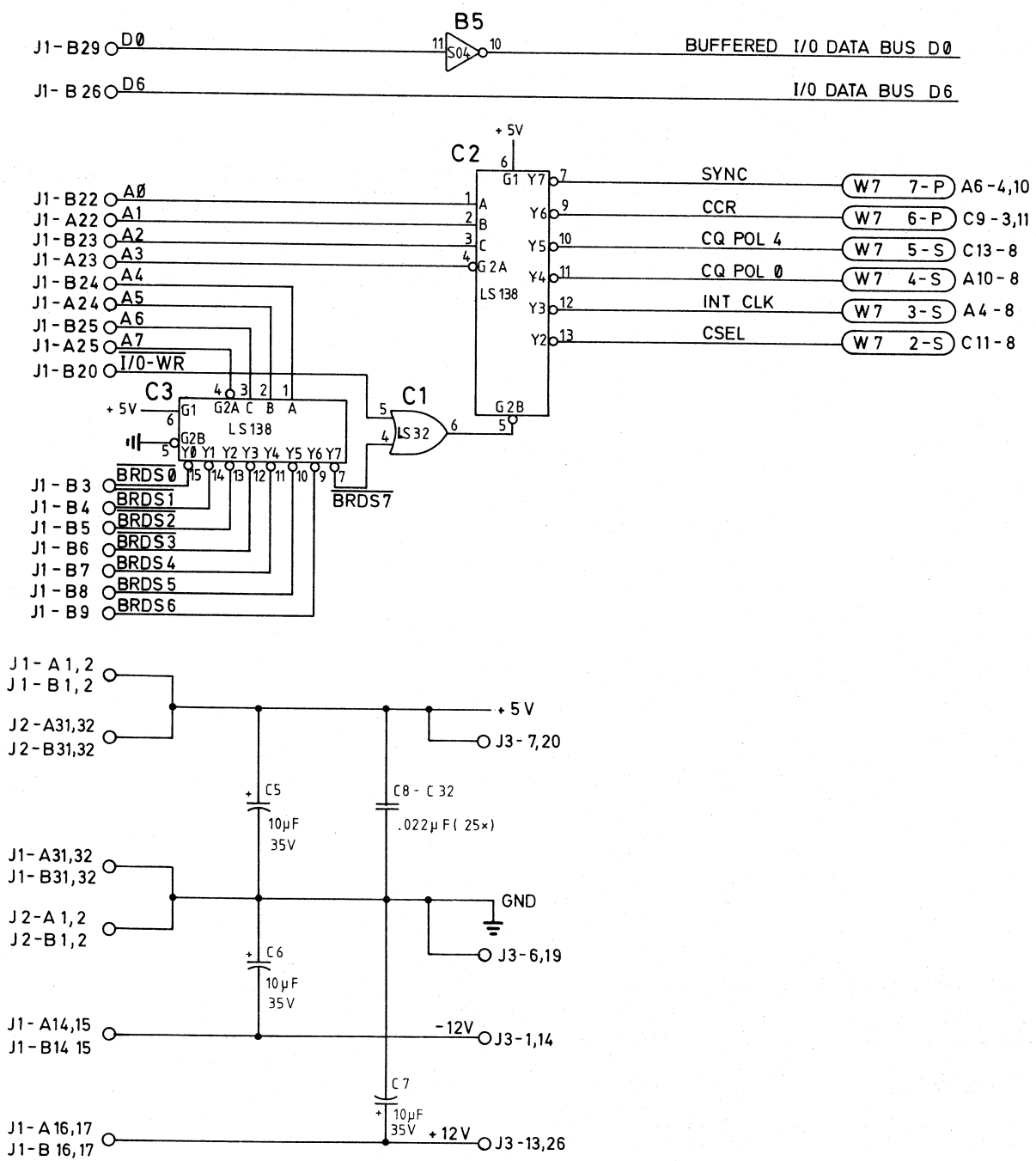

REVISIONS			
CODE	ERN	DATE	NAME
D	Ø69	5.12.80	
C	047	10.7.80	
B		6.5.80	
CHECK			
DRAWN		6.5.80	

DOLCH LOGIC INSTRUMENTS

TIMEBASE

PART NUMBER	SHEET
5 3250-02	1/2

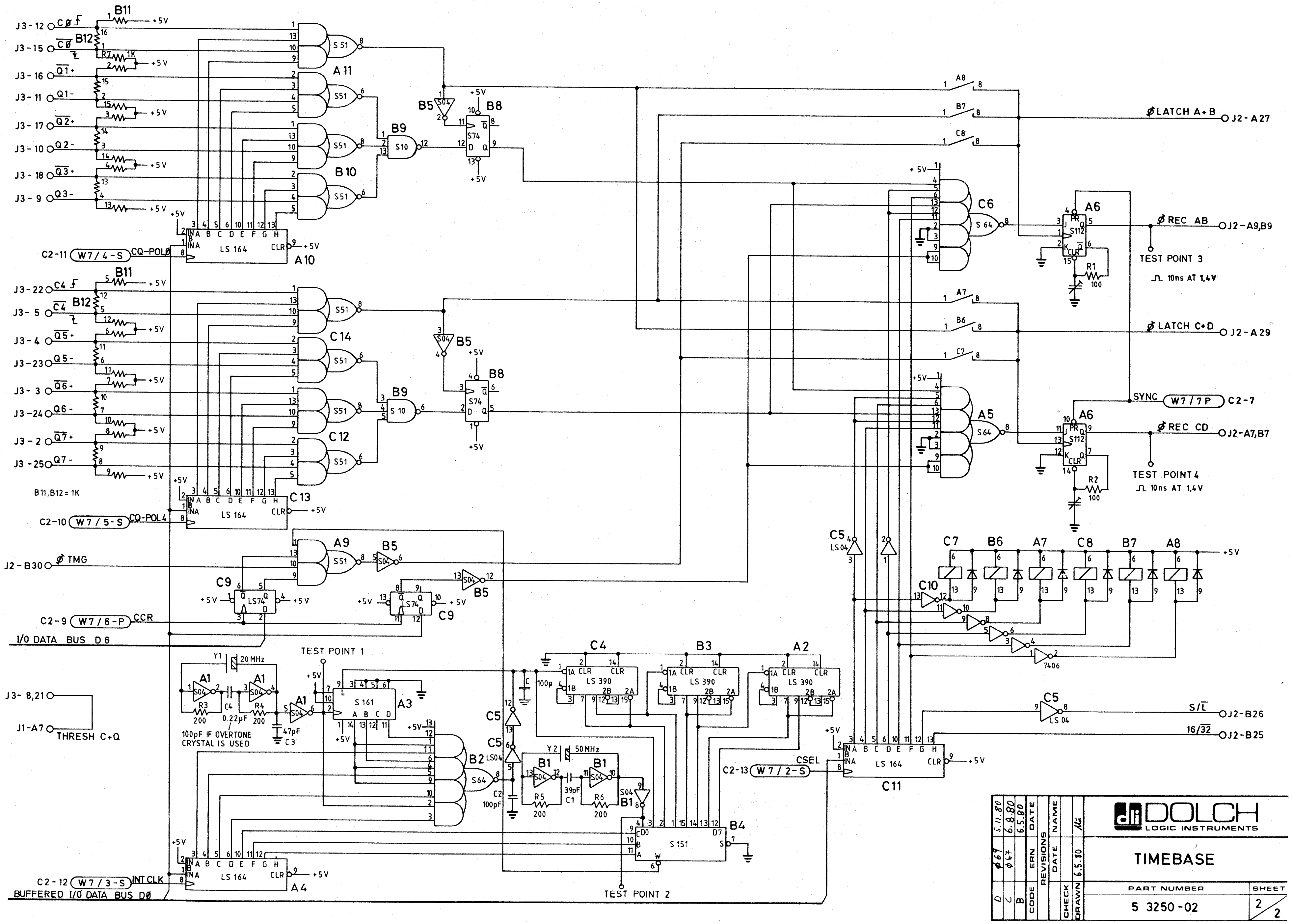
DOLCH
LOGIC INSTRUMENTS
TIMEBASE
PART NUMBER
5 3250-02
SHEET 2/2
DRAWN 6.5.80
REVISIONS
CODE ERN DATE
B 6.5.80
C ø47 6.8.80
D ø69 5.11.80
J3-12 Cø
J3-15 Cø
J3-16 Q1+
J3-11 Q1-
J3-17 Q2+
J3-10 Q2-
J3-18 Q3+
J3-9 Q3-
J3-22 C4
J3-5 C4
J3-4 Q5+
J3-23 Q5-
J3-3 Q6+
J3-24 Q6-
J3-2 Q7+
J3-25 Q7-
B11,B12 = 1K
C2-11 W7/4-S CQ-POLø
C2-10 W7/5-S CQ-POL4
J2-B30 ø TMG
C2-9 W7/6-P CCR
I/O DATA BUS D6
J3-8,21
J1-A7 THRESH C+Q
C2-12 W7/3-S INT CLK
BUFFERED I/O DATA BUS Dø
TEST POINT 1
TEST POINT 2
100pF IF OVERTONE CRYSTAL IS USED
20 MHz
50 MHz
ø LATCH A+B J2-A27
ø REC AB J2-A9,B9
TEST POINT 3
10ns AT 1,4V
ø LATCH C+D J2-A29
SYNC W7/7P C2-7
ø REC CD J2-A7,B7
TEST POINT 4
10ns AT 1,4V
S/L J2-B26
16/32 J2-B25
C2-13 W7/2-S CSEL

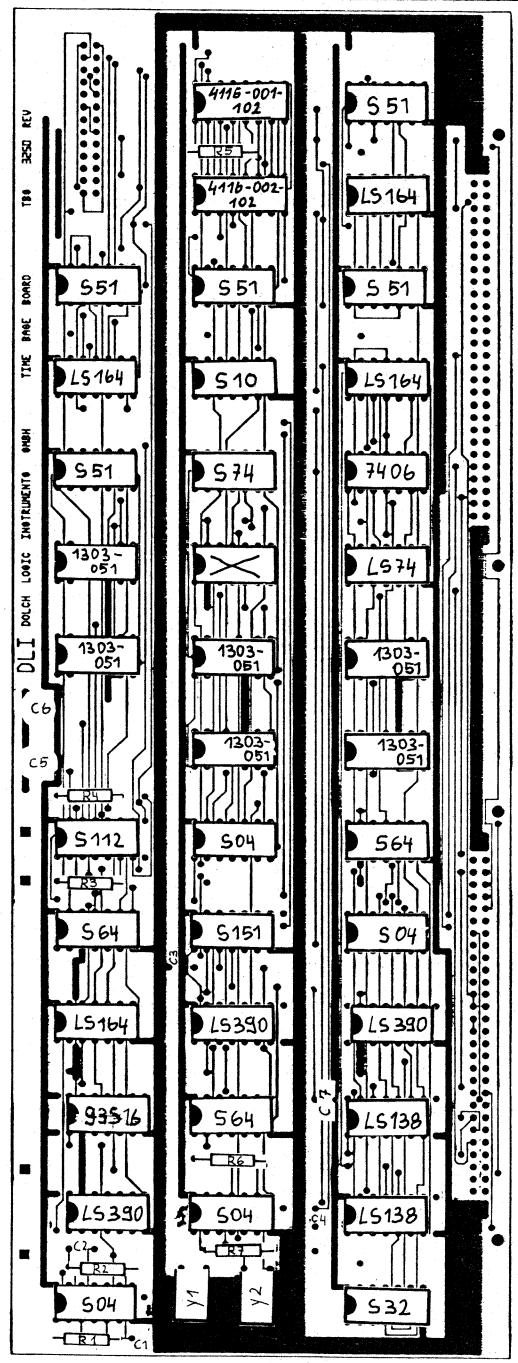

POS.	ITEM	QTY
	74S04	3
	74S64	3
	74S151	1
	74S51	5
	74S10	1
	74S74	1
	74S112	1
	74S32	1
	74LS390	3
	74LS164	4
	74LS74	1
	74S04	1
	74LS138	2
	93S16	1
	7406	1
Y2	CRYSTAL 50MHz	1
Y1	CRYSTAL 20MHz	1
R3,4	100Ω	2
R 12,67	200Ω	4
R5	1K	1
	Relais 1303-051	6

POS	ITEM	QTY
	NETZWERK 4116R-001-102	1
	NETZWERK 4116R-002-102	1
C1	47pF	1
C2,3	100pF	3
C4	39pF	1
	22nF	11
	6,8µF/35V Tantal	3
C5,6	C-TRIMMER 3-30pF	2
	STECKERLEISTE 26pol. gew.	1
	14p Socket	21
	16p Socket	10

Zust	Änderung	Datum	Name

	Datum	Name
Bearb	5.12.80	Gehrke
Gepr		
Norm		

5 3250 - 02

Maßstab LAM 3250

ASS'Y DRAWING - PART LIST

DOLCH LOGIC INSTRUMENTS GMBH

T'BASE Rev. D

Blatt

Bi

J1

A	Pin	B
+5V	1	+5V
+5V	2	+5V
	3	$\overline{\text{BRDS Ø}}$
	4	$\overline{\text{BRDS 1}}$
	5	$\overline{\text{BRDS 2}}$
	6	$\overline{\text{BRDS 3}}$
THRS C+O	7	$\overline{\text{BRDS 4}}$
	8	$\overline{\text{BRDS 5}}$
	9	$\overline{\text{BRDS 6}}$
	10	
	11	
	12	
	13	
-12V	14	-12V
-12V	15	-12V
+12V	16	+12V
+12V	17	+12V
C7=$\overline{\text{MRKLD}}$	18	C6=$\overline{\text{CACKN}}$
C5=$\overline{\text{CRDY}}$	19	C4=$\overline{\text{CHAR RD}}$
C3=$\overline{\text{ACKN}}$	20	C2=$\overline{\text{I/O-WR}}$
C1=$\overline{\text{DATA RDY}}$	21	CØ=$\overline{\text{I/O-RD}}$
A 1	22	A Ø
A 3	23	A 2
A 5	24	A 4
A 7	25	A 6
D 7	26	D 6
D 5	27	D 4
D 3	28	D 2
D 1	29	D Ø
	30	
GND	31	GND
GND	32	GND

J2

A	Pin	B
GND	1	GND
GND	2	GND
	3	
	4	
NC	5	NC
	6	
Ø REC C+D	7	Ø REC C+D
	8	
Ø REC A+B	9	Ø REC A+B
	10	
	11	
	12	
	13	
	14	
	15	
	16	
	17	
	18	
	19	
	20	
	21	
	22	
	23	
	24	
	25	16/$\overline{\text{32}}$
	26	SAMPLE/$\overline{\text{LATCH}}$
Ø $\overline{\text{LATCH A+B}}$	27	Ø $\overline{\text{LATCH A+B}}$
	28	
Ø $\overline{\text{LATCH C+D}}$	29	Ø $\overline{\text{LATCH C+D}}$
	30	Ø TMG
+5V	31	+5V
+5V	32	+5V

CODE	ERN	DATE

REVISIONS

DATE	NAME

CHECK

DRAWN

DOLCH LOGIC INSTRUMENTS

TIMEBASE

PART NUMBER	SHEET
5 3250 - 02	1/2

J 3

+12V	13	14	-12V
CLK Ø+	12	15	CLK Ø-
Q 1-	11	16	Q 1+
Q 2-	10	17	Q 2+
Q 3-	9	18	Q 3+
THRS C+Q	8	19	GND
+5V	7	20	+5V
GND	6	21	THRES C+Q
CLK 4-	5	22	CLK 4+
Q 5+	4	23	Q 5-
Q 6+	3	24	Q 6-
Q 7+	2	25	Q 7-
-12V	1	26	+12V

CODE	ERN	DATE	NAME	CHECK	DRAWN
REVISIONS			DATE		

DOLCH LOGIC INSTRUMENTS

TIMEBASE

PART NUMBER: 5 3250 - 02

SHEET: 2/2

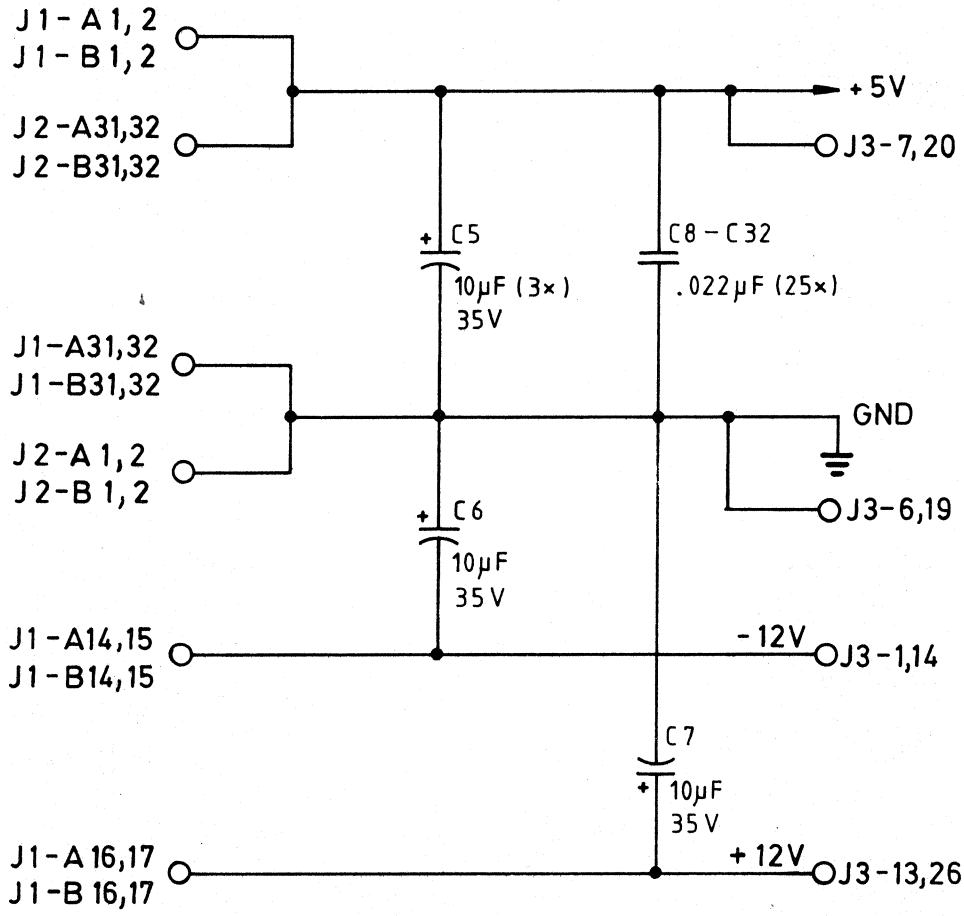

CODE	DATE	NAME
D	24.6.81	
B	6.8.80	
A	6.5.80	

REVISIONS

	DATE	
CHECK		
DRAWN	6.5.80	

DOLCH LOGIC INSTRUMENTS

INPUT BOARD

PART NUMBER: 5 3250-03

SHEET: 1/3

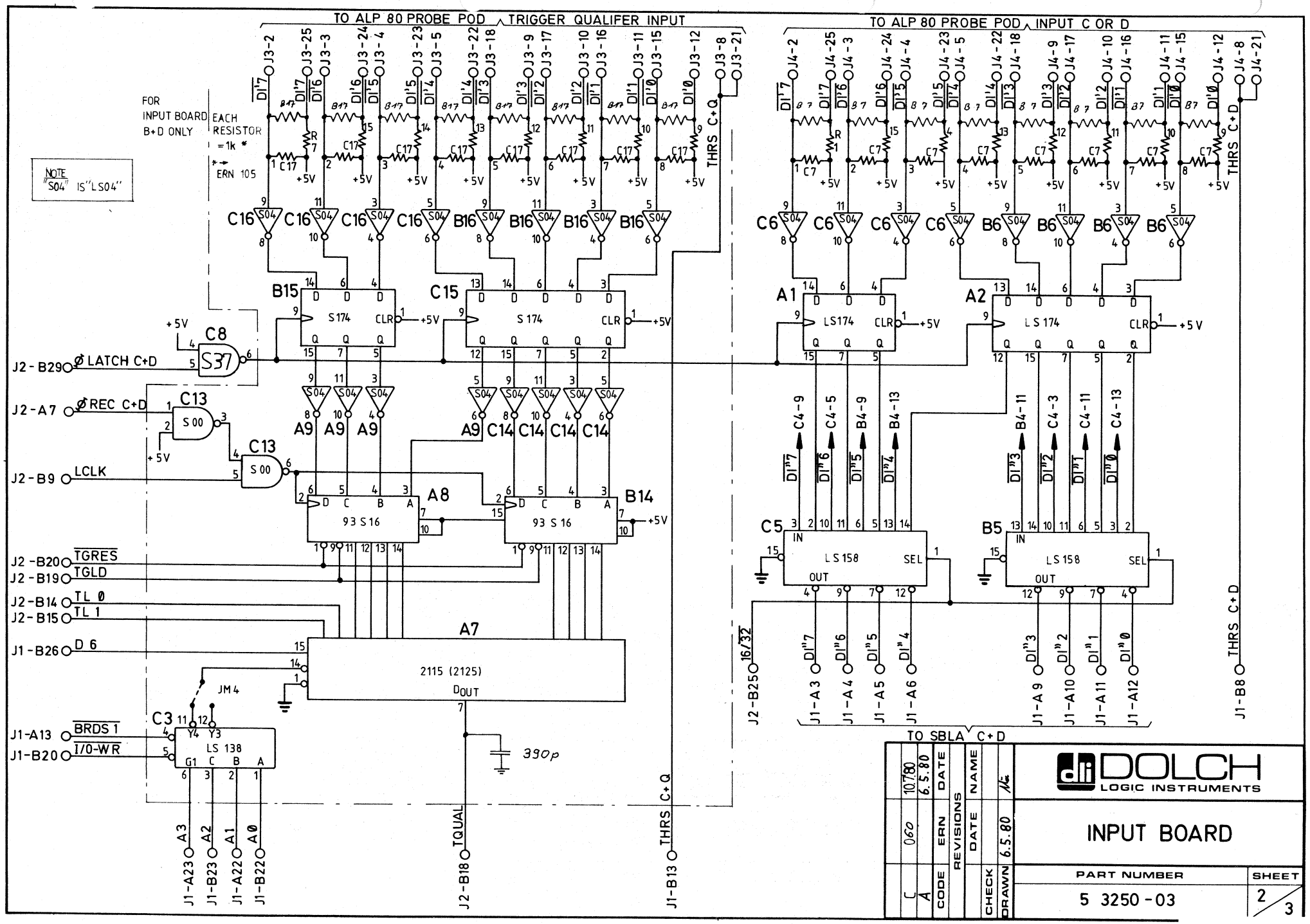
TO ALP 80 PROBE POD
TRIGGER QUALIFER INPUT
TO ALP 80 PROBE POD
INPUT C OR D
FOR INPUT BOARD B+D ONLY
EACH RESISTOR =1k *
* → ERN 105
NOTE "S04" IS "LS04"
J2 - B29 Ø LATCH C+D
J2 - A7 Ø REC C+D
J2 - B9 LCLK
J2 - B20 TGRES
J2 - B19 TGLD
J2 - B14 TL Ø
J2 - B15 TL 1
J1 - B26 D 6
J1-A13 BRDS 1
J1-B20 I/O-WR
J1-A23 A3
J1-B23 A2
J1-A22 A1
J1-B22 A0
J2 - B18 TQUAL
J1-B13 THRS C+Q
J2-B25 16/32
J1-B8 THRS C+D
J1-A3
J1-A4
J1-A5
J1-A6
J1-A9
J1-A10
J1-A11
J1-A12
TO SBLA C+D
C8 S37
C13 S 00
B15 S 174
C15 S 174
A1 LS174
A2 LS 174
A8 93 S 16
B14 93 S 16
C5 LS 158
B5 LS 158
A7 2115 (2125)
C3 LS 138
JM4
390p
DOLCH LOGIC INSTRUMENTS
INPUT BOARD
PART NUMBER
5 3250 - 03
SHEET
2/3
CODE
ERN
DATE
REVISIONS
NAME
CHECK
DRAWN
6.5.80

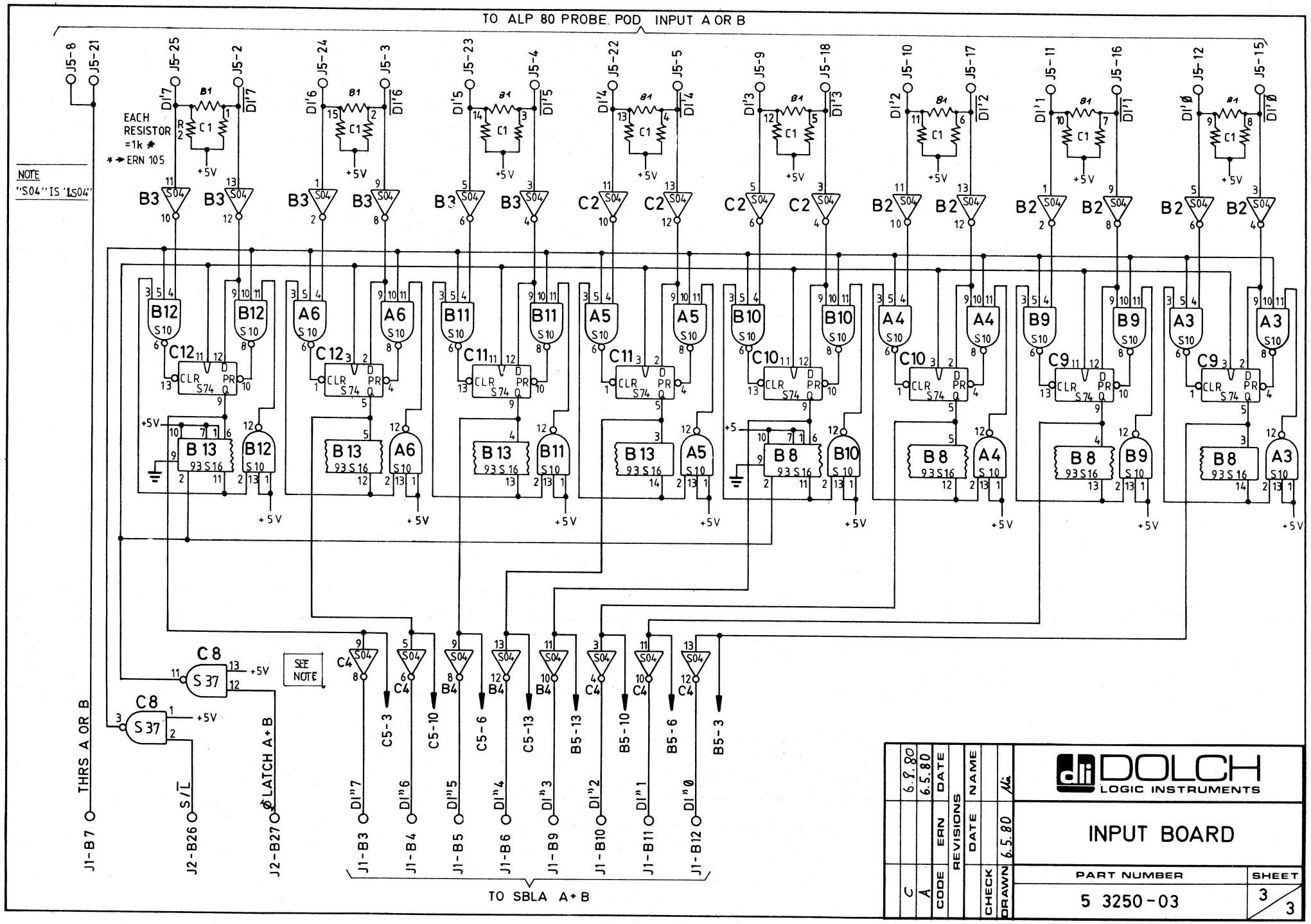
TO ALP 80 PROBE POD INPUT A OR B
EACH RESISTOR =1k
* → ERN 105
NOTE
"S04" IS '1S04'
SEE NOTE
THRS A OR B
S/L
LATCH A+B
TO SBLA A+B
DOLCH
LOGIC INSTRUMENTS
INPUT BOARD
PART NUMBER
5 3250-03
SHEET
3/3
CODE
A
C
ERN
REVISIONS
DATE
6.5.80
6.8.80
NAME
DATE
CHECK
DRAWN
6.5.80

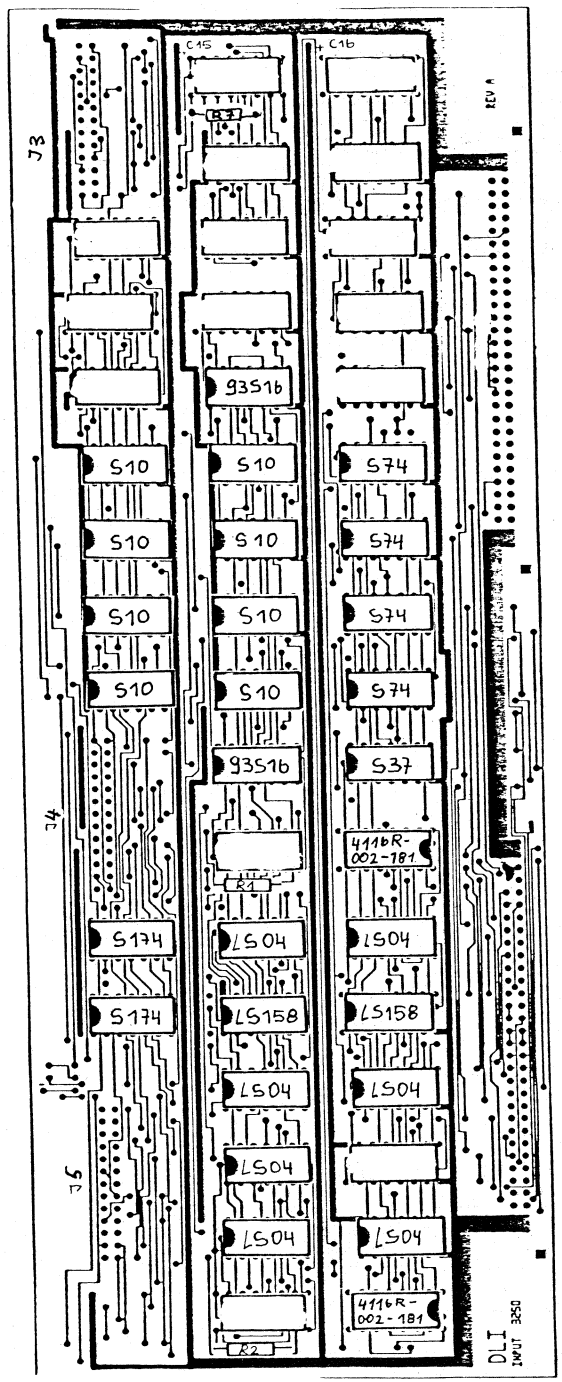

POS.	ITEM	QTY	POS	ITEM	QTY
	LS04	7			
	S10	8			
	S37	1			
	S74	4			
	LS158	2			
	S174	2			
	93S16	2			
	NETZWERKE 4116R-002-181	2			
R 1,2,7	180Ω	3			
C 15,16	10/35V	2			
	22nF	13			
J 3,4,5	26pol. Leiste gew.	3			
	14pol. Socket	25			
	16pol. Socket	18			

Maßstab LAM 3250

ASS'Y DRAWING - PART LIST

	Datum	Name
Bearb	24.6.81	Gehrke
Gepr		
Norm		

DOLCH LOGIC INSTRUMENTS GMBH

5 3250-0341

INPUT-BOARD(AC)

Rev. D

Blatt

Zust. Änderung Datum Name

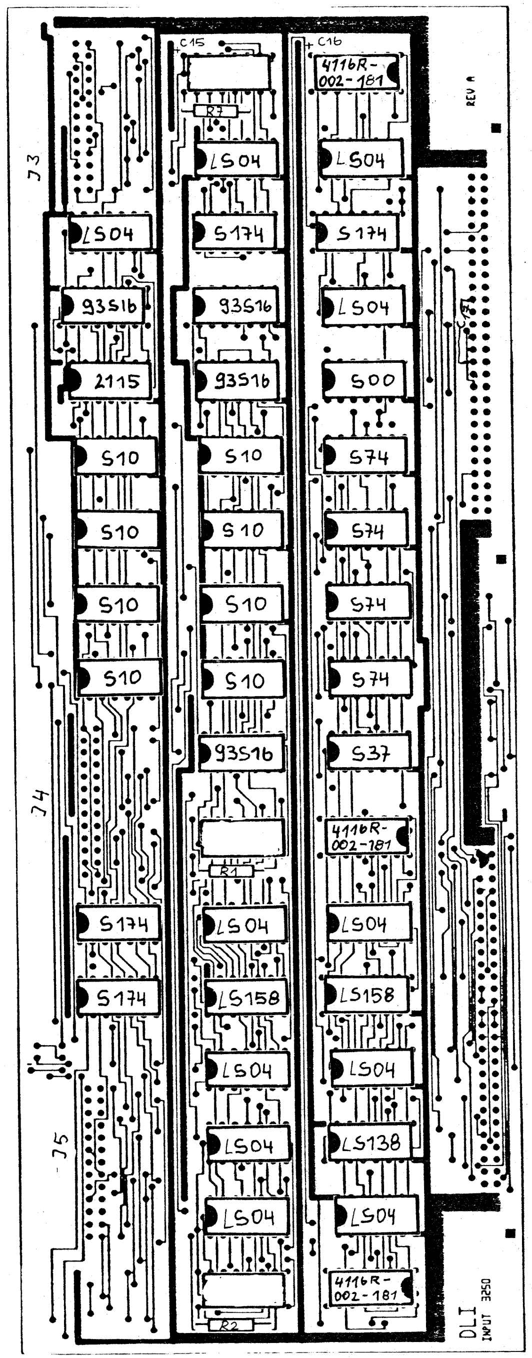

POS.	ITEM	QTY	POS	ITEM	QTY
	S00	1			
	LS04	11			
	S10	8			
	S37	1			
	S74	4			
	LS138	1			
	LS158	2			
	S174	4			
	2115	1			
	93S16	4			
	NETZWERKE 4116R-002-181	3			
R 1,2,7	180Ω	3			
C 15,16	10/35V	2			
	22nF	13			
J 3,4,5	26pol. Leiste gew.	3			
	14pol. Socket	25			
	16pol. Socket	18			
C17	390p	1			

Maßstab		LAM 3250
ASS'Y DRAWING - PART LIST		
	Datum	Name
Bearb.	24.6.81	Gehrke
Gepr		
Norm		
DOLCH LOGIC INSTRUMENTS GMBH		
5 3250-03A2	INPUT-BOARD (BD)	Rev D
Zust.	Änderung	Datum / Name
Blatt	Bl	

A	J1	B
+5V	1	+5V
+5V	2	+5V
DI"C 7 OR DI"D 7	3	DI"A 7 OR DI"B 7
DI"C 6 OR DI"D 6	4	DI"A 6 OR DI"B 6
DI"C 5 OR DI"D 5	5	DI"A 5 OR DI"B 5
DI"C 4 OR DI"D 4	6	DI"A 4 OR DI"B 4
	7	THRS A OR THRS B
	8	THRS C+D
DI"C 3 OR DI"D 3	9	DI"A 3 OR DI"B 3
DI"C 2 OR DI"D 2	10	DI"A 2 OR DI"B 2
DI"C 1 OR DI"D 1	11	DI"A 1 OR DI"B 1
DI"C Ø OR DI"D Ø	12	DI"A Ø OR DI"B Ø
$\overline{\text{BRDS1}}$	13	THRS C+Q
-12V	14	-12V
-12V	15	-12V
+12V	16	+12V
+12V	17	+12V
	18	
	19	
	20	$\overline{\text{I/O-WR}}$
	21	
A 1	22	A Ø
A 3	23	A 2
	24	
	25	
	26	D 6
	27	
	28	
	29	
	30	
GND	31	GND
GND	32	GND

A	J2	B
GND	1	GND
GND	2	GND
NC	3	APST
	4	
	5	
	6	
Ø REC C+D	7	
	8	
ØREC A+B	9	LCLK
	10	
	11	
	12	
	13	
	14	TL Ø
	15	TL 1
	16	
	17	
	18	TQUAL
	19	TGLD
	20	$\overline{\text{TGRES}}$
	21	
	22	
	23	
	24	
	25	16/$\overline{32}$
	26	SAMPLE/$\overline{\text{LATCH}}$
	27	Ø LATCH A OR ØLATCH B
	28	
	29	Ø LATCH C OR ØLATCH D
	30	
+5V	31	+5V
+5V	32	+5V

J 3,J 4,J 5, = ALP 80 CONNECTOR

CODE	ERN	REVISIONS	DATE	NAME	CHECK	DRAWN

DOLCH LOGIC INSTRUMENTS

INPUT BOARD

PART NUMBER	SHEET
5 3250 - 03	1/1

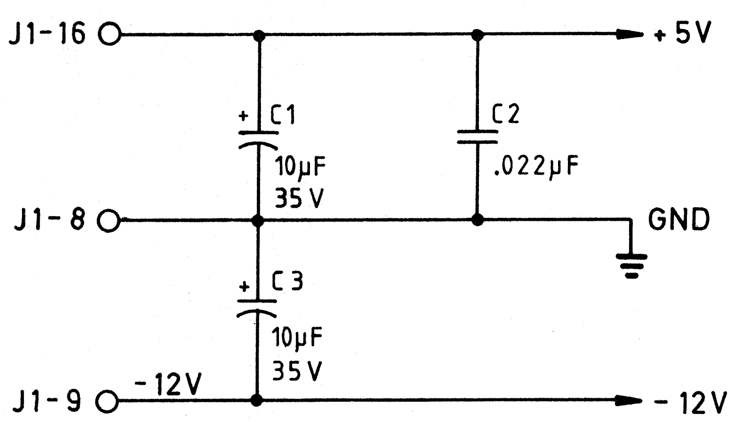

CODE	ERN	DATE		
C		8.9.80	NAME	Mü
A		6.5.80	DATE	6.5.80
REVISIONS			CHECK / DRAWN	

DOLCH LOGIC INSTRUMENTS

KEYBOARD

PART NUMBER	SHEET
5 3250-04	1 / 2

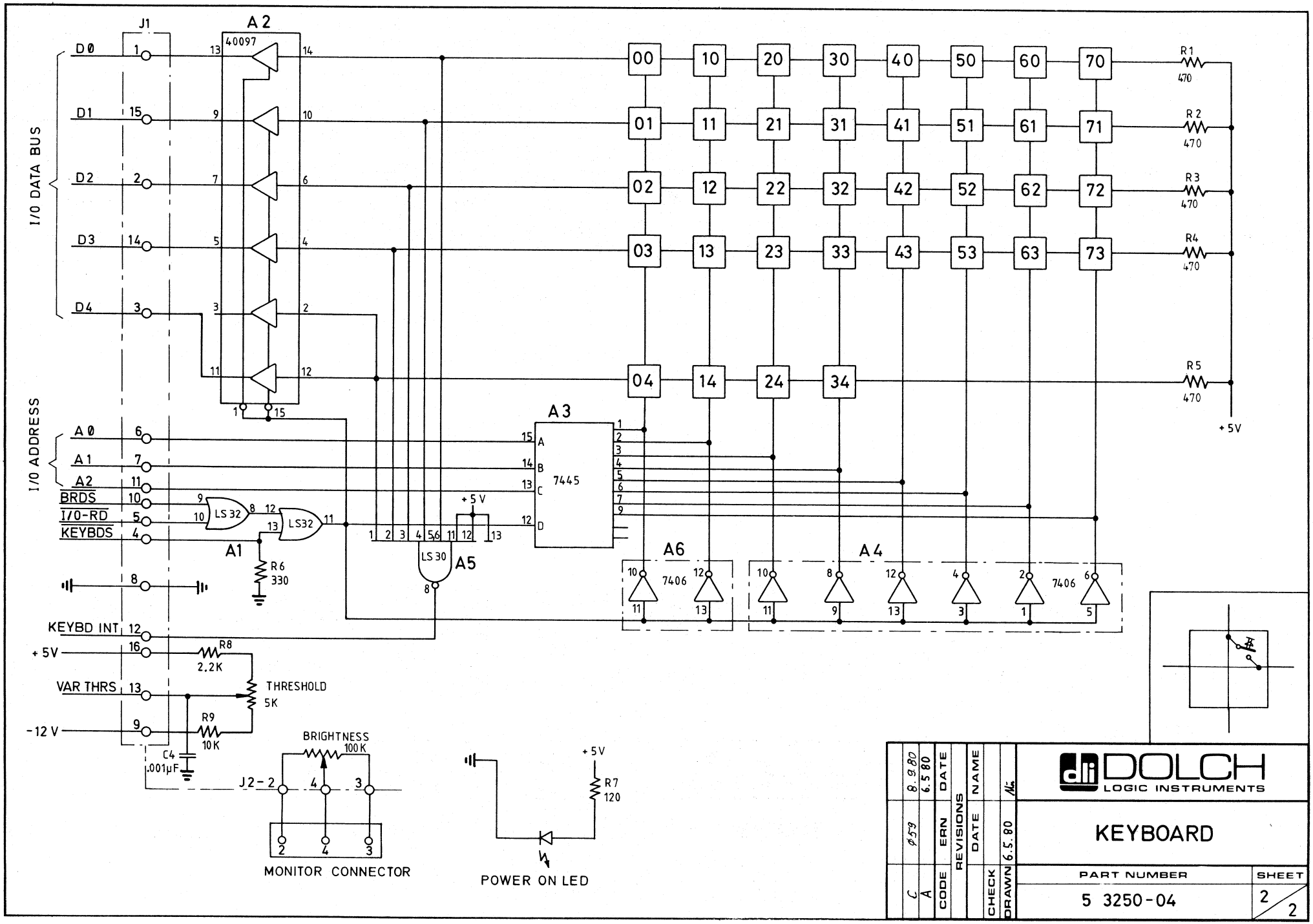
J1
A2
40097
D0
D1
D2
D3
D4
I/O DATA BUS
I/O ADDRESS
A0
A1
A2
BRDS
I/O-RD
KEYBDS
KEYBD INT
+5V
VAR THRS
-12 V
LS 32
LS32
A1
R6
330
LS 30
A5
A3
7445
A6
7406
A4
7406
R1
470
R2
470
R3
470
R4
470
R5
470
+5V
R8
2.2K
THRESHOLD
5K
R9
10K
C4
.001µF
BRIGHTNESS
100K
J2-2
MONITOR CONNECTOR
R7
120
POWER ON LED
DOLCH
LOGIC INSTRUMENTS
KEYBOARD
PART NUMBER
5 3250-04
SHEET
2/2
REVISIONS
CODE
ERN
DATE
NAME
CHECK
DRAWN
6.5.80

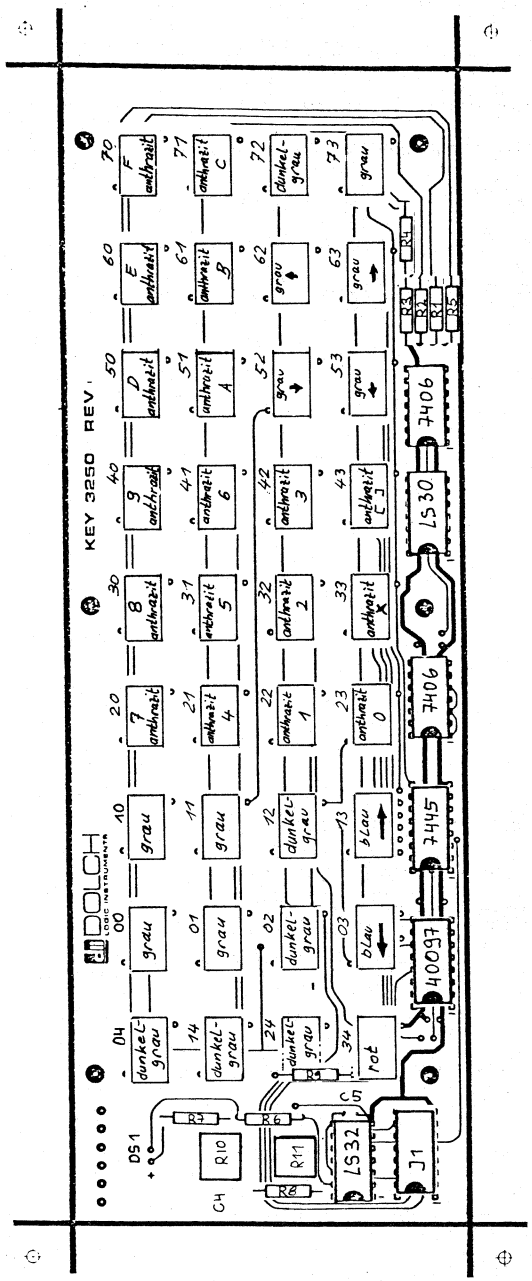

LAM 3250

POS.	ITEM	QTY
	7406	2
	LS30	1
	LS32	1
	7445	1
	LS 367/ 40097/80C97	1
R1-5	470Ω	5
R6	330Ω	1
R7	120Ω	1
R8	2K2	1
R9	10K	1
R10	TRIMMER 100K	1
R11	TRIMMER 5K	1
C4	1nF	1
	10µF Tantal 35V	1
	22nF	2
DS1	LED (gr.)	1
J1	16pol. FLACHBANDKABEL	1
	TASTEN 6450 0001 (GRAU)	5
	TASTEN 6450 0003 (DUNKELGRAU)	6
	TASTEN 6450 0005 (ANTHRAZIT) 0-9	10
	TASTEN 6450 0005 (ANTHRAZIT) A-F	6
	TASTEN 6450 005 (ANTHRAZIT) X / []	2

POS	ITEM	QTY
	TASTEN 6450 0006 (ROT)	1
	TASTEN 6450 0001 (GRAU) ↑ ↓ ← →	4
	TASTE 6450 0009 (BLAU) PFEIL (L)	1
	TASTE 6450 0009 (BLAU) PFEIL (R)	1

	Datum	Name
Bearb	4.6.81	Gehrke
Gepr		
Norm		

Zust | Änderung | Datum | Name

5-3250-041

Maßstab | LAM 3250

ASS'Y DRAWING - PART LIST

DOLCH LOGIC INSTRUMENTS GMBH

KEYBOARD

Rev.C

Blatt BI

J 3

GND	8	9	-12 V
A 1	7	10	$\overline{\text{BRDS Ø}}$
A Ø	6	11	A 2
$\overline{\text{I/O-RD}}$	5	12	KEYBD INT
$\overline{\text{KEYBDS}}$	4	13	D 5
D 4	3	14	D 3
D 2	2	15	D 1
D Ø	1	16	+5V

			DATE	REVISIONS	NAME		DOLCH LOGIC INSTRUMENTS
			ERN		DATE		KEYBOARD
			CODE		CHECK	DRAWN	PART NUMBER: 5 3250 - 04 / SHEET 1/1

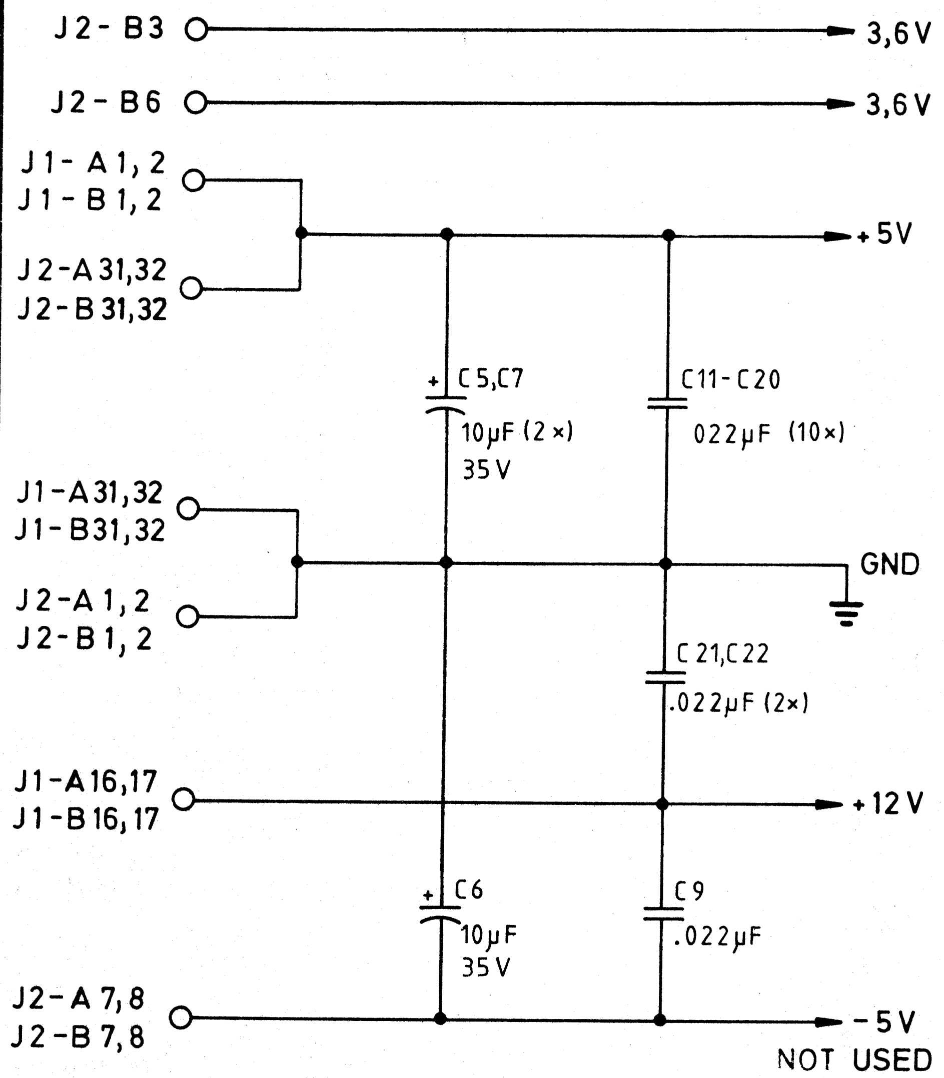

CODE	ERN	DATE
B		10.6.80
A		6.5.80

REVISIONS

	DATE	NAME
DRAWN	6.5.80	Ni.
CHECK		

DOLCH LOGIC INSTRUMENTS

CPU BOARD

PART NUMBER: 5 3250-05

SHEET 1/2

316

Bestell-Nr 643 315 80185 glam

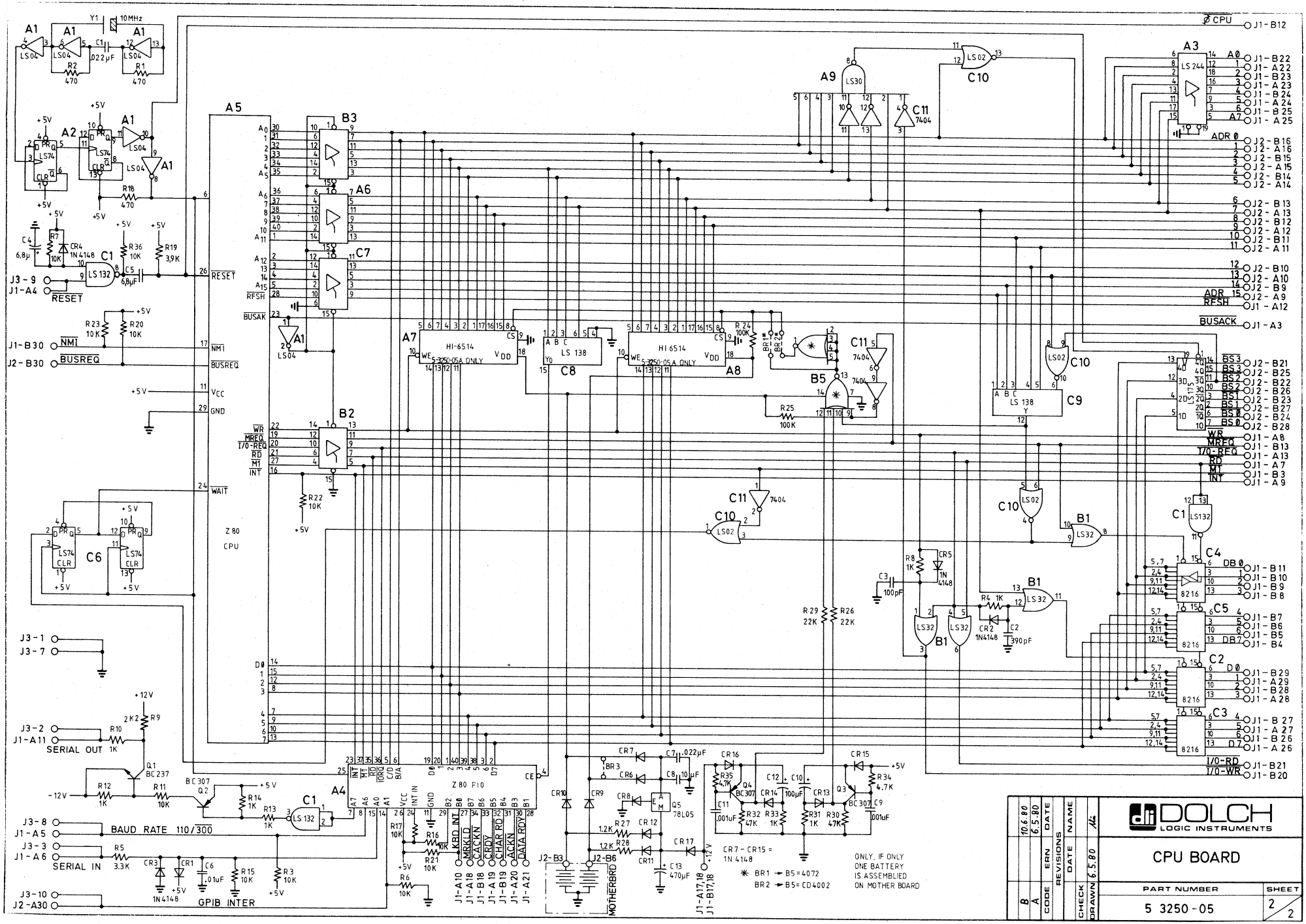
Y1 10MHz
A1 LS04
C1 .022µF
R1 470
R2 470
A2 LS74
R18 470
C4 6,8µ
R7 10K
CR4 1N4148
C1 LS 132
R36 10K
R19 3,9K
C5 6,8µF
J3-9
J1-A4
RESET
R23 10K
R20 10K
J1-B30 NMI
J2-B30 BUSREQ
A5
Z 80 CPU
B3
A6
C7
B2
A7 HI-6514
A8 HI 6514
C8 LS 138
A9 LS30
C10 LS02
C11 7404
A3 LS 244
C9 LS 138
B5
R25 100K
R24 100K
BR1
BR2
R22 10K
C6 LS74
J3-1
J3-7
J3-2
J1-A11
SERIAL OUT
R10 1K
R9 2K2
Q1 BC 237
Q2 BC 307
R12 1K
R11 10K
R14 1K
R13 1K
C1 LS 132
J3-8
J1-A5
BAUD RATE 110/300
J3-3
J1-A6
SERIAL IN
R5 3.3K
CR3 1N4148
CR1
C6 .01uF
R15 10K
R3 10K
J3-10
J2-A30
GPIB INTER
R17 10K
R16 10K
R21 10K
R6 10K
J1-A10 KBD INT
J1-A18 MRKLD
J1-B18 ACKN
J1-A19 RDY
J1-B19 CHAR RD
J1-A20 ACKN
J1-A21 DATA RDY
J2-B3
J2-B6
MOTHERBRD
CR7
CR6
C7 .022µF
C8 10µF
CR8
CR9
CR10
Q5 78L05
R27 1.2K
R28 1.2K
CR12
CR11
CR17
C13 470µF
J1-A17,18
J1-B17,18
CR16
R35 4.7K
Q4 BC307
C11 .001uF
R32 47K
CR14
R33 1K
C12 100µF
C10
CR13
R31 1K
R30 47K
Q3 BC 307
C9 .001uF
CR15
R34 4.7K
CR7 - CR15 = 1N 4148
BR1 → B5 = 4072
BR2 → B5 = CD4002
ONLY, IF ONLY ONE BATTERY IS ASSEMBLIED ON MOTHER BOARD
R29 22K
R26 22K
R8 1K
CR5 1N 4148
C3 100pF
R4 1K
CR2 1N4148
C2 390pF
B1 LS32
C1 LS132
C4 8216
C5 8216
C2 8216
C3 8216
J1-B12 CPU
J1-B22 A0
J1-A22
J1-B23
J1-A23
J1-B24
J1-A24
J1-B25
J1-A25 A7
J2-B16 ADR 0
J2-A16
J2-B15
J2-A15
J2-B14
J2-A14
J2-B13
J2-A13
J2-B12
J2-A12
J2-B11
J2-A11
J2-B10
J2-A10
J2-B9 ADR
J2-A9 RFSH
J1-A12
J1-A3 BUSACK
J2-B21 BS3
J2-B25 BS3
J2-B22 BS2
J2-B26 BS2
J2-B23 BS1
J2-B27 BS1
J2-B24 BS0
J2-B28 BS0
J1-A8 WR
J1-B13 MREQ
J1-A13 I/O-REQ
J1-A7 RD
J1-A3 M1
J1-A9 INT
J1-B11 DB0
J1-B10
J1-B9
J1-B8
J1-B7
J1-B6
J1-B5
J1-B4 DB7
J1-B29 D0
J1-A29
J1-B28
J1-A28
J1-B27
J1-A27
J1-B26
J1-A26 D7
J1-B21 I/O-RD
J1-B20 I/O-WR
DOLCH LOGIC INSTRUMENTS
CPU BOARD
PART NUMBER 5 3250-05
SHEET 2/2
CODE B A
ERN 10.6.80 6.5.80
DATE
REVISIONS
NAME
DATE
CHECK
DRAWN 6.5.80

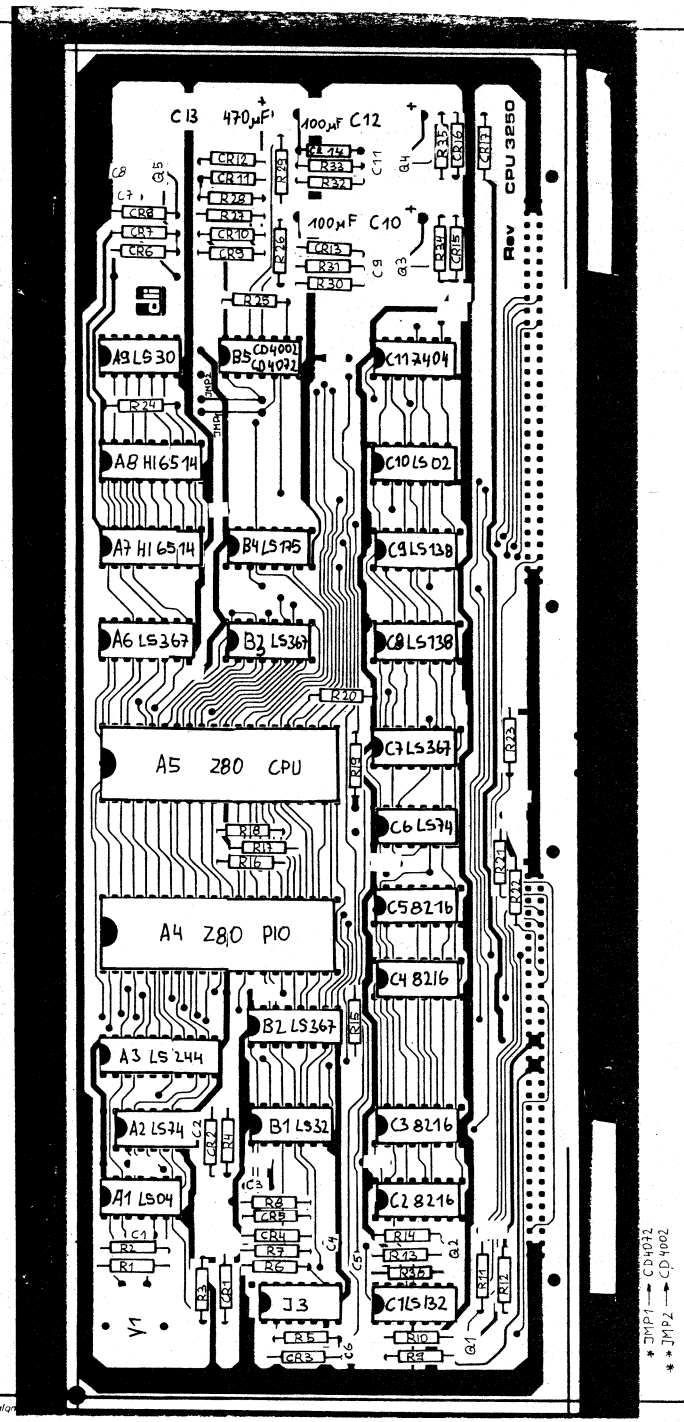

LAM 3250

POS.	ITEM	QTY
	LS 04	1
	LS 30	1
	LS 32	1
	LS 74	2
	LS 132	1
	LS 02	1
	LS 138	2
	LS 175	1
	LS 367	4
	HI 8216	4
	LS 244	1
	7404	1
	HI 6514	2
	CD4002 / CD4072	1
	Z80 CPU	1
	Z80 PIO	1
R1, 2, 18	470Ω	3
R 4,10,12, 13,14,8, 31, 33	1K	8
R 27,28	1K2	2
R9	2K2	1
R19	3K9	1
R5	3K3	1
R 34,35	4K7	2
R 37,11, 15,16,19, 20,21,22, 23,36	10K	12
R 24, 25	100K	2
R 30, 32	47K	2

POS	ITEM	QTY
R26, 29	22K	2
Q5	78L05	1
Y1	10MHz (Crystal)	1
	22nF	11
C 3	100pF	1
C2	390pF	1
C4,5	6,8µF	2
C1,7	22nF	2
C 8	6,8µF/10µF / 35V	1
C9,11	1nF	2
C10,12	100µF / 16V	2
C13	470µF / 40V-16V	1
C6	10nF	1
	6,8µF	7
	1N 4148	17
Q 2,3,4	BC 307	3
Q1	BC 237	1
	14P Socket	9
	16p. Precision Socket	1
	16 P Socket	11
	18 P Socket 2x / 20P Socket 1x	
	40P Socket (Precision)	2

Maßstab LAM 4850

ASS'Y DRAWING - PART LIST

	Datum	Name
Bearb	23.7. 80	Gehrke
Gepr		
Norm		

DOLCH LOGIC INSTRUMENTS GMBH

5 3250-05 A

CPU

Rev. B

Blatt B

Zust	Änderung	Datum	Name

Bestell-Nr 643337 80/85 glan

J1

A	J1	B
+5V	1	+5V
+5V	2	+5V
BUSACK	3	M 1
RESET	4	DB 7
BAUDE RATE	5	DB 6
SERIAL IN	6	DB 5
RD	7	DB 4
WR	8	DB 3
INT	9	DB 2
KEYBD INT	10	DB 1
SERIAL OUT	11	DB Ø
RFSH	12	Ø
I/O-REQ	13	MREQ
-12V	14	-12V
-12V	15	-12V
+12V	16	+12V
+12V	17	+12V
C7=MRKLD	18	C6=CACKN
C5=CRDY	19	C4=CHAR RD
C3=ACKN	20	C2=I/O-WR
C1=DATA RDY	21	CØ=I/O-RD
A 1	22	A Ø
A 3	23	A 2
A 5	24	A 4
A 7	25	A 6
D 7	26	D 6
D 5	27	D 4
D 3	28	D 2
D 1	29	D Ø
	30	NMI
GND	31	GND
GND	32	GND

J2

A	J2	B
GND	1	GND
GND	2	GND
	3	BATTERY 1 +3,6V
	4	
	5	
	6	BATTERY 2 +3,6V
-5V	7	-5V
-5V	8	-5V
ADR 15	9	ADR 14
ADR 13	10	ADR 12
ADR 11	11	ADR 10
ADR 9	12	ADR 8
ADR 7	13	ADR 6
ADR 5	14	ADR 4
ADR 3	15	ADR 2
ADR 1	16	ADR Ø
	17	
	18	
	19	
	20	
	21	BS 3
	22	BS 2
	23	BS 1
	24	BS Ø
	25	BS 3
	26	BS 2
	27	BS 1
	28	BS Ø
	29	
GPIB INTER	30	BUSREQ
+5V	31	+5V
+5V	32	+5V

CODE	ERN	DATE

REVISIONS: DATE | NAME — CHECK — DRAWN

DOLCH LOGIC INSTRUMENTS

CPU BOARD

PART NUMBER: 5 3250 - 05

SHEET: 1/2

J 3

BAUD RATE 110/300	8	9	$\overline{\text{RESET}}$
GND	7	10	GPIB INTER
	6	11	
	5	12	
	4	13	
SERIAL IN	3	14	
SERIAL OUT	2	15	
GND	1	16	

CODE	ERN	DATE	REVISIONS	DATE	NAME	CHECK	DRAWN

DOLCH LOGIC INSTRUMENTS

CPU BOARD

PART NUMBER	SHEET
5 3250 - 05	2/2

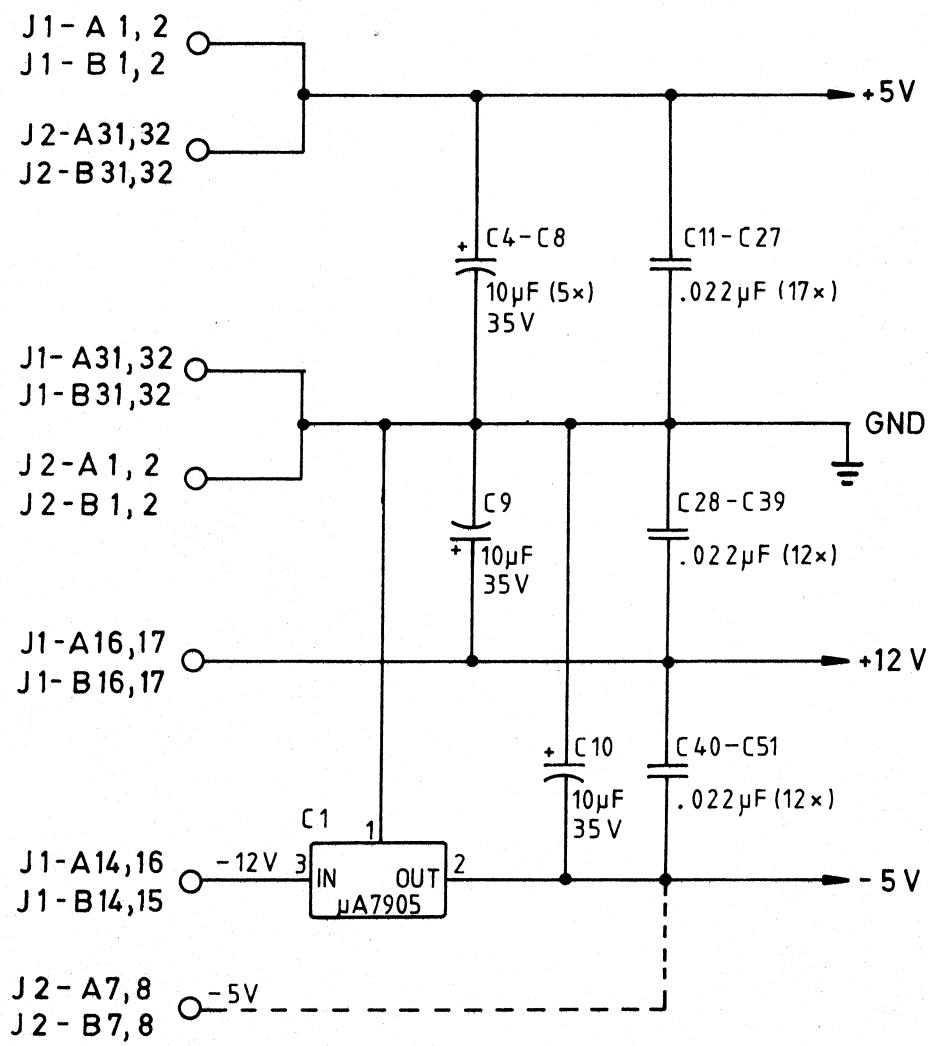

	6.5.80	DATE	NAME	DOLCH LOGIC INSTRUMENTS	
		ERN	DATE 6.5.80	MEMORY BOARD 1	
A		CODE	REVISIONS	PART NUMBER	SHEET
			CHECK / DRAWN	5 3250-06	1/2

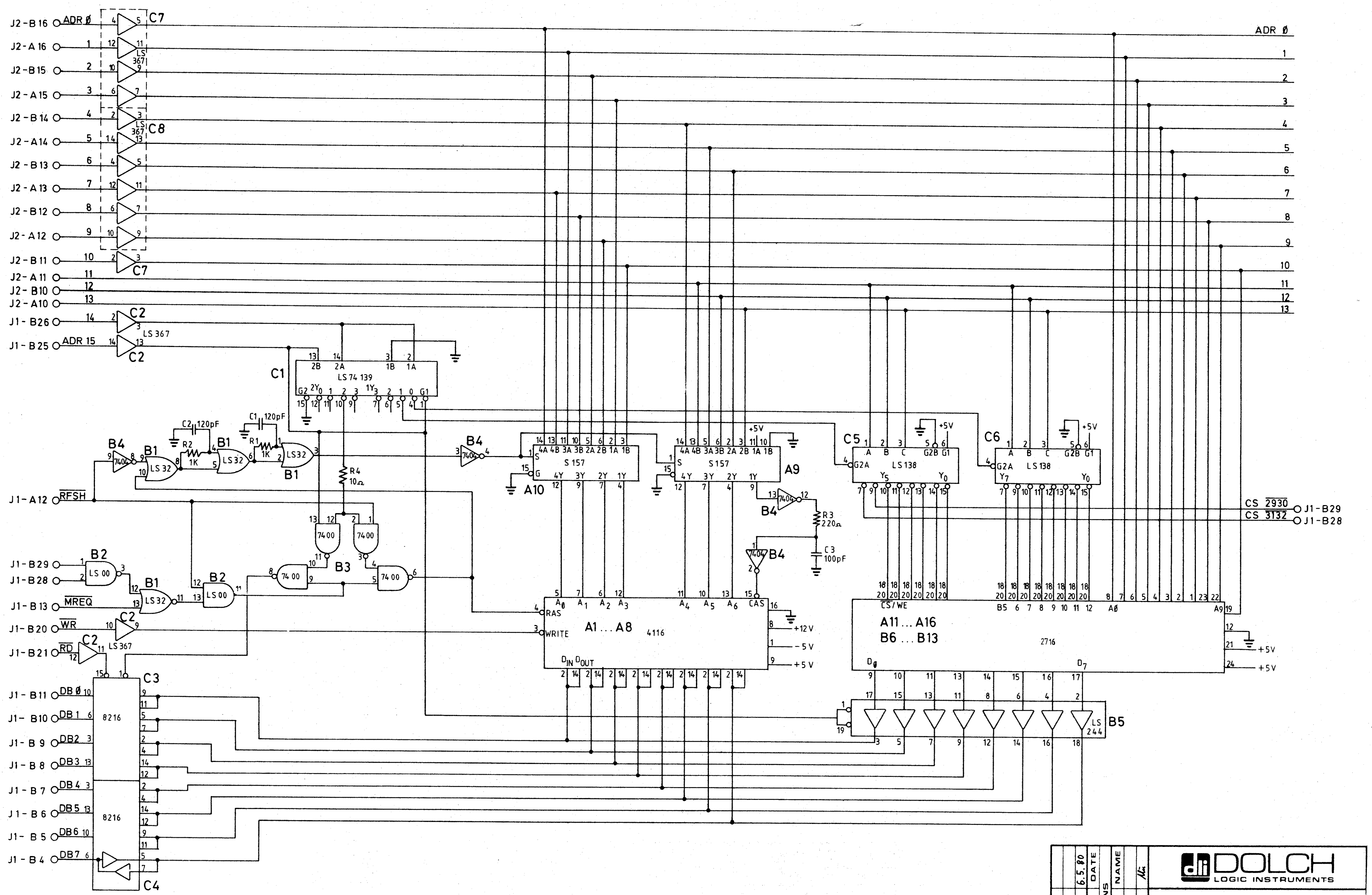

A		6.5.80	
CODE	ERN	DATE	
REVISIONS			
	DATE	NAME	
CHECK	6.5.80		
DRAWN			

DOLCH LOGIC INSTRUMENTS

MEMORY BOARD 1

PART NUMBER: 5 3250-06

SHEET 2/2

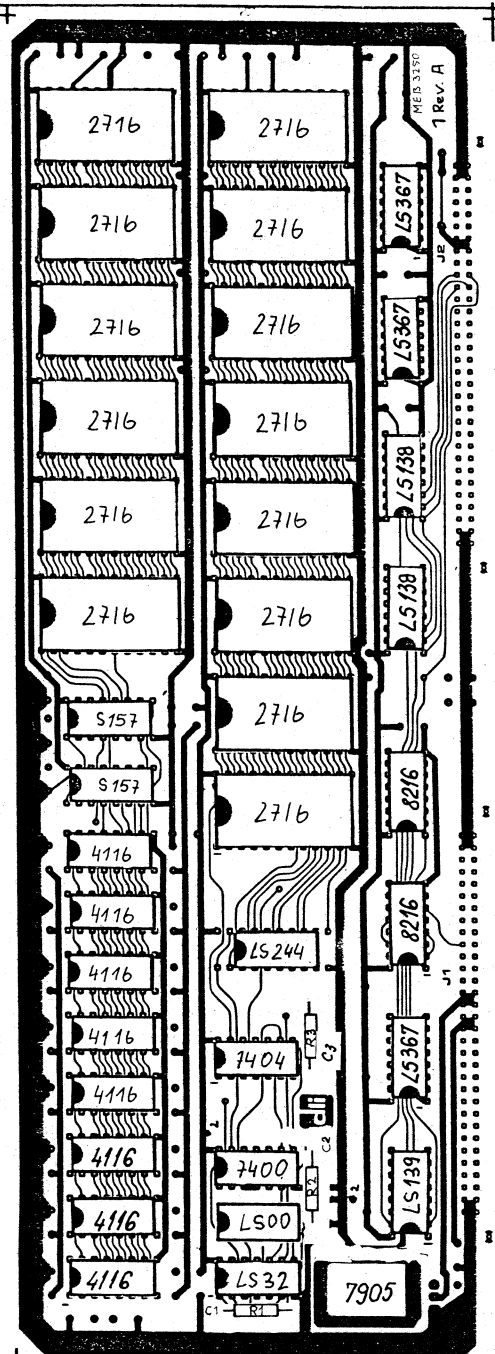

POS.	ITEM	QTY
	7400	1
	7404	1
	LS 32	1
	LS 00	1
	LS 139	1
	S 157	2
	LS 244	1
	LS 367	3
	LS 138	2
	8216	2
	4116	8
	2716	14
	7905 Voltage Regulator	1
$R_{1,2}$	1K	2
R_3	220 Ω	1
$C_{1,2}$	120 p	2
C_3	100 p	1
	10 µF / 35 V	8
	22 n	38

POS	ITEM	QTY
	16P Sockel	18
	14P Sockel	4
	20P Sockel	1
	24P Sockel	14

Maßstab LAM 3250

ASS'Y DRAWING - PART LIST

	Datum	Name
Bearb	30.7.80	Gehrke
Gepr	11.9.80	Claus
Norm		

DOLCH LOGIC INSTRUMENTS GMBH

5 3250 - 06

MEB 1 3250 A

Blatt BI

Zust. Änderung Datum Name

J1

A	Pin	B
+5V	1	+5V
+5V	2	+5V
	3	
	4	DB 7
	5	DB 6
	6	DB 5
	7	DB 4
	8	DB 3
	9	DB 2
	10	DB 1
	11	DB Ø
$\overline{RFSH}$	12	Ø
	13	$\overline{MREQ}$
-12V	14	-12V
-12V	15	-12V
+12V	16	+12V
+12V	17	+12V
	18	
	19	
	20	$\overline{WR}$
	21	
	22	$\overline{RD}$
	23	
	24	
	25	ADR 15
	26	ADR 14
	27	
	28	$\overline{CS\ 3132}$
	29	$\overline{CS\ 2930}$
	30	
GND	31	GND
GND	32	GND

J2

A	Pin	B
GND	1	GND
GND	2	GND
	3	
	4	
	5	
	6	
-5V	7	-5V
-5V	8	-5V
	9	
ADR 13	10	ADR 12
ADR 11	11	ADR 10
ADR 9	12	ADR 8
ADR 7	13	ADR 6
ADR 5	14	ADR 4
ADR 3	15	ADR 2
ADR 1	16	ADR Ø
	17	
	18	
	19	
	20	
	21	
	22	
	23	
	24	
	25	
	26	
	27	
	28	
	29	
	30	
+5V	31	+5V
+5V	32	+5V

CODE	ERN	DATE	REVISIONS	DATE	NAME

CHECK | DRAWN

DOLCH LOGIC INSTRUMENTS

MEMORY BOARD 1

PART NUMBER	SHEET
5 3250 - 06	1/1

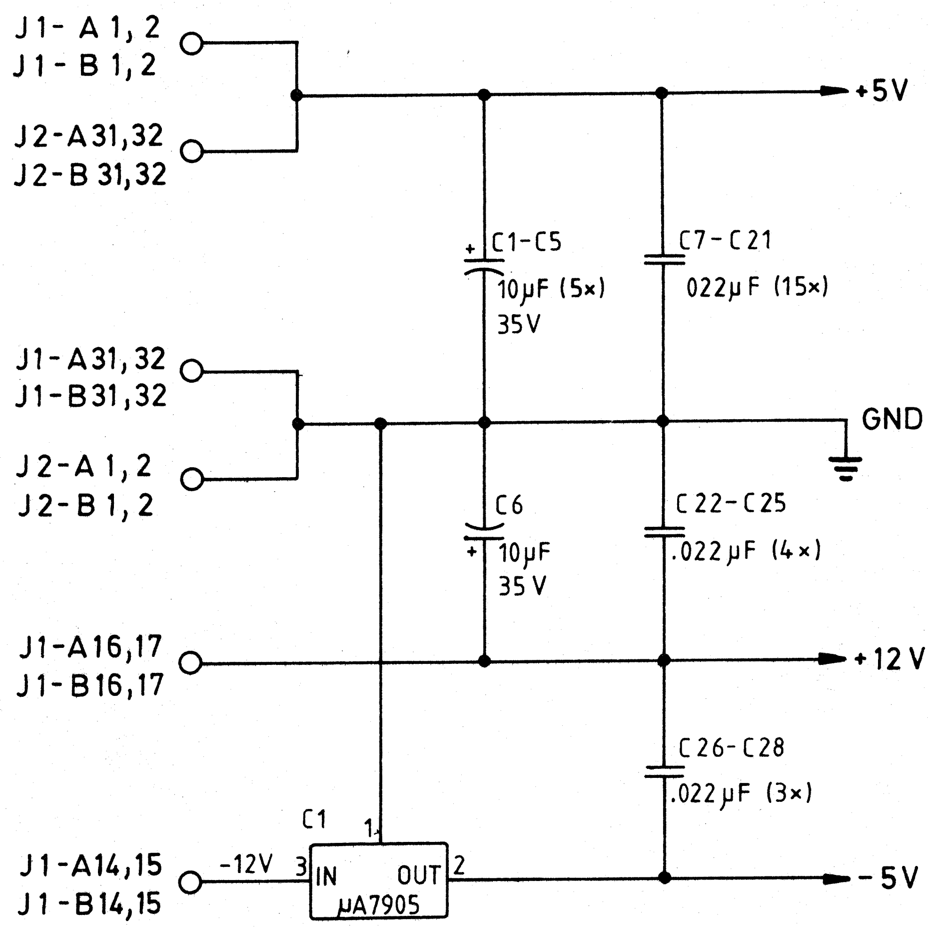

A	6.5.80			
CODE	DATE	ERN		
REVISIONS				
DRAWN			NAME	
CHECK	6.5.80		DATE	

DOLCH LOGIC INSTRUMENTS

MEMORY BOARD 2

PART NUMBER	SHEET
5 3250-07	1/2

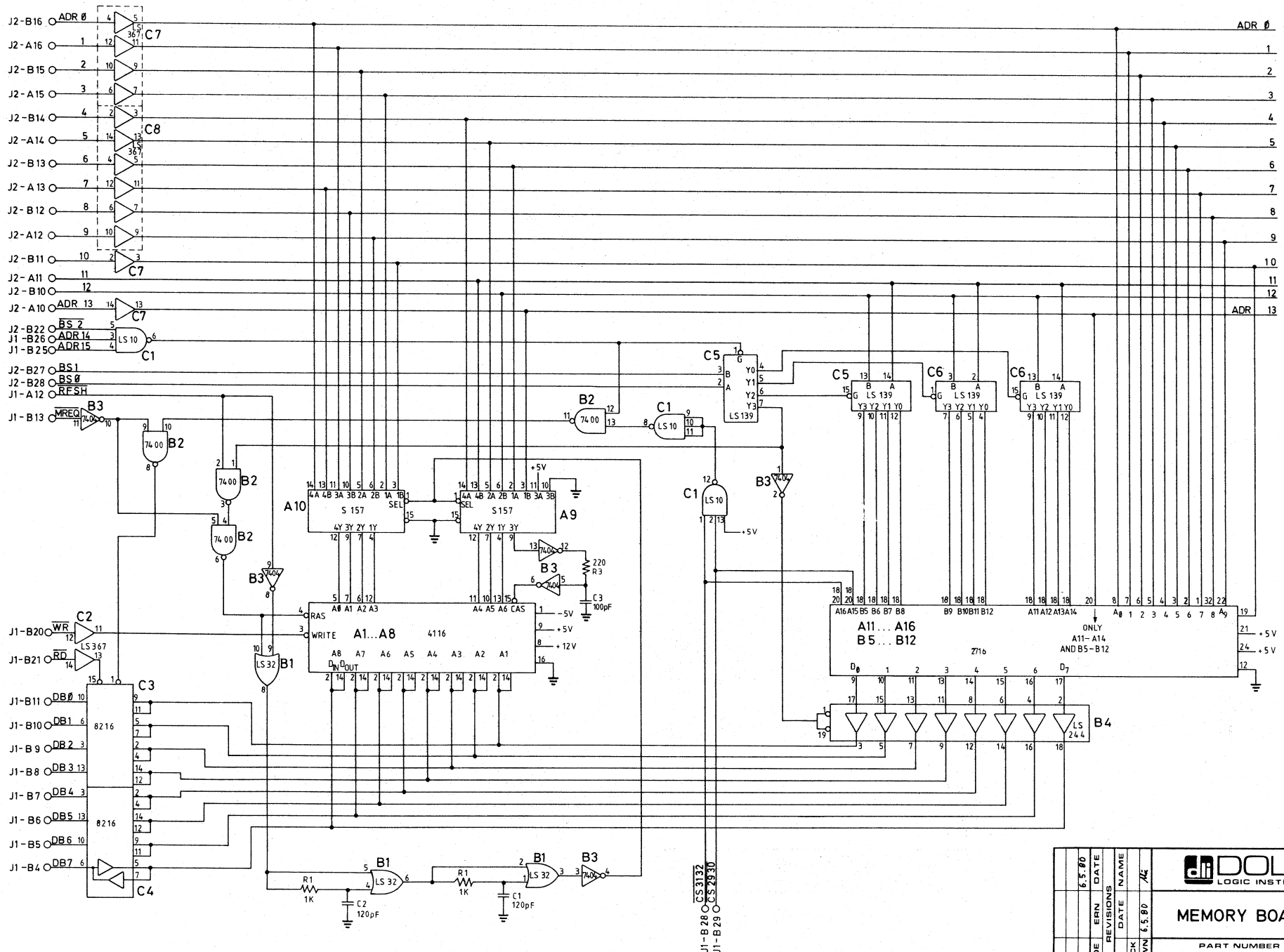
J2-B16
J2-A16
J2-B15
J2-A15
J2-B14
J2-A14
J2-B13
J2-A13
J2-B12
J2-A12
J2-B11
J2-A11
J2-B10
J2-A10
J2-B22
J1-B26
J1-B25
J2-B27
J2-B28
J1-A12
J1-B13
J1-B20
J1-B21
J1-B11
J1-B10
J1-B9
J1-B8
J1-B7
J1-B6
J1-B5
J1-B4
J1-B28
J1-B29
ADR Ø
ADR 13
BS 2
ADR 14
ADR 15
BS1
BSØ
RFSH
MREQ
WR
RD
DBØ
DB1
DB2
DB3
DB4
DB5
DB6
DB7
CS 3132
CS 2930
C7
C8
C1
C2
C3
C4
C5
C6
B1
B2
B3
B4
A10
A9
A1...A8
A11...A16
B5...B12
S 157
4116
2716
8216
LS 139
LS 244
LS 32
LS 10
74 00
74 04
LS 367
ONLY
A11-A14
AND B5-B12
+5V
+12V
-5V
220
R3
C3
100pF
R1
1K
C2
120pF
C1
120pF
DOLCH
LOGIC INSTRUMENTS
MEMORY BOARD 2
PART NUMBER
5 3250-07
SHEET
2/2
CODE
A
ERN
REVISIONS
DATE
NAME
CHECK
DRAWN
6.5.80

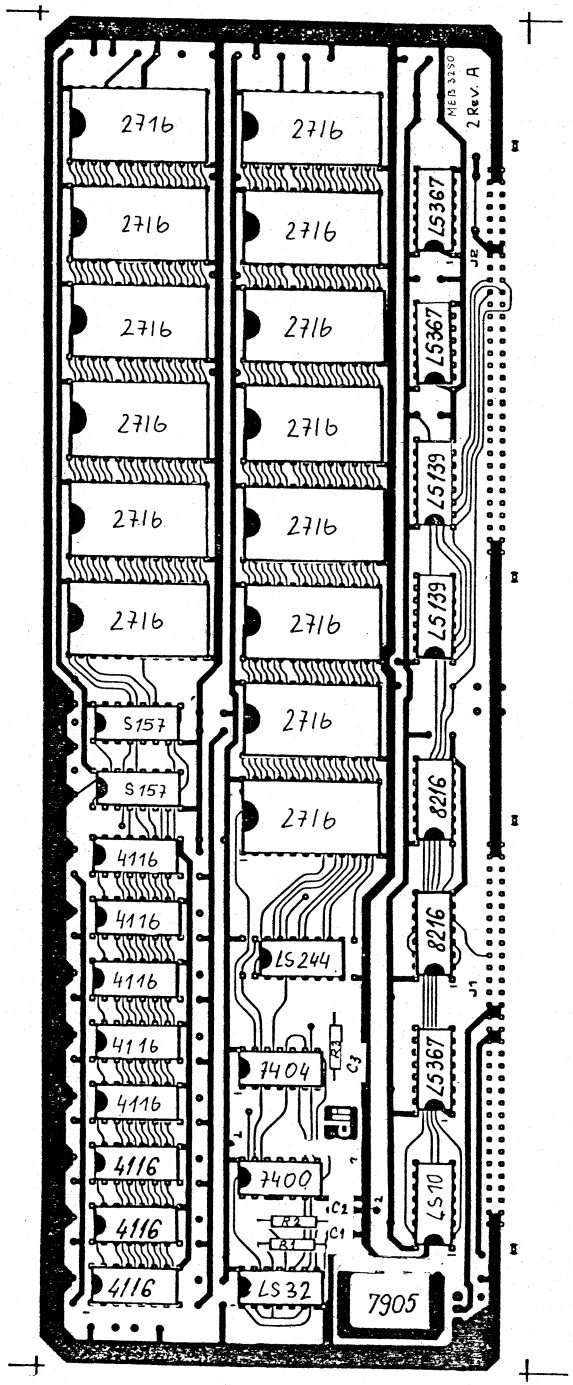

POS.	ITEM	QTY	POS	ITEM	QTY
	7400	1			
	7404	1		16P Sockel	17
	LS 32	1		14P Sockel	4
	LS 10	1		20P Sockel	1
	LS 139	2		24P Sockel	14
	S 157	2			
	LS 244	1			
	LS 367	3			
	8216	2			
	4116	8			
	2716	14			
	7905 Voltage Regulator	1			
$R_{1,2}$	1K	2			
R_3	220 Ω	1			
$C_{1,2}$	120 p	2			
C_3	100 p	1			
	10 µF / 35 V	8			
	22 n	40			

	Datum	Name
Bearb	28.07.80	Gehrke
Gepr		
Norm		

Zust | Änderung | Datum | Name

Maßstab LAM 3250

ASS'Y DRAWING - PART LIST

DOLCH LOGIC INSTRUMENTS GMBH

5 3250-07

MEB 2 3250 A

Blatt 8

A	J1	B
+5V	1	+5V
+5V	2	+5V
	3	
	4	DB 7
	5	DB 6
	6	DB 5
	7	DB 4
	8	DB 3
	9	DB 2
	10	DB 1
	11	DB Ø
$\overline{\text{RFSH}}$	12	Ø
	13	$\overline{\text{MREQ}}$
-12V	14	-12V
-12V	15	-12V
+12V	16	+12V
+12V	17	+12V
	18	
	19	
	20	$\overline{\text{WR}}$
	21	$\overline{\text{RD}}$
	22	
	23	
	24	
	25	ADR 15
	26	ADR 14
	27	
	28	$\overline{\text{CS 3132}}$
	29	$\overline{\text{CS 2930}}$
	30	
GND	31	GND
GND	32	GND

A	J2	B
GND	1	GND
GND	2	GND
	3	
	4	
	5	
	6	
-5V	7	-5V
-5V	8	-5V
	9	
ADR 13	10	ADR 12
ADR 11	11	ADR 10
ADR 9	12	ADR 8
ADR 7	13	ADR 6
ADR 5	14	ADR 4
ADR 3	15	ADR 2
ADR 1	16	ADR Ø
	17	
	18	
	19	
	20	
	21	
	22	$\overline{\text{BS 2}}$
	23	
	24	
	25	
	26	
	27	BS 1
	28	BS Ø
	29	
	30	
+5V	31	+5V
+5V	32	+5V

CODE	ERN	DATE	REVISIONS	DATE	NAME	CHECK	DRAWN

DOLCH LOGIC INSTRUMENTS

MEMORY BOARD 2

PART NUMBER	SHEET
5 3250 - 07	1/1

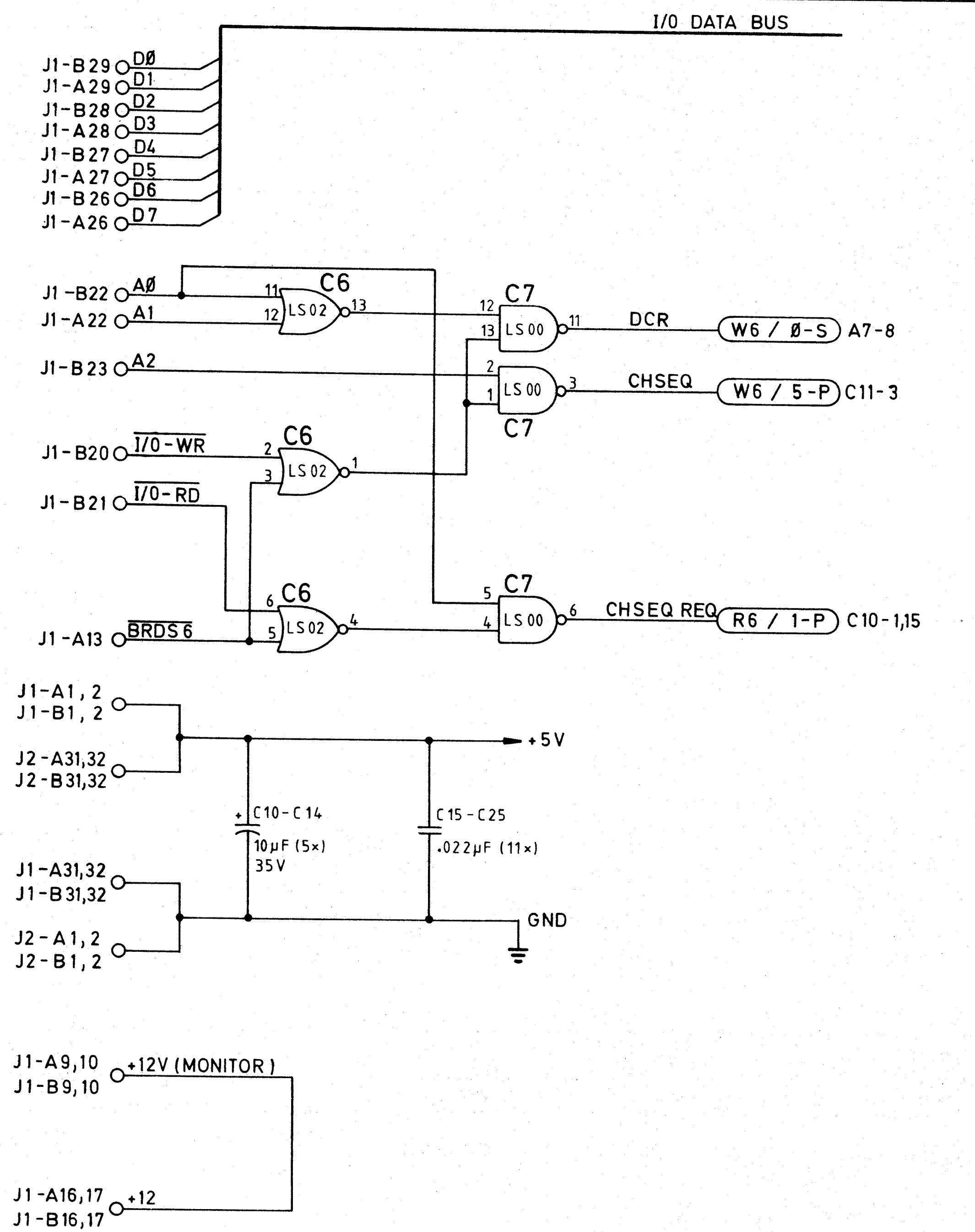

CODE	ERN	DATE
I		24.10.81
H		10.6.80
G		6.5.80

REVISIONS

	DATE	NAME
CHECK		
DRAWN	6.5.80	[signature]

DOLCH LOGIC INSTRUMENTS

RASTER COUNTER

PART NUMBER: 5 4850-03

SHEET 1/2

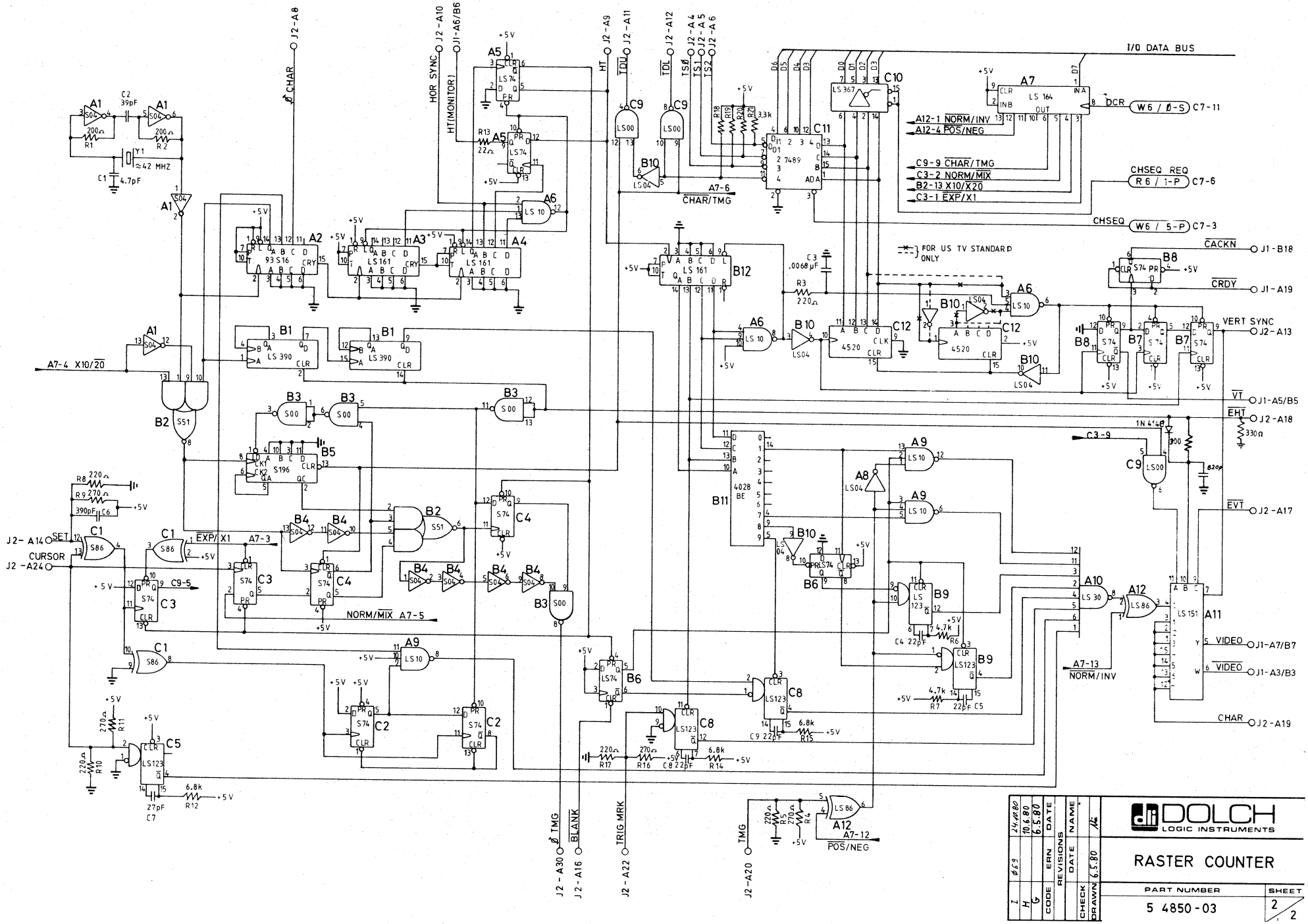
I/O DATA BUS
Ø CHAR
HOR SYNC
HT(MONITOR)
HT
TDU
TDL
TS0
TS1
TS2
A12-1 NORM/INV
A12-4 POS/NEG
C9-9 CHAR/TMG
C3-2 NORM/MIX
B2-13 X10/X20
C3-1 EXP/X1
DCR
W6 / Ø-S
CHSEQ REQ
R6 / 1-P
CHSEQ
W6 / 5-P
FOR US TV STANDARD ONLY
CACKN
CRDY
VERT SYNC
VT
EHT
EVT
VIDEO
CHAR
A7-4 X10/20
EXP/X1
A7-3
NORM/MIX A7-5
A7-6
CHAR/TMG
A7-13
NORM/INV
A7-12
POS/NEG
C3-9
J2-A14
SET
CURSOR
J2-A24
J2-A30
Ø TMG
J2-A16
BLANK
J2-A22
TRIG MRK
J2-A20
TMG
DOLCH
LOGIC INSTRUMENTS
RASTER COUNTER
PART NUMBER
5 4850-03
SHEET
2/2
REVISIONS
DATE
NAME
CHECK
DRAWN

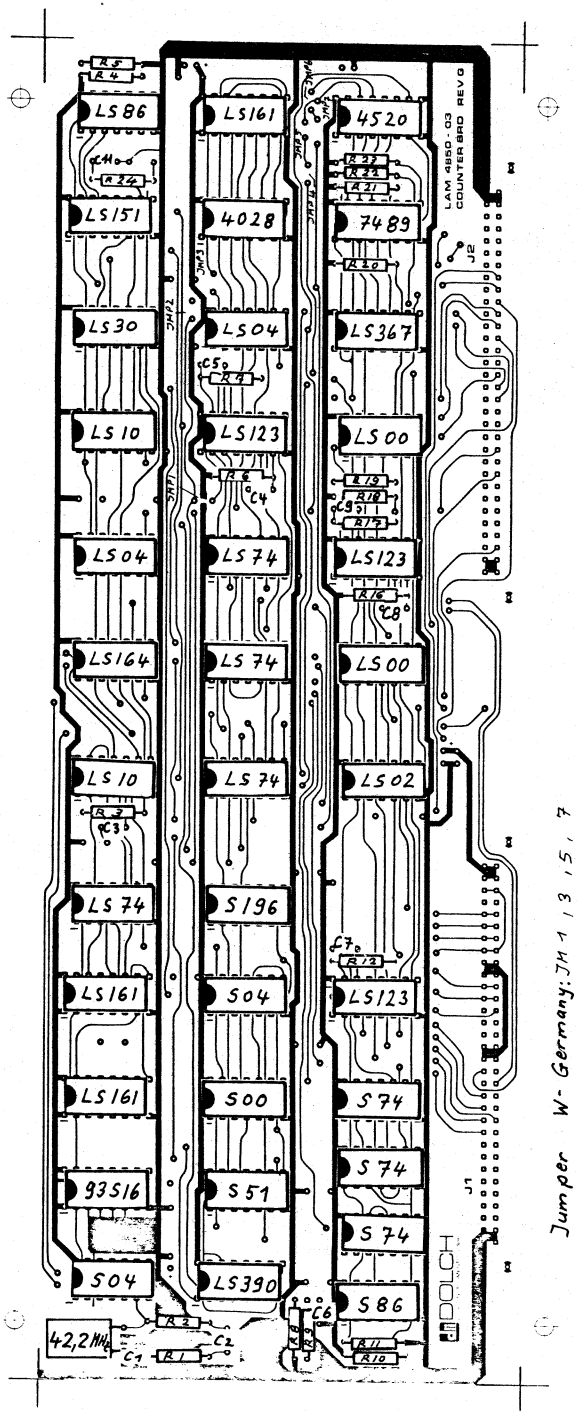

Jumper W-Germany: JM 1, 3, 5, 7
USA: JM 2, 4, 6

POS.	ITEM	QTY.	POS.	ITEM	QTY.
	LS 00	2	R1,2	200 Ω	2
	S 00	1	R24	300 Ω	1
	LS 04	2	R3,8,5,10,19	220 Ω	5
	S 04	2	R4,18,9,11	270 Ω	4
	LS 02	1	R6,7	4K7	2
	LS 10	2	R12,16,17	6K8	3
	LS 30	1	R20,21,22,23	3K3	4
	S 51	1	*	330 Ω	1
	LS 74	4			
	S 74	3			
	LS 86	1	C1	4p7	1
	S 86	1	C2	39p	1
	LS 123	3	C3	10n	1
	LS 151	1	C4,5,8,9	22p	4
	LS 161 / LS 163	3	C6	390p	1
	93S16 / S 163	1	C7	27p	1
	LS 164	1	C11	820p	1
	S 196	1			
	LS 367	1			
	LS 390 (nur Texas IC's verwenden)	1			
	7489	1		10µF/35V	5
	4520	1		22n	13
	4028	1			
				14p Sockel	23
	Quartz 42,2 MHz	1		16p Sockel	13
*	IN4148				

* auf der Platine noch nicht vorgesehen

CODE	ERN	DATE	NAME
	REVISIONS	DATE	
		CHECK	
		DRAWN	30.11.80 Gehrke

DOLCH LOGIC INSTRUMENTS

ASS'Y DRAWING - PART LIST
COUNTER BOARD I

PART NUMBER: 5 4850 - 03

SHEET 1/1

J1

A	Pin	B
+5 V	1	+5 V
+5 V	2	+5 V
$\overline{\text{VIDEO}}$	3	$\overline{\text{VIDEO}}$
	4	
$\overline{\text{VT}}$	5	$\overline{\text{VT}}$
HT (MONITOR)	6	$\overline{\text{HT (MONITOR)}}$
VIDEO	7	VIDEO
$\overline{\text{VIDEO}}$	8	$\overline{\text{VIDEO}}$
+12 V (MONITOR)	9	+12 V (MONITOR)
+12 V (MONITOR)	10	+12 V (MONITOR)
VT	11	VT
	12	
$\overline{\text{BRDS 6}}$	13	N/C
-12 V	14	-12 V
-12 V	15	-12 V
+12 V	16	+12 V
+12 V	17	+12 V
C7 = $\overline{\text{MRKLD}}$	18	C6 = $\overline{\text{CACKN}}$
C5 = $\overline{\text{CRDY}}$	19	C4 = $\overline{\text{CHAR RD}}$
C3 = $\overline{\text{ACKN}}$	20	C2 = $\overline{\text{I/O-WR}}$
C1 = DATA RDY	21	CØ = $\overline{\text{I/O-RD}}$
A1	22	AØ
A3	23	A2
A5	24	A4
A7	25	A6
D7	26	D6
D5	27	D4
D3	28	D2
D1	29	DØ
	30	
GND	31	GND
GND	32	GND

J2

A	Pin	B
GND	1	GND
GND	2	GND
	3	
TSØ	4	
TS1	5	
TS2	6	
	7	
ØCHAR	8	
HT	9	
HOR SYNC	10	
$\overline{\text{TDU}}$	11	
$\overline{\text{TDL}}$	12	
VERT SYNC	13	
SET	14	
	15	
$\overline{\text{BLANK}}$	16	
$\overline{\text{EVT}}$	17	
$\overline{\text{EHT}}$	18	
CHAR	19	
TMG	20	
	21	
TRIG MRK	22	
	23	
CURSOR	24	
	25	
	26	
	27	
	28	
	29	
ØTMG	30	
+5 V	31	+5 V
+5 V	32	+5 V

CODE	ERN	DATE	REVISIONS	DATE	NAME	CHECK	DRAWN

DOLCH LOGIC INSTRUMENTS

RASTER COUNTER BOARD

PART NUMBER	SHEET
5 4850 - 03	1/1

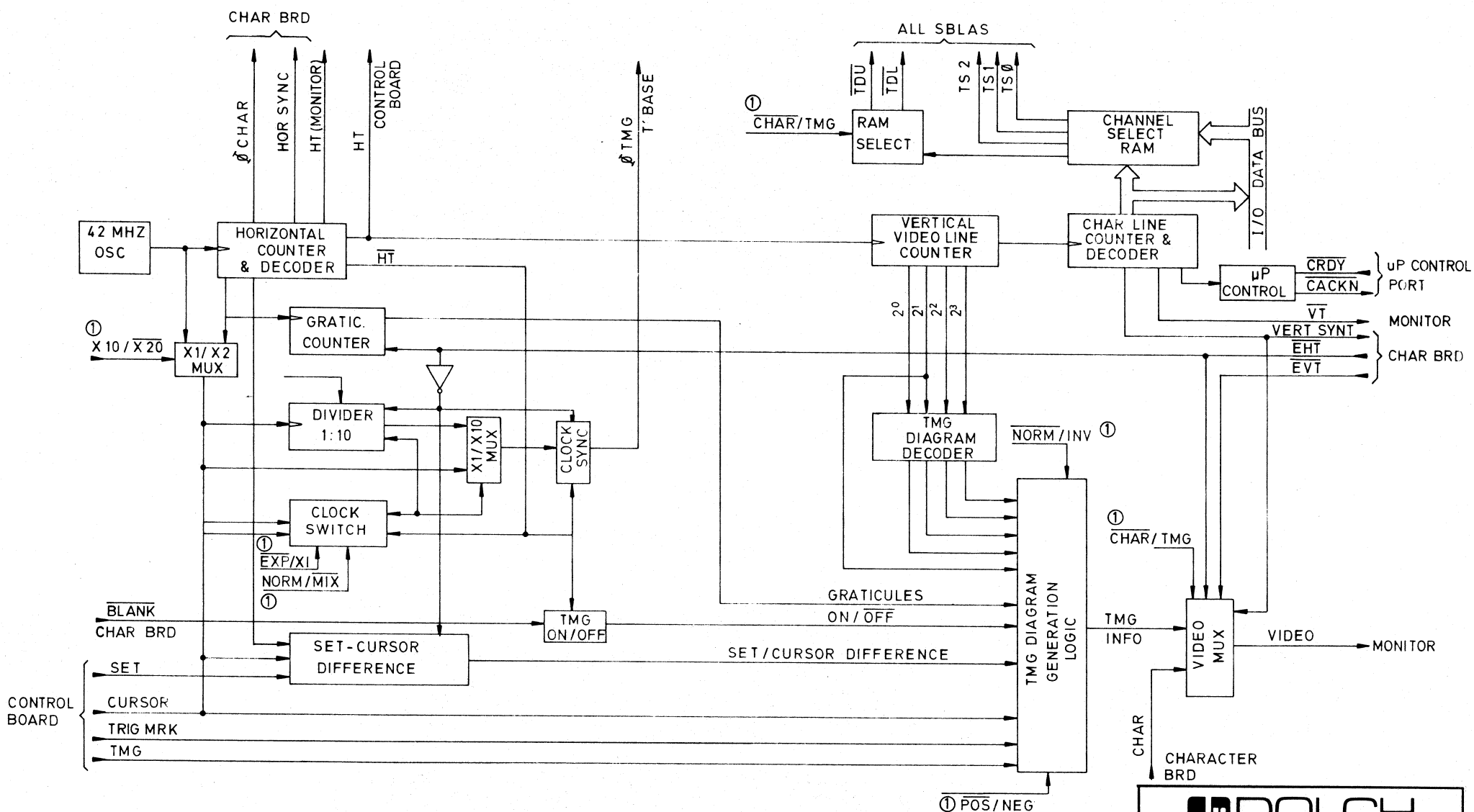

NOTES: ① FROM DCR (= DISPLAY CONTROL REGISTER)

DOLCH LOGIC INSTRUMENTS

RASTER COUNTER

PART NUMBER	SHEET
5 4850-03	1/1

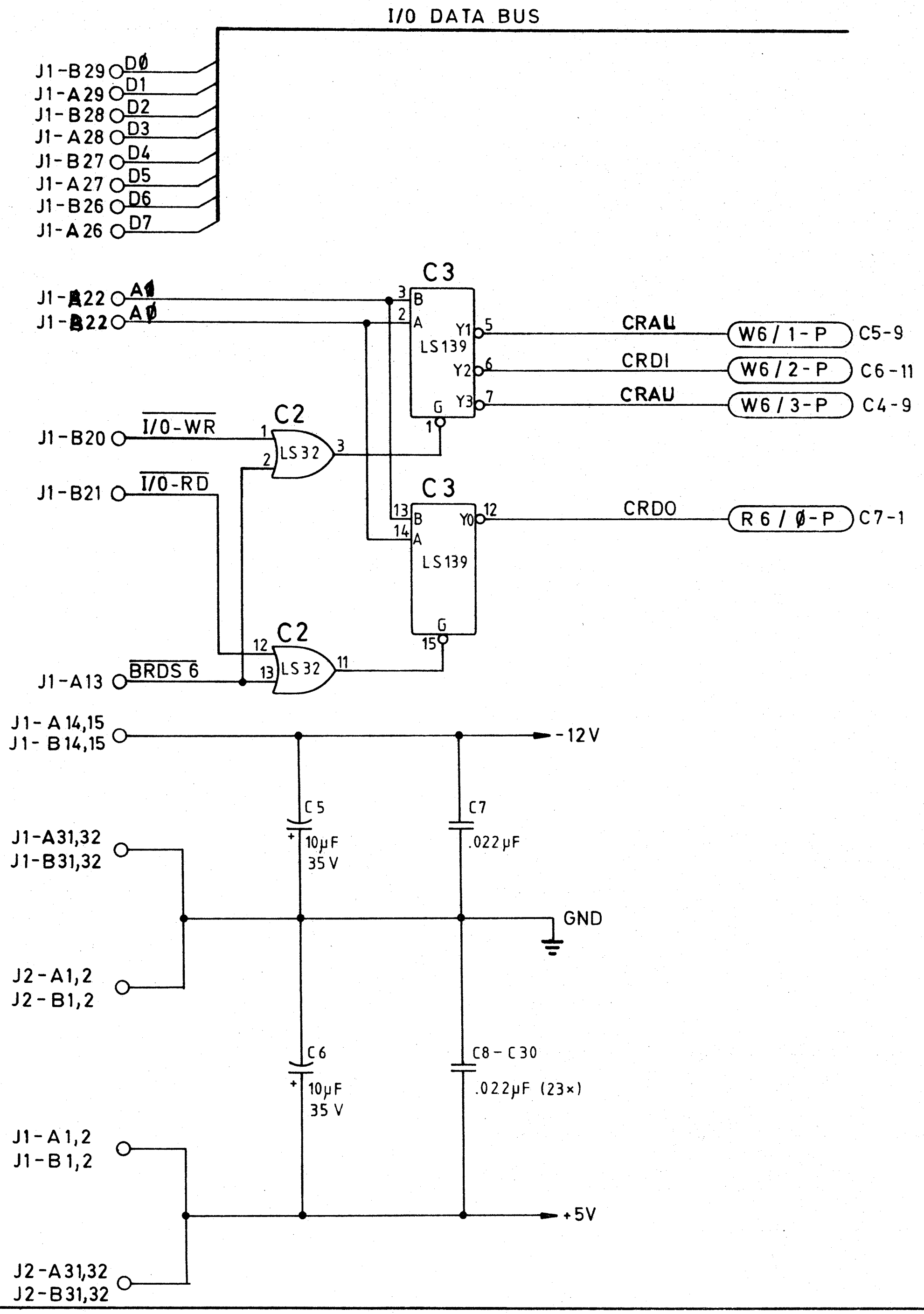

DOLCH LOGIC INSTRUMENTS

CHARACTER BOARD

CODE	ERN	DATE
F		6.5.80
G		20.5.81

REVISIONS

	DATE	NAME
DRAWN	6.5.80	Mü
CHECK		

PART NUMBER: 5 4850-04

SHEET 1/2

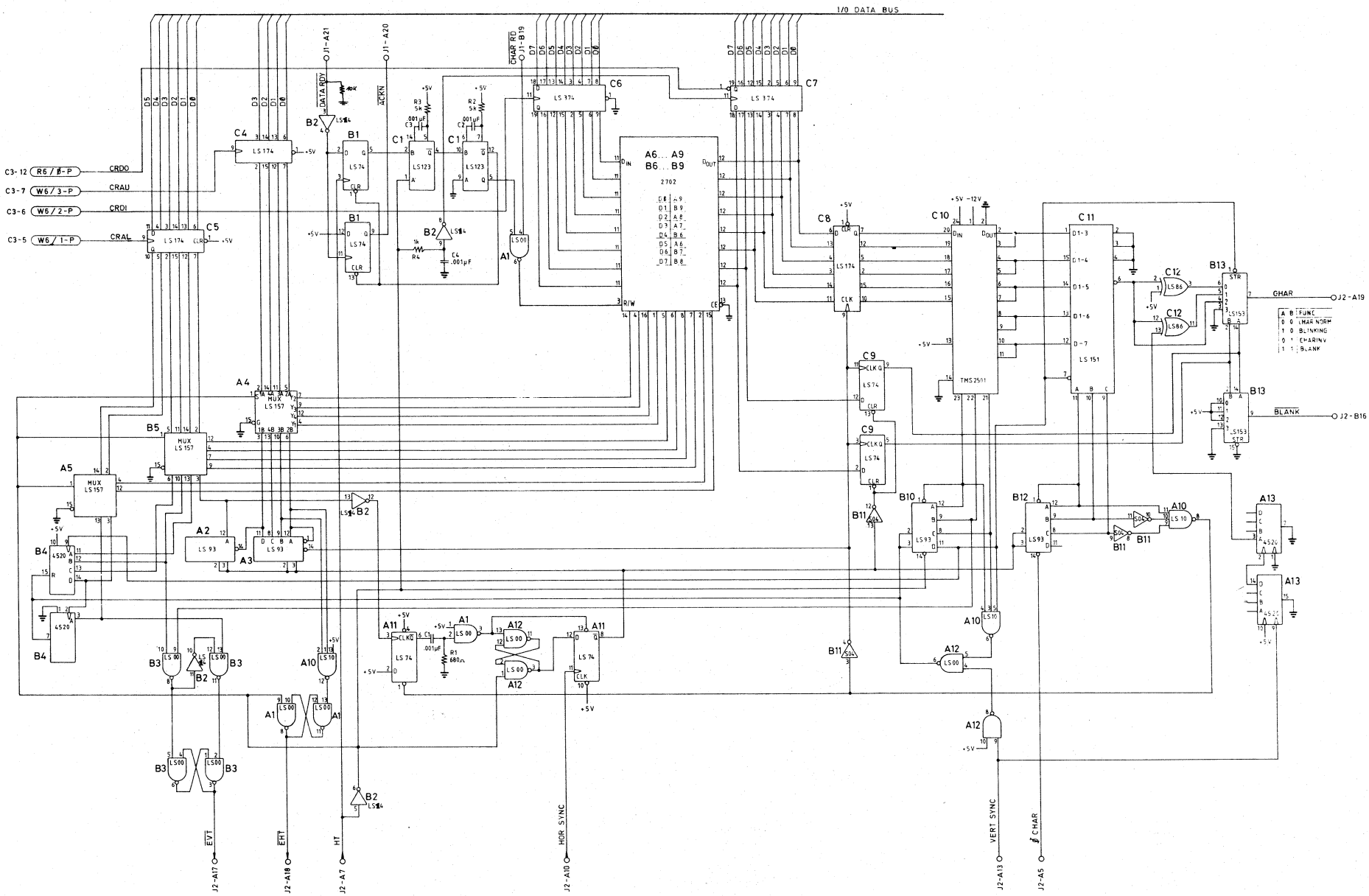

G	Ø94	20.5.81					DOLCH LOGIC INSTRUMENTS
		6.5.80					CHARACTER BOARD
CODE	ERN	DATE	REVISIONS	DATE	NAME		PART NUMBER / SHEET
							5 4850-04 / 2/2
				CHECK			
				DRAWN	6.5.80		

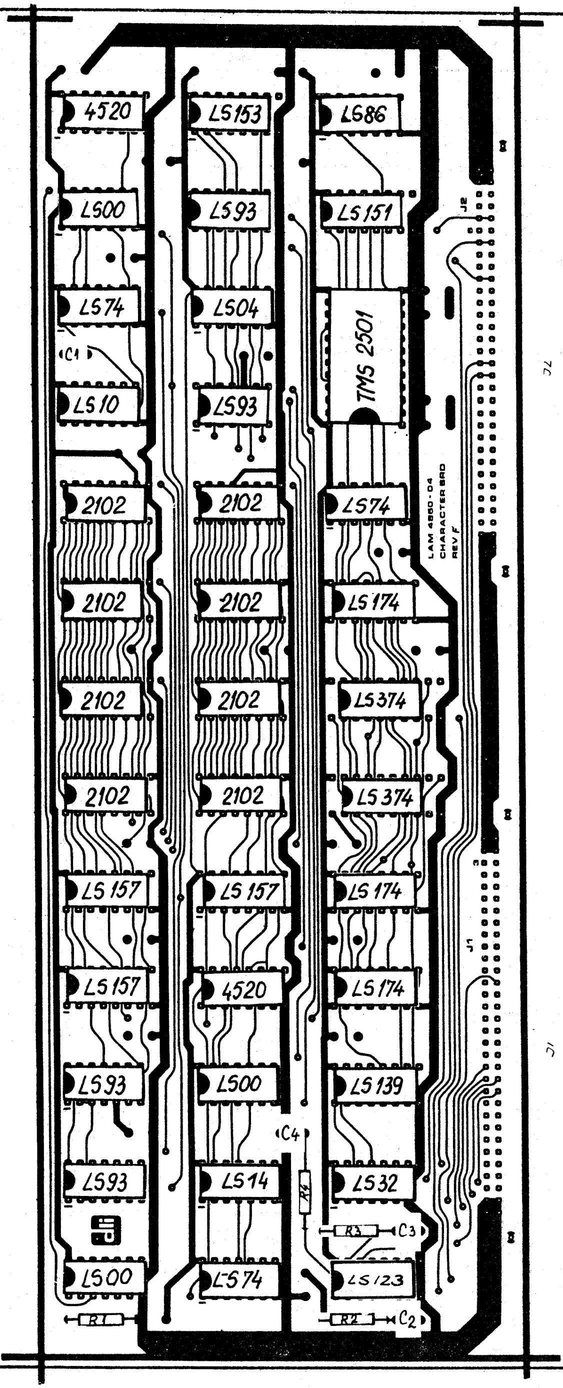

CHARACTER BRD Bauteilseite

RS = 10KΩ von IC B2 Pin 3 → GND einbauen

S 4850-04 wird ersetzt durch S 4857-04

POS.	ITEM	QTY
	LS 00	3
	LS 04	1
	LS 10	1
	LS 32	1
	LS 74	3
	LS 86	1
	LS 93	4
	LS 123	1
	LS 139	1
	LS 151	1
	LS 153	1
	LS 157	3
	LS 174	3
	LS 374	2
	LS 14	1
	2102	8
	4520	2
	TMS 2501	1
*RS	10K	1
R_1	680Ω	1
$R_{2,3}$	5K1	2
R_4	1K	1

POS	ITEM	QTY
C_{1-4}	1nF	4
	10µF/35V	2
	22n	24
	14P Sockel	15
	16P Sockel	20
	20P Sockel	2
	24P Sockel	1

Zust.	Änderung	Datum	Name

	Datum	Name
Bearb	11.6.81	Gehrke
Gepr		
Norm		

5 4850-04

Maßstab

LAM 4850

ASS'Y DRAWING - PART LIST

DOLCH LOGIC INSTRUMENTS GMBH

CHARACTER BOARD G

Blatt

Bl.

Bestell-Nr 643331 80/85 glgm

J1

A	Pin	B
+ 5 V	1	+ 5 V
+ 5 V	2	+ 5 V
	3	
	4	
	5	
	6	
	7	
	8	
	9	
	10	
	11	
	12	
$\overline{\text{BRDS 6}}$	13	
- 12 V	14	- 12 V
- 12 V	15	- 12 V
+ 12 V	16	+ 12 V
+ 12 V	17	+ 12 V
C7 = $\overline{\text{MRKLD}}$	18	C6 = $\overline{\text{CACKN}}$
C5 = $\overline{\text{CRDY}}$	19	C4 = $\overline{\text{CHAR RD}}$
C3 = $\overline{\text{ACKN}}$	20	C2 = $\overline{\text{I/O-WR}}$
C1 = DATA RDY	21	CØ = $\overline{\text{I/O-RD}}$
A1	22	AØ
A3	23	A2
A5	24	A4
A7	25	A6
D7	26	D6
D5	27	D4
D3	28	D2
D1	29	DØ
	30	
GND	31	GND
GND	32	GND

J2

A	Pin	B
GND	1	GND
GND	2	GND
	3	
	4	
Ø CHAR	5	
	6	
HT	7	
	8	
	9	
HOR SYNC	10	
	11	
	12	
VERT SYNC	13	
	14	
	15	
	16	$\overline{\text{BLANK}}$
$\overline{\text{EVT}}$	17	
$\overline{\text{EHT}}$	18	
CHAR	19	
	20	
	21	
	22	
	23	
	24	
	25	
	26	
	27	
	28	
	29	
	30	
+ 5 V	31	+ 5 V
+ 5 V	32	+ 5 V

CODE	ERN	DATE	REVISIONS DATE	NAME

CHECK
DRAWN

DOLCH LOGIC INSTRUMENTS

CHARACTER BOARD

PART NUMBER: 5 4850 - 04

SHEET: 1 / 1

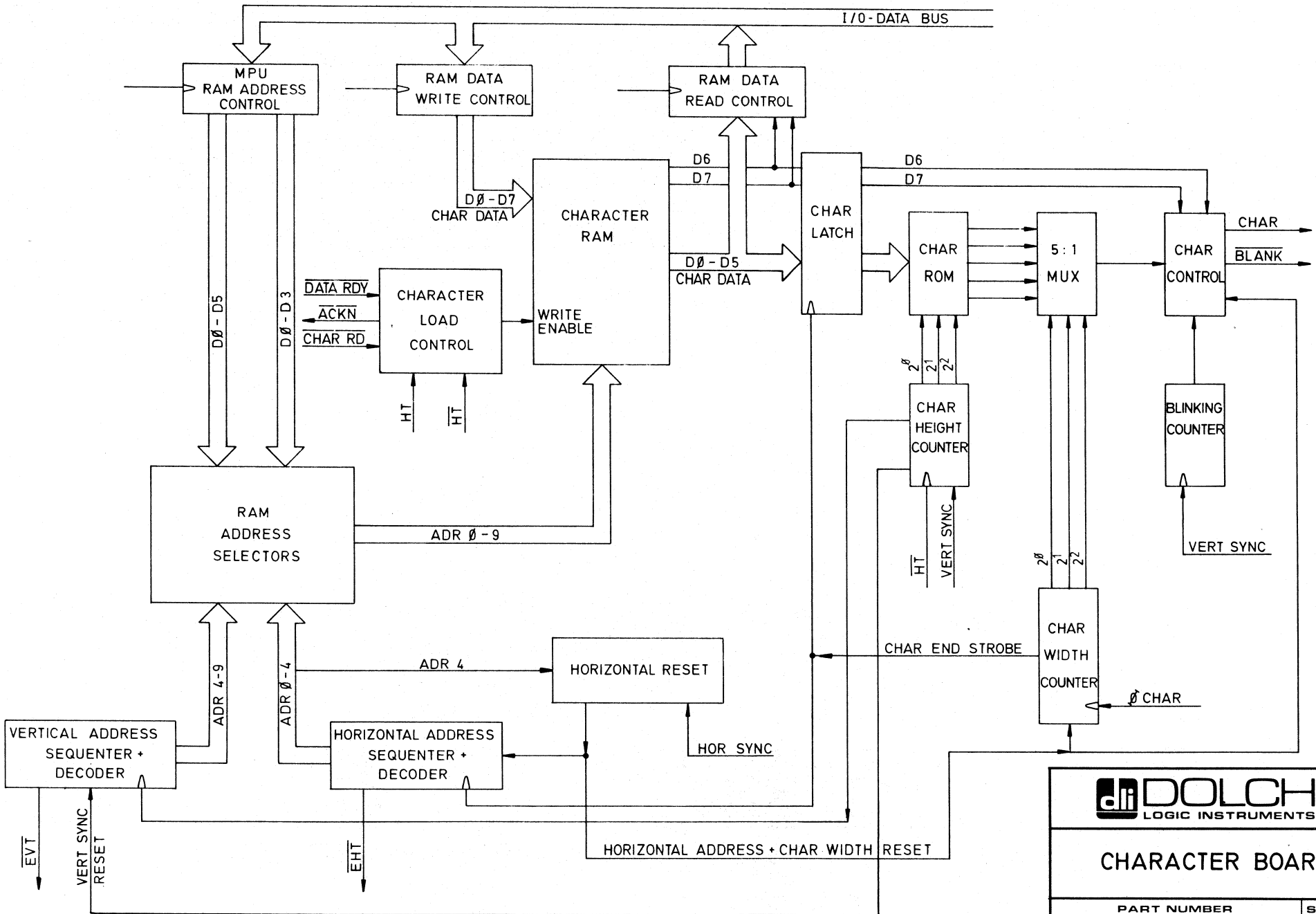
I/O-DATA BUS
MPU RAM ADDRESS CONTROL
RAM DATA WRITE CONTROL
RAM DATA READ CONTROL
D6
D7
DØ-D7
CHAR DATA
CHARACTER RAM
CHAR LATCH
CHAR ROM
5:1 MUX
CHAR CONTROL
CHAR
BLANK
DØ-D5
CHAR DATA
DØ-D5
DØ-D3
DATA RDY
ACKN
CHAR RD
CHARACTER LOAD CONTROL
WRITE ENABLE
HT
HT
2Ø
21
22
CHAR HEIGHT COUNTER
BLINKING COUNTER
VERT SYNC
HT
VERT SYNC
RAM ADDRESS SELECTORS
ADR Ø-9
ADR 4-9
ADR Ø-4
ADR 4
HORIZONTAL RESET
CHAR END STROBE
CHAR WIDTH COUNTER
Ø CHAR
VERTICAL ADDRESS SEQUENTER + DECODER
HORIZONTAL ADDRESS SEQUENTER + DECODER
HOR SYNC
EVT
VERT SYNC RESET
EHT
HORIZONTAL ADDRESS + CHAR WIDTH RESET
DOLCH LOGIC INSTRUMENTS
CHARACTER BOARD
PART NUMBER
5 4850-04
SHEET
1/1

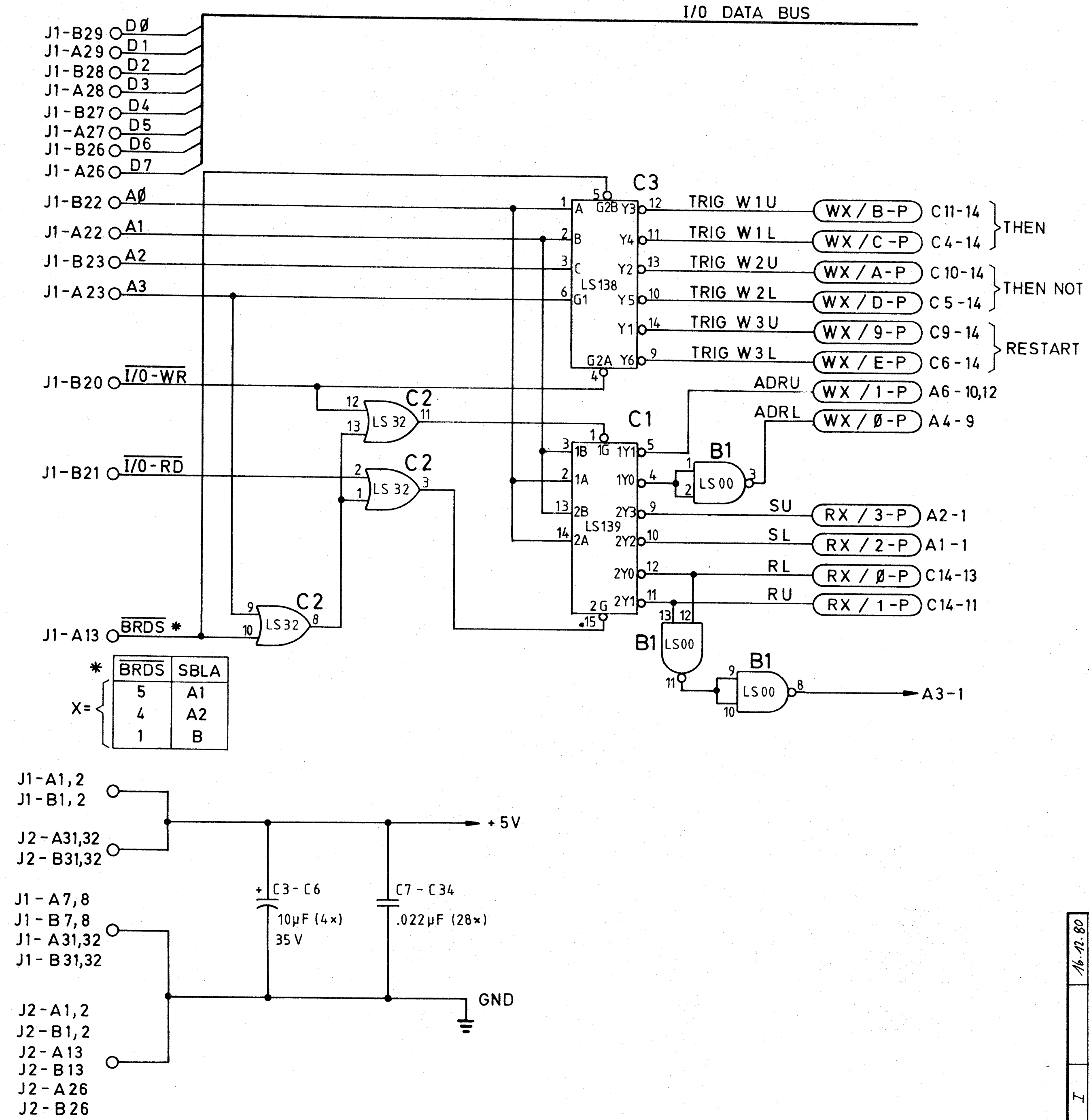

CODE	ERN	DATE
E		6.5.80
G		6.8.80
I		16.12.80

REVISIONS

	DATE	NAME
DRAWN	6.5.80	Nü
CHECK		

DOLCH LOGIC INSTRUMENTS

SBLA

PART NUMBER	SHEET
5 4850-06	1/2

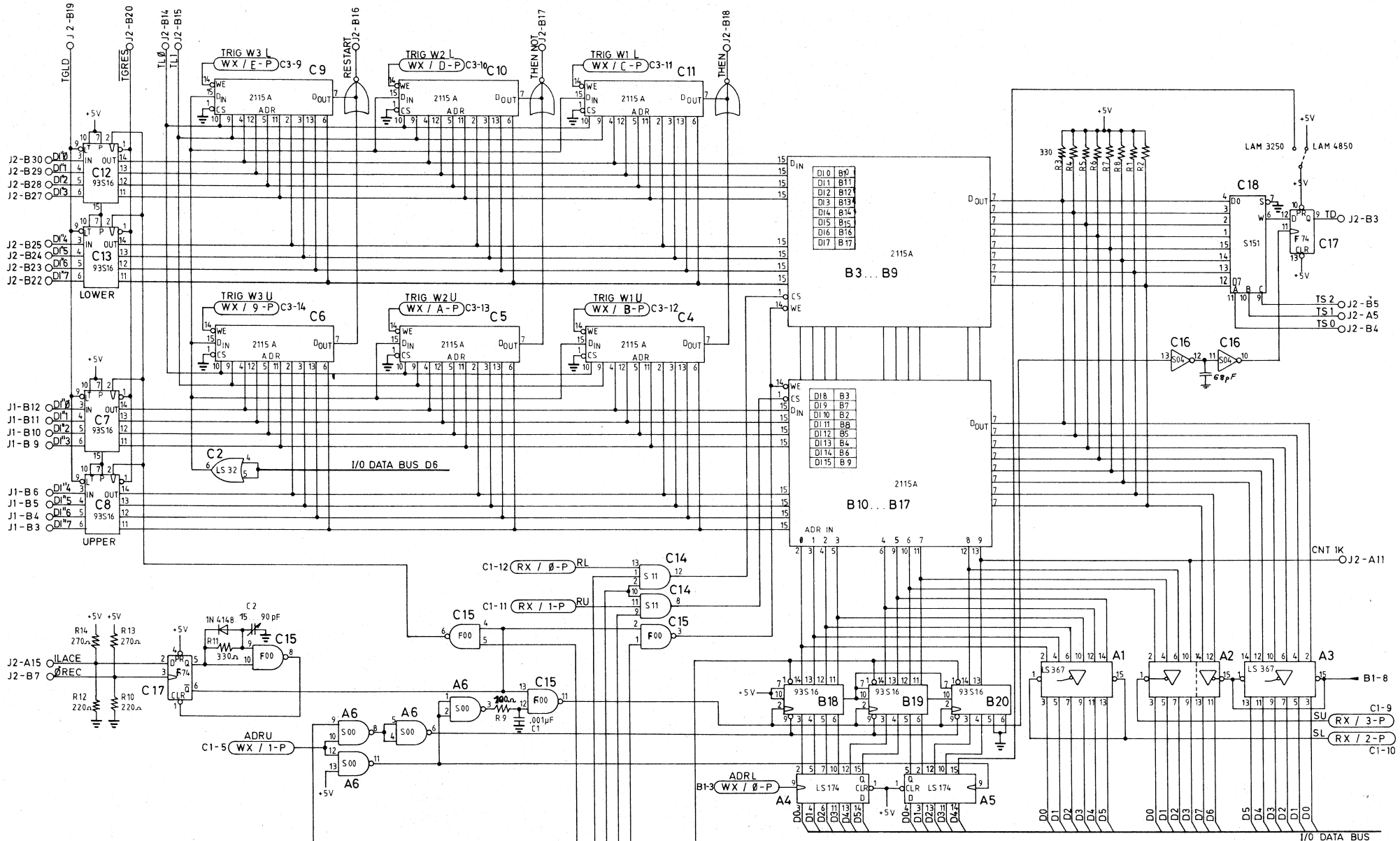
TGLD
J2-B19
TGRES
J2-B20
TL Ø
J2-B14
TL 1
J2-B15
RESTART
J2-B16
THEN NOT
J2-B17
THEN
J2-B18
TRIG W3 L
WX / E-P
C3-9
C9
TRIG W2 L
WX / D-P
C3-10
C10
TRIG W1 L
WX / C-P
C3-11
C11
2115 A
ADR
C12
93S16
C13
93S16
LOWER
J2-B30
J2-B29
J2-B28
J2-B27
J2-B25
J2-B24
J2-B23
J2-B22
TRIG W3 U
WX / 9-P
C3-14
C6
TRIG W2 U
WX / A-P
C3-13
C5
TRIG W1 U
WX / B-P
C3-12
C4
C7
93S16
C8
93S16
UPPER
J1-B12
J1-B11
J1-B10
J1-B 9
J1-B 6
J1-B 5
J1-B 4
J1-B 3
C2
LS 32
I/O DATA BUS D6
2115A
B3 ... B9
B10 ... B17
ADR IN
LAM 3250
LAM 4850
C18
S151
C17
F 74
TD
J2-B3
TS 2
TS 1
TS 0
J2-B5
J2-A5
J2-B4
C16
S04
68pF
CNT 1K
J2-A11
C1-12
RX / Ø-P
RL
C1-11
RX / 1-P
RU
C14
S 11
C15
F00
J2-A15
ILACE
J2-B7
ØREC
R14
270Ω
R13
270Ω
R12
220Ω
R10
220Ω
1N 4148
C2
15 ... 90 pF
R11
330Ω
A6
S00
100Ω
R9
.001µF
C1
ADRU
C1-5
WX / 1-P
ADRL
B1-3
WX / Ø-P
A4
LS 174
A5
B18
B19
B20
93S16
A1
A2
A3
LS 367
B1-8
C1-9
SU
RX / 3-P
SL
RX / 2-P
C1-10
I/O DATA BUS
APST
J2-A 3
LCLK
TDL
J2-B9
J2-B12
J2-B10
J2-B11
J2-B8
RUN
TDU
RRES
J2-B6
DOLCH
LOGIC INSTRUMENTS
SBLA
PART NUMBER
5 4850-06
SHEET
2/2
CODE
ERN
DATE
REVISIONS
NAME
CHECK
DRAWN
6.5.80

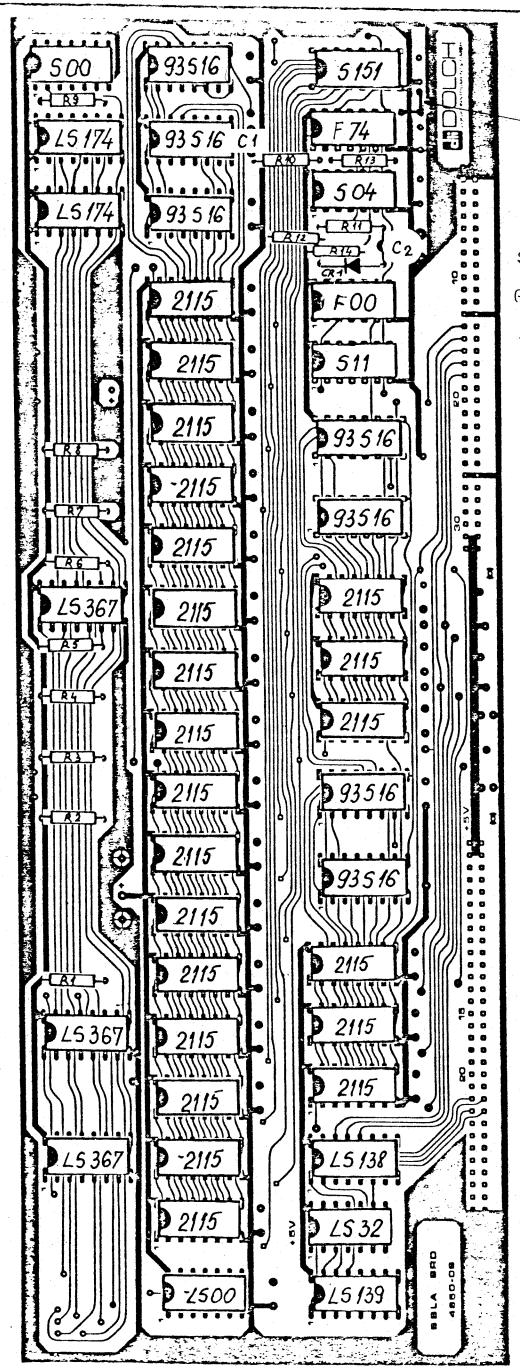

C 3 zwischen Pin 12 und 14 von IC C 16 auf Lötseite.

Ab Rev. K im Layout

LAM 3250 —
LAM 4850 }

LAM4850 A1
LAM 3250 A2

POS.	ITEM	QTY	POS	ITEM	QTY
	LS00	1		10µF / 35V	4
	S 00	1		22n	28
	S 04	1	C3	68p	1
	S 11	1		14P Sockel	7
	LS 32	1		16P Sockel	37
	F 74	1			
	LS 138	1			
	LS 139	1			
	S 151	1			
	LS 174	2			
	LS 367	3			
	F00	1			
	93S16	7			
	2115	22			
R11	330Ω	1			
R1-8	330 Ω	8			
R 10,12	220 Ω	2			
R13,14	270 Ω	2			
R9	100Ω	1			
CR1	1N 4148	1			
C1	1nF	1			
C2	5 - 90 pF	1			

GEPRÜFT 5. OKT. 1980

	Datum	Name
Bearb	24.3.81	Gehrke
Gepr.		
Norm		

Zust | Änderung | Datum | Name

5 4850-6 A2
A 1

Maßstab | LAM 3250

ASS'Y DRAWING - PART LIST

DOLCH LOGIC INSTRUMENTS GMBH

SBLA BOARD I

Blatt

J1

A	Pin	B
+ 5 V	1	+ 5 V
+ 5 V	2	+ 5 V
	3	DI 15
	4	DI 14
	5	DI 13
	6	DI 12
	7	GND
	8	GND
	9	DI 11
	10	DI 10
	11	DI 9
	12	DI 8
SBLA *	13	
- 12 V	14	- 12 V
- 12 V	15	- 12 V
+ 12 V	16	+ 12 V
+ 12 V	17	+ 12 V
C7 = $\overline{\text{MRKLD}}$	18	C6 = $\overline{\text{CACKN}}$
C5 = $\overline{\text{CRDY}}$	19	C4 = $\overline{\text{CHAR RD}}$
C3 = $\overline{\text{ACKN}}$	20	C2 = $\overline{\text{I/O-WR}}$
C1 = DATA RDY	21	CØ = $\overline{\text{I/O-RD}}$
A 1	22	A Ø
A 3	23	A 2
A 5	24	A 4
A 7	25	A 6
D 7	26	D 6
D 5	27	D 4
D 3	28	D 2
D 1	29	D Ø
	30	
GND	31	GND
GND	32	GND

* A 1: BRDS 5
A 2: BRDS 4
B : BRDS 1

J2

A	Pin	B
GND	1	GND
GND	2	GND
$\overline{\text{APST}}$	3	TD
	4	TS Ø
TS 1	5	TS 2
	6	$\overline{\text{RRES}}$
	7	ØREC
	8	RUN
	9	LCLK
	10	$\overline{\text{RUN}}$
CNT 1K	11	$\overline{\text{TDU}}$
	12	$\overline{\text{TDL}}$
	13	GND
	14	TL Ø
ILACE	15	TL 1
	16	RESTART
	17	THEN NOT
	18	$\overline{\text{THEN}}$
	19	$\overline{\text{TGLD}}$
	20	$\overline{\text{TGRES}}$
	21	GND
	22	DI 7
	23	DI 6
	24	DI 5
	25	DI 4
	26	GND
	27	DI 3
	28	DI 2
	29	DI 1
	30	DI Ø
+ 5 V	31	+ 5 V
+ 5 V	32	+ 5 V

CODE	ERN	DATE	REVISIONS DATE	NAME	CHECK	DRAWN

DOLCH LOGIC INSTRUMENTS

SBLA BOARD

PART NUMBER	SHEET
5 4850 - 06	1/1

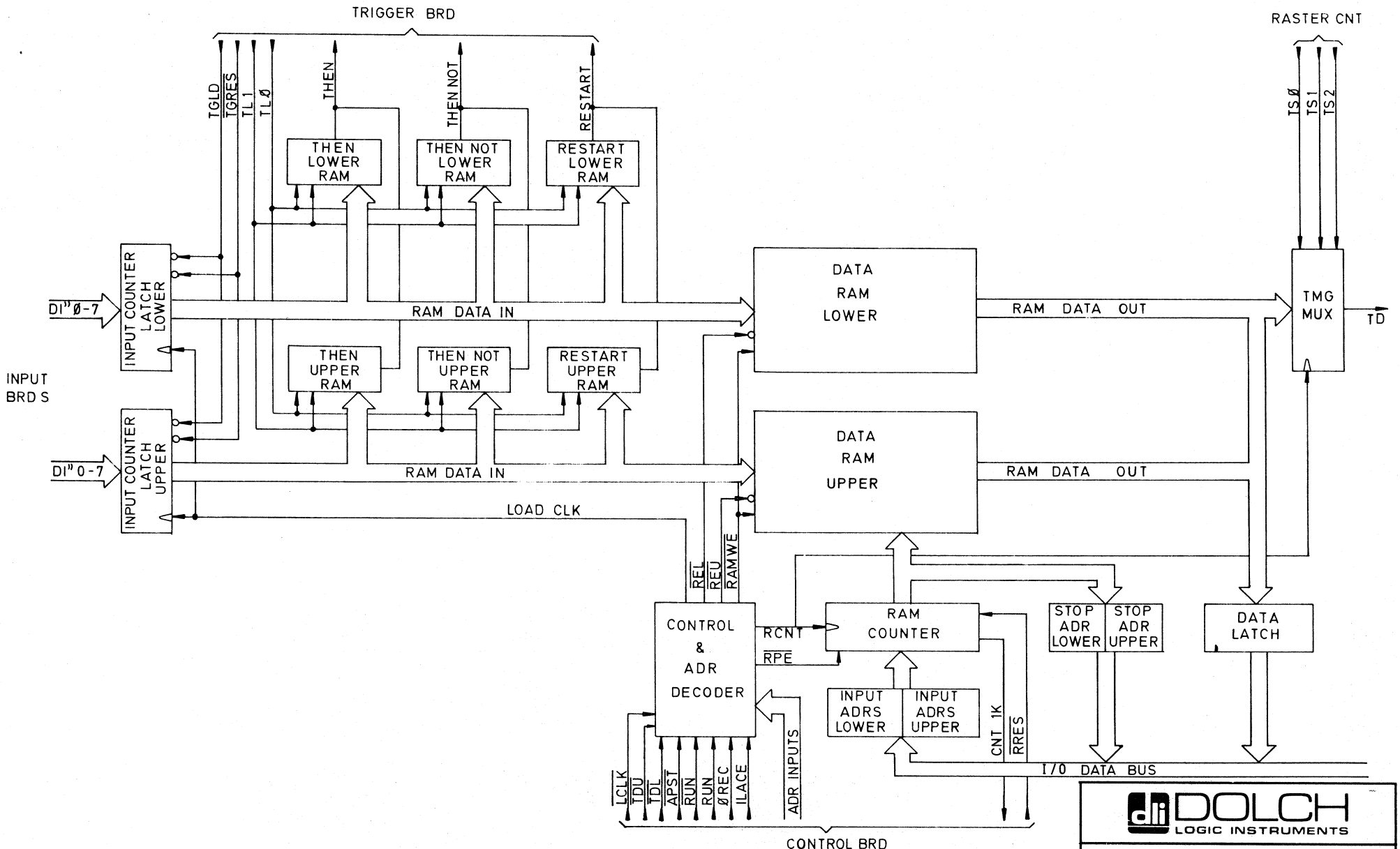

DOLCH LOGIC INSTRUMENTS

SBLA BOARD

PART NUMBER	SHEET
5 4850-06	1/1

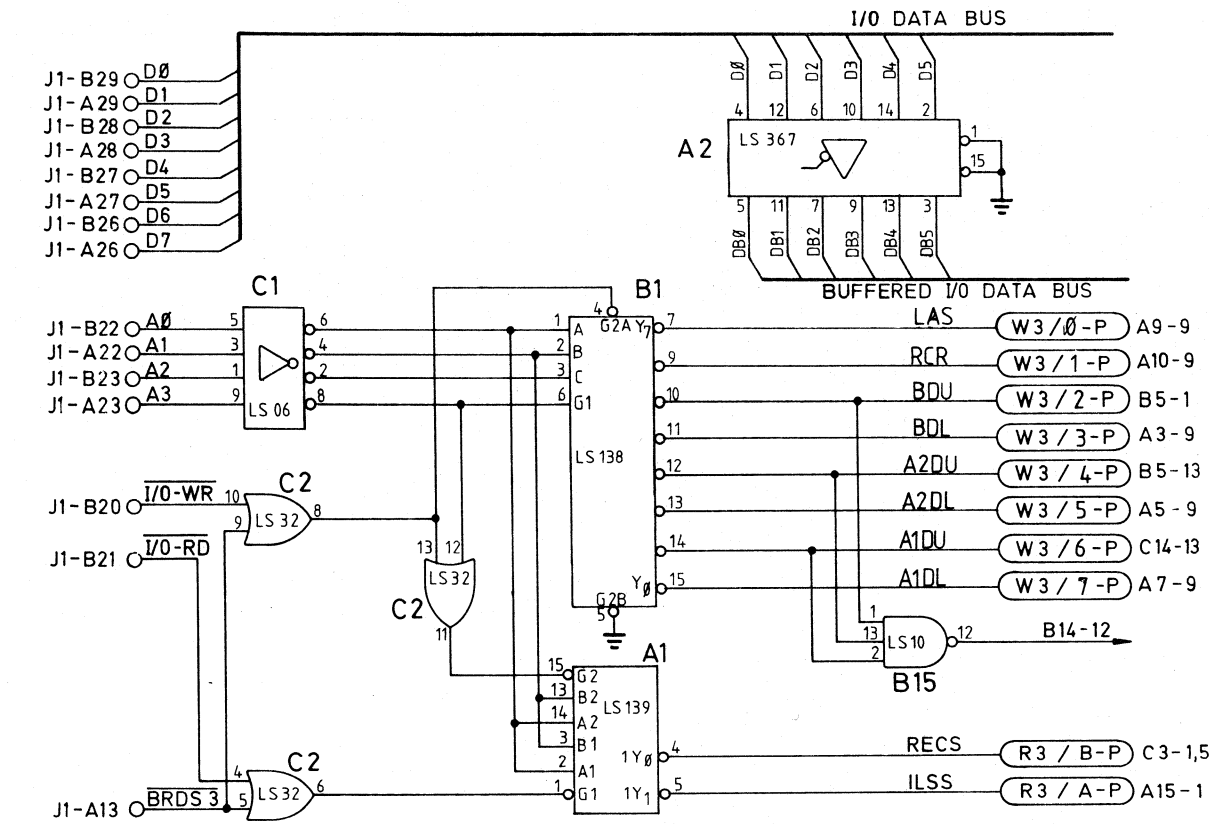

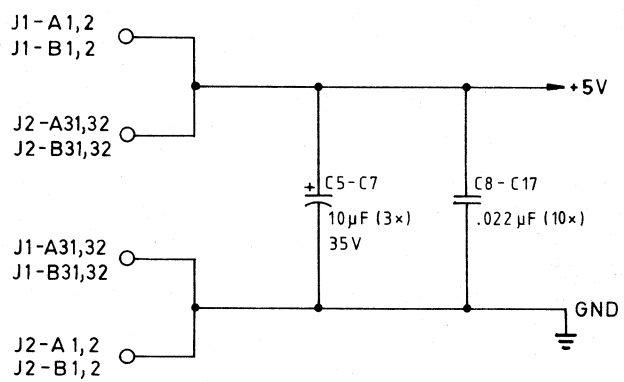

	24.4.81	6.5.80	DATE	NAME		DOLCH LOGIC INSTRUMENTS
			ERN	DATE	6.5.80	CONTROL BOARD
H		G	CODE	REVISIONS	CHECK / DRAWN	PART NUMBER: 5 4850-07 — SHEET 1/3

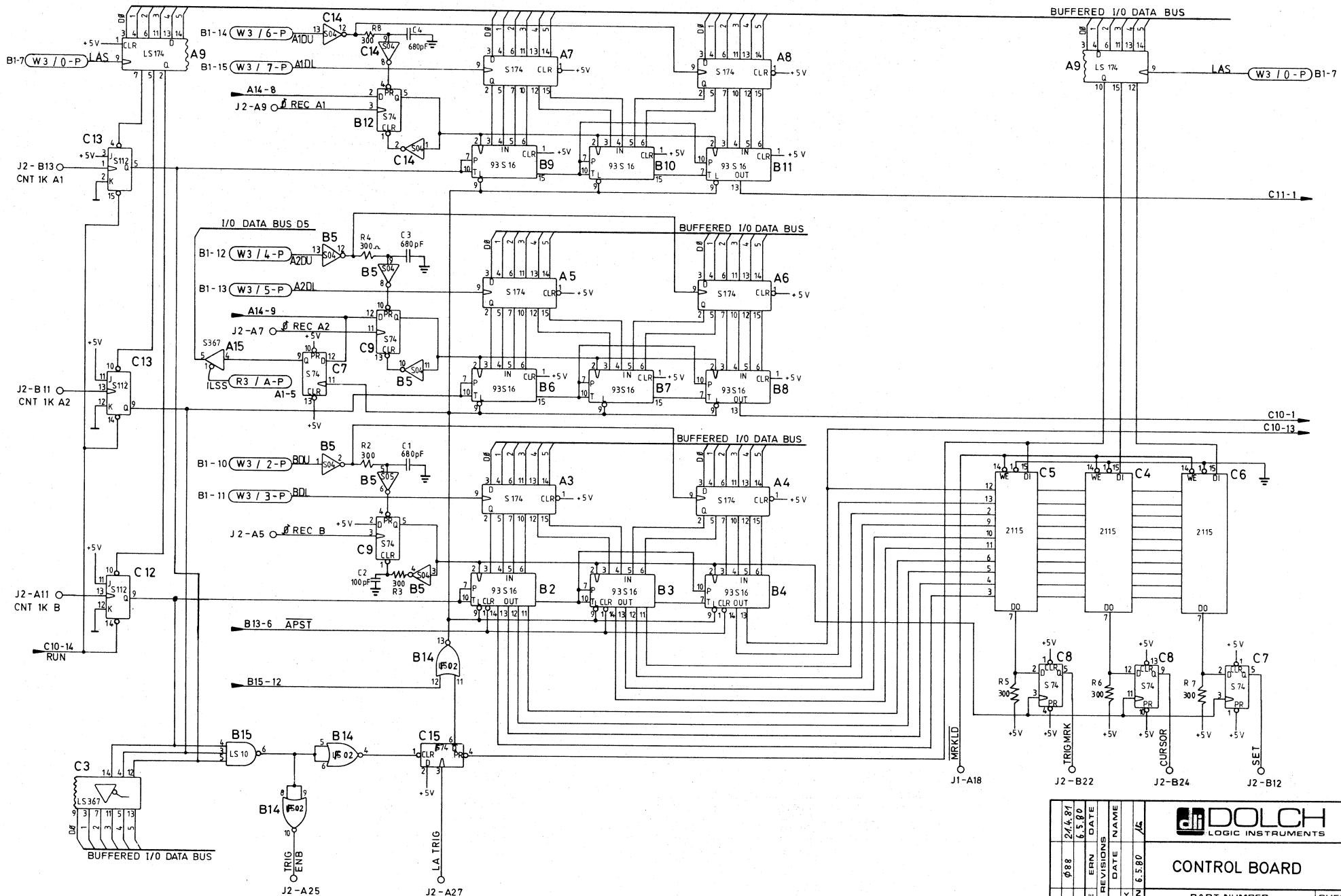
BUFFERED I/O DATA BUS
B1-7 W3 / 0-P LAS
B1-14 W3 / 6-P A1DU
B1-15 W3 / 7-P A1DL
A14-8
J2-A9 Ø REC A1
J2-B13 CNT 1K A1
I/O DATA BUS D5
B1-12 W3 / 4-P A2DU
B1-13 W3 / 5-P A2DL
A14-9
J2-A7 Ø REC A2
ILSS R3 / A-P A1-5
J2-B11 CNT 1K A2
B1-10 W3 / 2-P BDU
B1-11 W3 / 3-P BDL
J2-A5 Ø REC B
J2-A11 CNT 1K B
C10-14 RUN
B13-6 APST
B15-12
C11-1
C10-1
C10-13
MRKLD
TRIG MRK
CURSOR
SET
J1-A18
J2-B22
J2-B24
J2-B12
TRIG ENB
J2-A25
LA TRIG
J2-A27
DOLCH LOGIC INSTRUMENTS
CONTROL BOARD
PART NUMBER 5 4850-07
SHEET 2/3
REVISIONS
CODE H G
ERN Ø88
DATE 24.4.81 6.5.80
NAME
CHECK
DRAWN 6.5.80

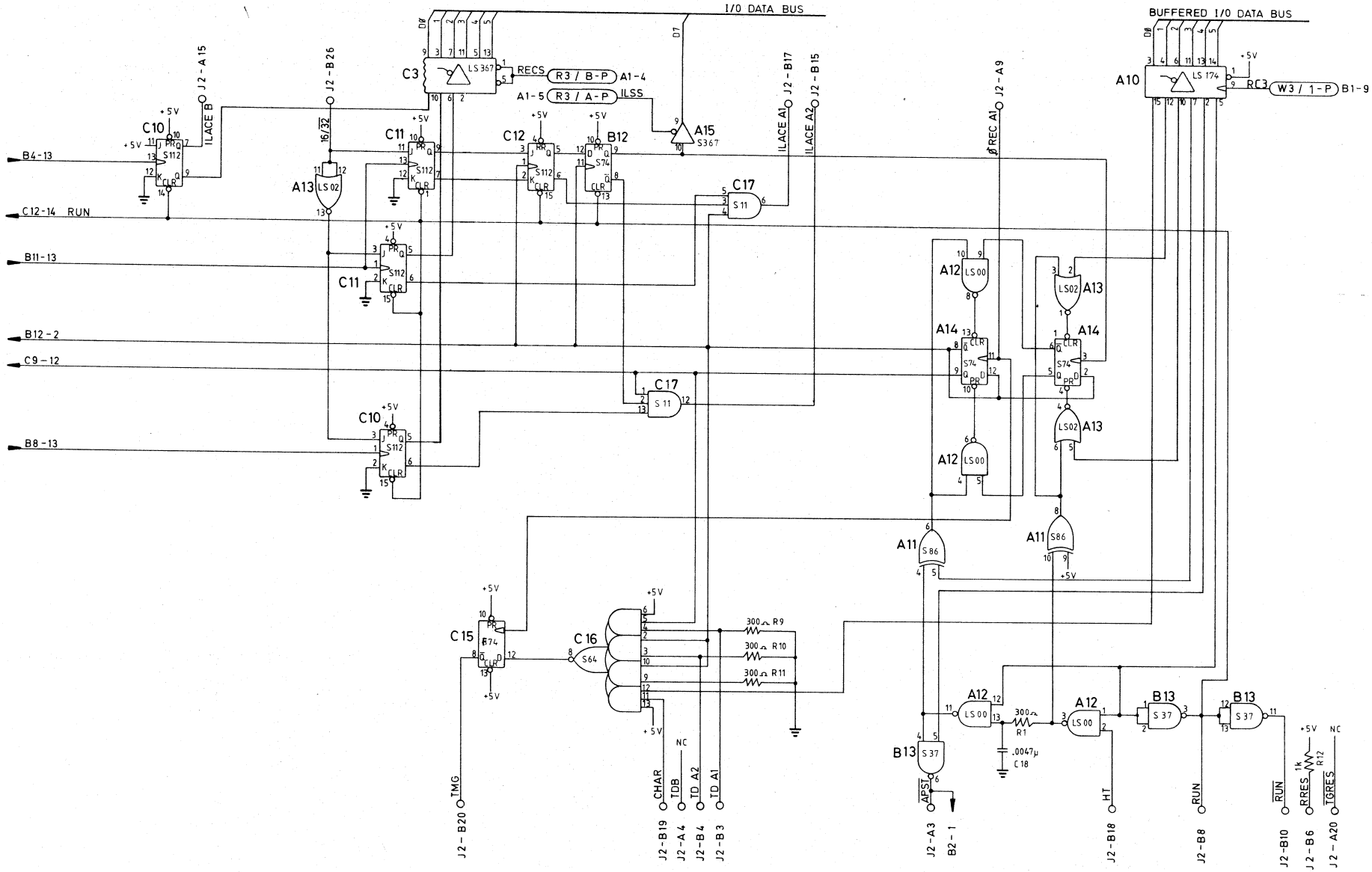
I/O DATA BUS
BUFFERED I/O DATA BUS
C3 LS 367
RECS
R3 / B-P
A1-4
A1-5
R3 / A-P
ILSS
A15 S367
A10 LS 174
RC3
W3 / 1-P
B1-9
C10
C11
C12
B12
C17
A13 LS 02
A12 LS 00
A14 S74
A11 S86
C15 S74
C16 S64
B13 S 37
B4-13
C12-14 RUN
B11-13
B12-2
C9-12
B8-13
J2-A15
J2-B26
ILACE B
ILACE A1
ILACE A2
J2-B17
J2-B15
J2-A9
REC A1
16/32
300Ω R9
300Ω R10
300Ω R11
300Ω R1
.0047μ C18
1k R12
APST
HT
RUN
RRES
TGRES
TMG
CHAR
TDB
TD A2
TD A1
NC
J2-B20
J2-B19
J2-A4
J2-B4
J2-B3
J2-A3
B2-1
J2-B18
J2-B8
J2-B10
J2-B6
J2-A20
DOLCH LOGIC INSTRUMENTS
CONTROL BOARD
PART NUMBER
5 4850-07
SHEET 3/3
CODE
ERN
DATE
REVISIONS
NAME
CHECK
DRAWN
6.5.80

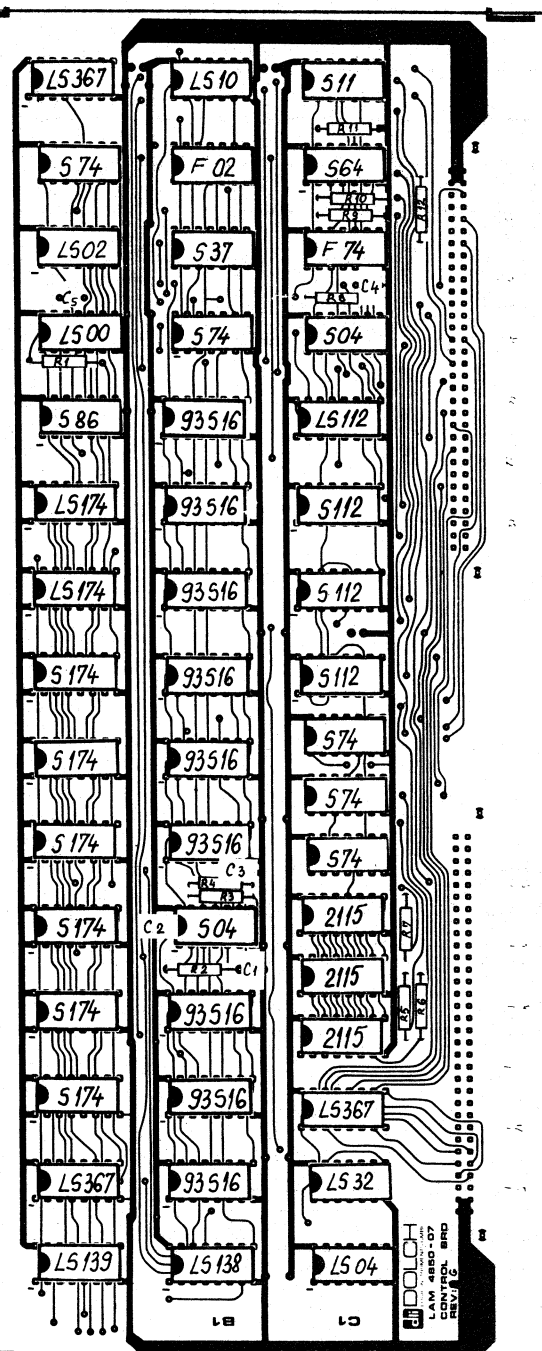

POS.	ITEM	QTY	POS	ITEM	QTY
	LS 00	1	R_{1-11}	300 Ω	11
	LS 02	1	R_{12}	1K	1
	F 02	1	C_5	4,7u	1
	LS 04	1	$C_{1,3,4}$	680pF	3
	S 04	2	C_2	100p	1
	LS 10	1		10µF/35V	3
	S 11	1		22 n	11
	LS 32	1			
	S 37	1		14 P Sockel	18
	S 64	1		16P Sockel	29
	S 74	5			
	S 86	1			
	LS 112	1			
	S 112	3			
	LS 138	1			
	LS 139	1			
	LS 174	2			
	S 174	6			
	LS 367	3			
	93 516	9			
	2115	3			
	F 74	1			

Zust	Änderung	Datum	Name

	Datum	Name
Bearb	22.4.81	Gehrke
Gepr.		
Norm		

5 4850-07

Maßstab LAM 4850

ASS'Y DRAWING - PART LIST

DOLCH LOGIC INSTRUMENTS GMBH

CONTROL BOARD H

Blatt B1

Bestell-Nr 643331 80485 gigm

J1

A	Pin	B
+ 5 V	1	+ 5 V
+ 5 V	2	+ 5 V
	3	
	4	
CLK ON/ $\overline{OFF}$	5	
	6	
	7	
	8	
	9	
	10	
	11	
	12	
$\overline{BRDS\ 3}$	13	
- 12 V	14	- 12 V
- 12 V	15	- 12 V
+ 12 V	16	+ 12 V
+ 12 V	17	+ 12 V
C 7 = $\overline{MRKLD}$	18	C 6 = $\overline{CACKN}$
C 5 = $\overline{CRDY}$	19	C 4 = $\overline{CHAR\ RD}$
C 3 = $\overline{ACKN}$	20	C 2 = $\overline{I/O\text{-}WR}$
C 1 = DATA RDY	21	C Ø = $\overline{I/O\text{-}RD}$
A 1	22	A Ø
A 3	23	A 2
A 5	24	A 4
A 7	25	A 6
D 7	26	D 6
D 5	27	D 4
D 3	28	D 2
D 1	29	D Ø
	30	
GND	31	GND
GND	32	GND

J2

A	Pin	B
GND	1	GND
GND	2	GND
$\overline{APST}$	3	TD A 1
TDB	4	TD A 2
Ø REC B	5	
	6	$\overline{RRES}$
Ø REC A 2	7	
	8	RUN
Ø REC A 1	9	
	10	$\overline{RUN}$
CNT 1K B	11	CNT 1K A 2
	12	SET
	13	CNT 1K A 1
	14	
ILACE B	15	ILACE A 2
	16	
	17	ILACE A 1
	18	HT
	19	CHAR
$\overline{TGRES}$	20	TMG
	21	
	22	TRIG MRK
	23	
	24	CURSOR
TRIG ENB	25	
	26	16 / $\overline{32}$
LATRIG	27	
	28	
	29	
	30	
+ 5 V	31	+ 5 V
+ 5 V	32	+ 5 V

CODE	ERN	DATE	REVISIONS	DATE	NAME	CHECK	DRAWN

DOLCH LOGIC INSTRUMENTS

CONTROL BOARD

PART NUMBER: 5 4850 - 07

SHEET: 1/1

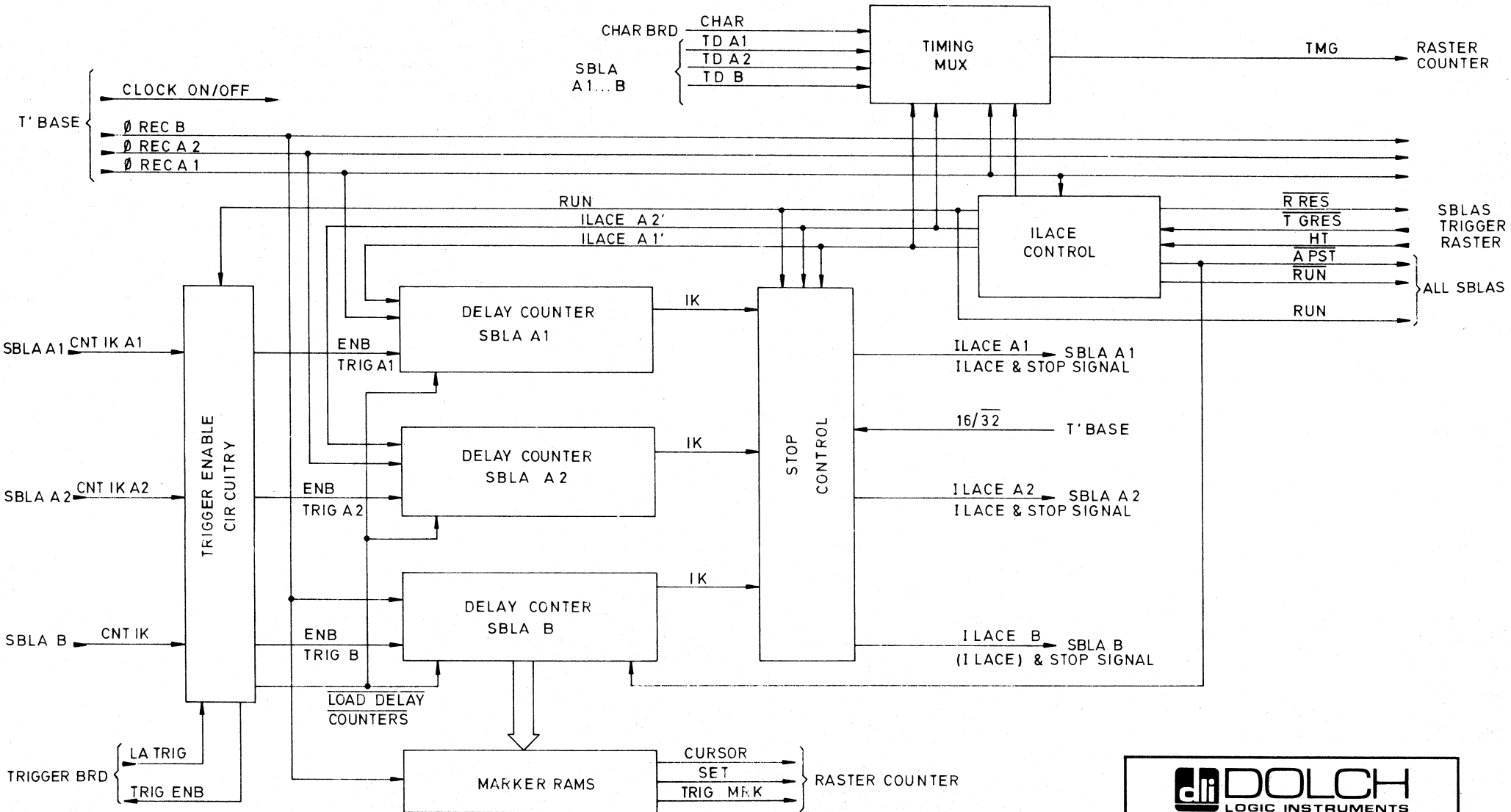

DOLCH LOGIC INSTRUMENTS

CONTROL BOARD

PART NUMBER	SHEET
5 4850 - 07	1/1

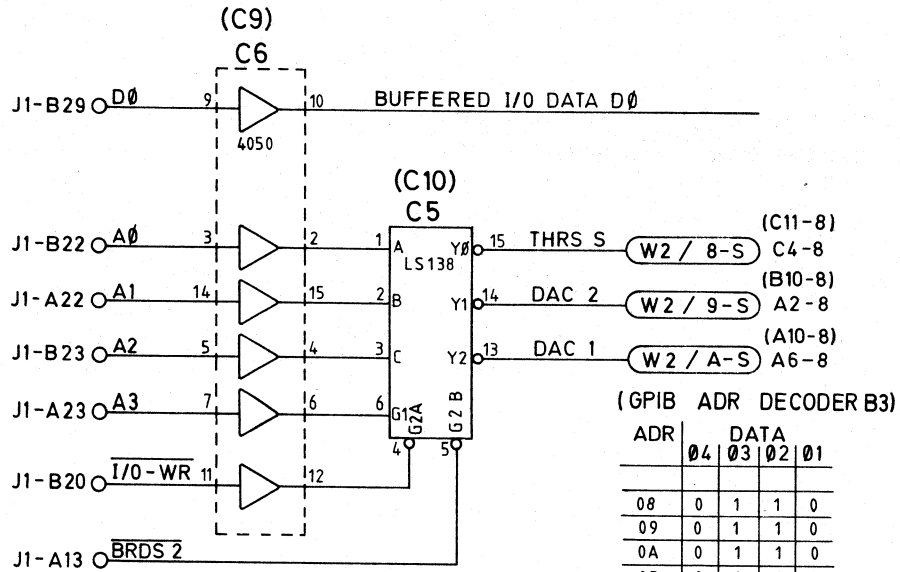

(GPIB ADR DECODER B3)

ADR	DATA Ø4	Ø3	Ø2	Ø1
08	0	1	1	0
09	0	1	1	0
0A	0	1	1	0
0B	0	1	1	0
0C	0	1	1	0
0D	0	1	1	0
0E	0	1	1	0
0F	0	1	1	0
28	0	1	0	1
ALL OTHER	1	1	1	1

(- - -)=GPIB OPTION ONLY
5 4850-08

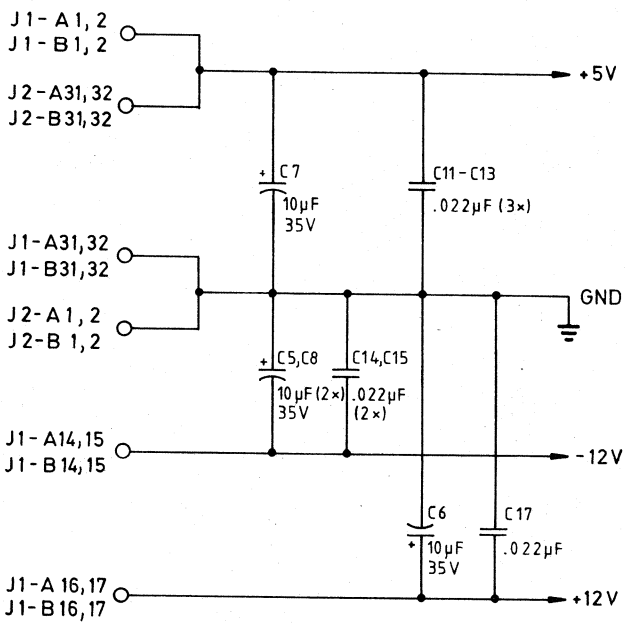

NOTES:

1.THRESHOLD BOARD WITHOUT GPIB LAYOUT: TO 5 4850-09

		6.5.80	DATE	REVISIONS	NAME	
			ERN		DATE	6.5.80
		G	CODE		CHECK	
					DRAWN	

DOLCH LOGIC INSTRUMENTS

GPIB / THRESHOLD BRD

PART NUMBER: 5 4850-08

SHEET 1/3

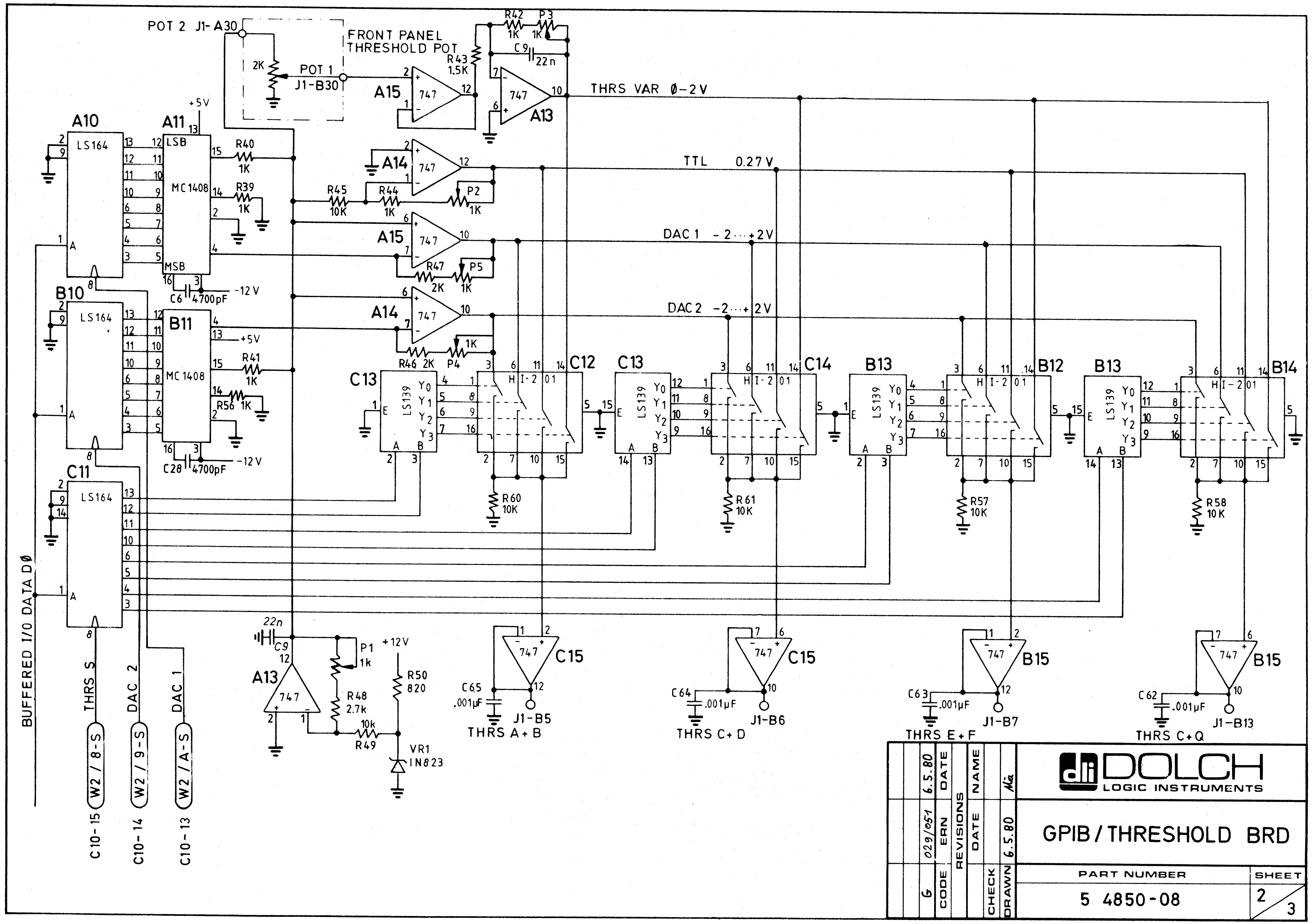

CODE	ERN	DATE
G	029/051	6.5.80

REVISIONS

	DATE	NAME
DRAWN	6.5.80	Ma
CHECK		

DOLCH LOGIC INSTRUMENTS

GPIB / THRESHOLD BRD

PART NUMBER 5 4850-08

SHEET 2 / 3

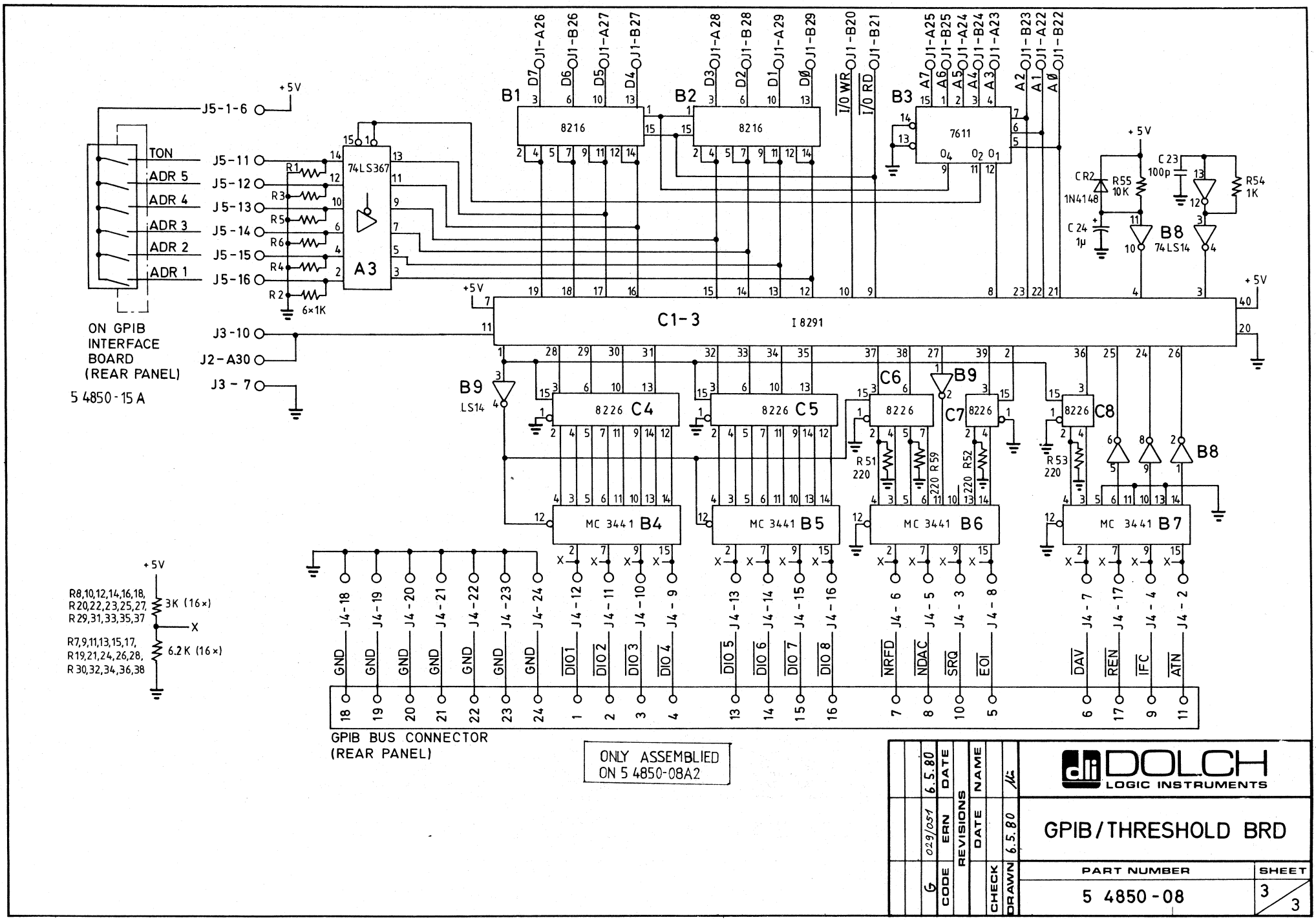
ON GPIB INTERFACE BOARD (REAR PANEL)
5 4850-15 A
TON
ADR 5
ADR 4
ADR 3
ADR 2
ADR 1
J5-1-6
J5-11
J5-12
J5-13
J5-14
J5-15
J5-16
J3-10
J2-A30
J3-7
+5V
R1
R3
R5
R6
R4
R2
6×1K
74LS367
A3
B1
8216
B2
8216
B3
7611
D7 OJ1-A26
D6 OJ1-B26
D5 OJ1-A27
D4 OJ1-B27
D3 OJ1-A28
D2 OJ1-B28
D1 OJ1-A29
D0 OJ1-B29
I/O WR OJ1-B20
I/O RD OJ1-B21
A7 OJ1-A25
A6 OJ1-B25
A5 OJ1-A24
A4 OJ1-B24
A3 OJ1-A23
A2 OJ1-B23
A1 OJ1-A22
A0 OJ1-B22
C1-3
I 8291
B9
LS14
C4
8226
C5
8226
C6
8226
C7
8226
C8
8226
R51 220
R59 220
R52 220
R53 220
B8
74LS14
C23 100p
R54 1K
CR2 1N4148
R55 10K
C24 1µ
MC 3441 B4
MC 3441 B5
MC 3441 B6
MC 3441 B7
R8,10,12,14,16,18, R20,22,23,25,27, R29,31,33,35,37
3K (16×)
R7,9,11,13,15,17, R19,21,24,26,28, R30,32,34,36,38
6.2 K (16×)
GND
DIO 1
DIO 2
DIO 3
DIO 4
DIO 5
DIO 6
DIO 7
DIO 8
NRFD
NDAC
SRQ
EOI
DAV
REN
IFC
ATN
GPIB BUS CONNECTOR (REAR PANEL)
ONLY ASSEMBLIED ON 5 4850-08A2
DOLCH LOGIC INSTRUMENTS
GPIB/THRESHOLD BRD
PART NUMBER
5 4850-08
SHEET
3/3
DATE 6.5.80
ERN 029/051
CODE G
REVISIONS
NAME
DATE
CHECK
DRAWN 6.5.80

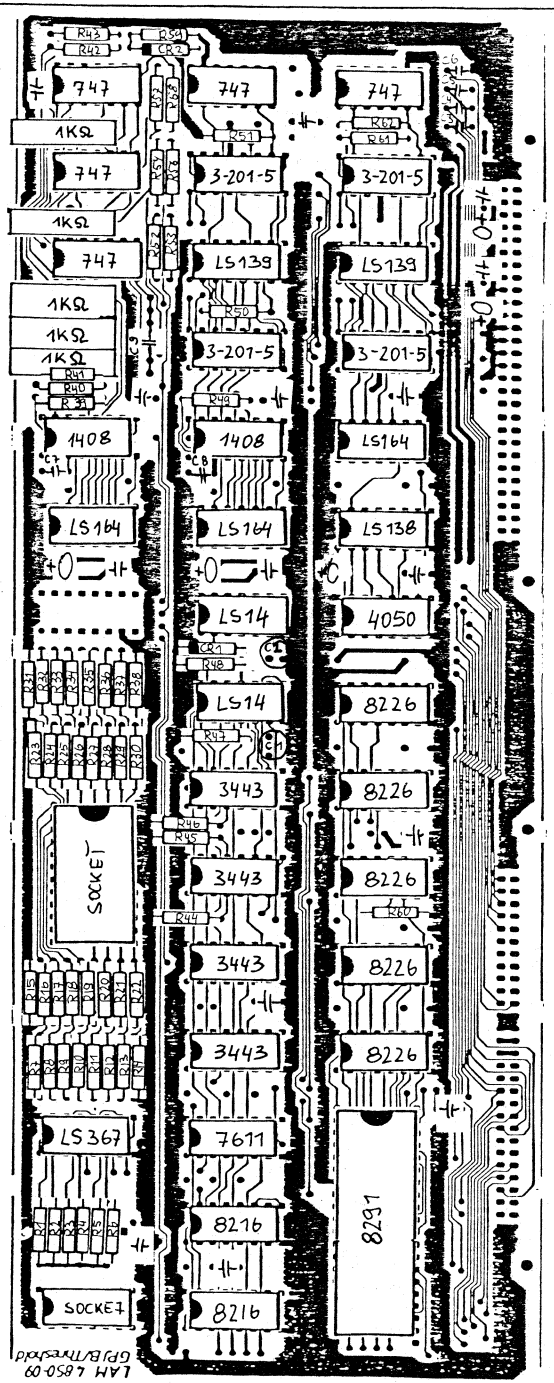

POS.	ITEM	QTY
	747	5
	HI 3-201-5	4
	LS139	2
	LS 164	3
	1408	2
	LS138	1
	4050	1
	3443 / 3441	4
	8226	5
	8216	2
	7611 (PROM)	1
	LS367	1
	LS 14	2
R7 -14	6K2	16
R 31 -38		
R15 -22	3K01 1%	16
R 23 -30		
R 39, 40, 41	1K	13
R 47,49		
R 52,54		
R 1 ... 6		
R 42	2K7	1

POS	ITEM	QTY
R51, 48, 50, 56	10 K	7
R,43 61,62		
R 53	1K5	1
R 57,58	2K	2
R59	820 Ω	1
R 44 45 46,60	220 Ω	4
CR 2	1N 823	1
CR1	1N 4148	1
C_9	22n	1
C1	100p	1
C2	1µF / 35V	1
C3-6	1uF	4
	22nF	19
	6,8µF / 35V	5
	R-Trimmer 1K	5
	14P SOCKET	10
	16P SOCKET	23
	40P SOCKET	1
	16P Precision Socket	1
	24P Precision Socket	1
	8291	1
$C_{7,8}$	4,7n	2

Zust	Änderung	Datum	Name

	Datum	Name
Bearb	1.8.80	Gehrke
Gepr	19.9.80	Claus
Norm		

5 4850 0B A2

Maßstab

LAM 4850

ASS'Y DRAWING - PART LIST

DOLCH LOGIC INSTRUMENTS GMBH

THRESHOLD / GPJB

Rev. G

Blatt

Bl

J1

A	J1	B
+ 5 V	1	+ 5 V
+ 5 V	2	+ 5 V
	3	
	4	
	5	THRS A + B
	6	THRS C + D
	7	THRS E + F
	8	
	9	
	10	
	11	
	12	
$\overline{\text{BRDS 2}}$	13	THRS C + Q
- 12 V	14	- 12 V
- 12 V	15	- 12 V
+ 12 V	16	+ 12 V
+ 12 V	17	+ 12 V
C 7 = $\overline{\text{MRKLD}}$	18	C 6 = $\overline{\text{CACKN}}$
C 5 = $\overline{\text{CRDY}}$	19	C 4 = $\overline{\text{CHAR RD}}$
C 3 = $\overline{\text{ACKN}}$	20	C 2 = $\overline{\text{I/O-WR}}$
C 1 = DATA RDY	21	C Ø = $\overline{\text{I/O-RD}}$
A 1	22	A Ø
A 3	23	A 2
A 5	24	A 4
A 7	25	A 6
D 7	26	D 6
D 5	27	D 4
D 3	28	D 2
D 1	29	D Ø
POT 2	30	POT 1
GND	31	GND
GND	32	GND

J2

A	J2	B
GND	1	GND
GND	2	GND
	3	
	4	
	5	
	6	
	7	
	8	
	9	
	10	
	11	
	12	
	13	
	14	
	15	
	16	
	17	
	18	
	19	
	20	
	21	
	22	
	23	
	24	
	25	
	26	
	27	
	28	
	29	
GPIB INT	30	
+ 5 V	31	+ 5 V
+ 5 V	32	+ 5 V

CODE	ERN	DATE

REVISIONS

	DATE	NAME
CHECK		
DRAWN		

DOLCH LOGIC INSTRUMENTS

GPIB/THRESHOLD BOARD

PART NUMBER: 5 4850 - 08

SHEET 1/2

J 3

Signal	Pin	Pin	Signal
	8	9	
GND	7	10	GPIB INT
	6	11	
	5	12	
	4	13	
	3	14	
	2	15	
	1	16	

J 4

Signal	Pin	Pin	Signal
$\overline{\text{DIO 1}}$	12	13	$\overline{\text{DIO 5}}$
$\overline{\text{DIO 2}}$	11	14	$\overline{\text{DIO 6}}$
$\overline{\text{DIO 3}}$	10	15	$\overline{\text{DIO 7}}$
$\overline{\text{DIO 4}}$	9	16	$\overline{\text{DIO 8}}$
$\overline{\text{EOI}}$	8	17	$\overline{\text{REN}}$
$\overline{\text{DAV}}$	7	18	GND
$\overline{\text{NRFD}}$	6	19	GND
$\overline{\text{NDAC}}$	5	20	GND
$\overline{\text{IFC}}$	4	21	GND
$\overline{\text{SRQ}}$	3	22	GND
$\overline{\text{ATN}}$	2	23	GND
	1	24	GND

J 5

Signal	Pin	Pin	Signal
	8	9	
	7	10	
+5V	6	11	TON
+5V	5	12	ADR 5
+5V	4	13	ADR 4
+5V	3	14	ADR 3
+5V	2	15	ADR 2
+5V	1	16	ADR 1

CODE	ERN	DATE	REVISIONS	NAME	DATE	CHECK	DRAWN

DOLCH LOGIC INSTRUMENTS

GPIB/THRESHOLD BOARD

PART NUMBER: 5 4850 - 08

SHEET: 2/2

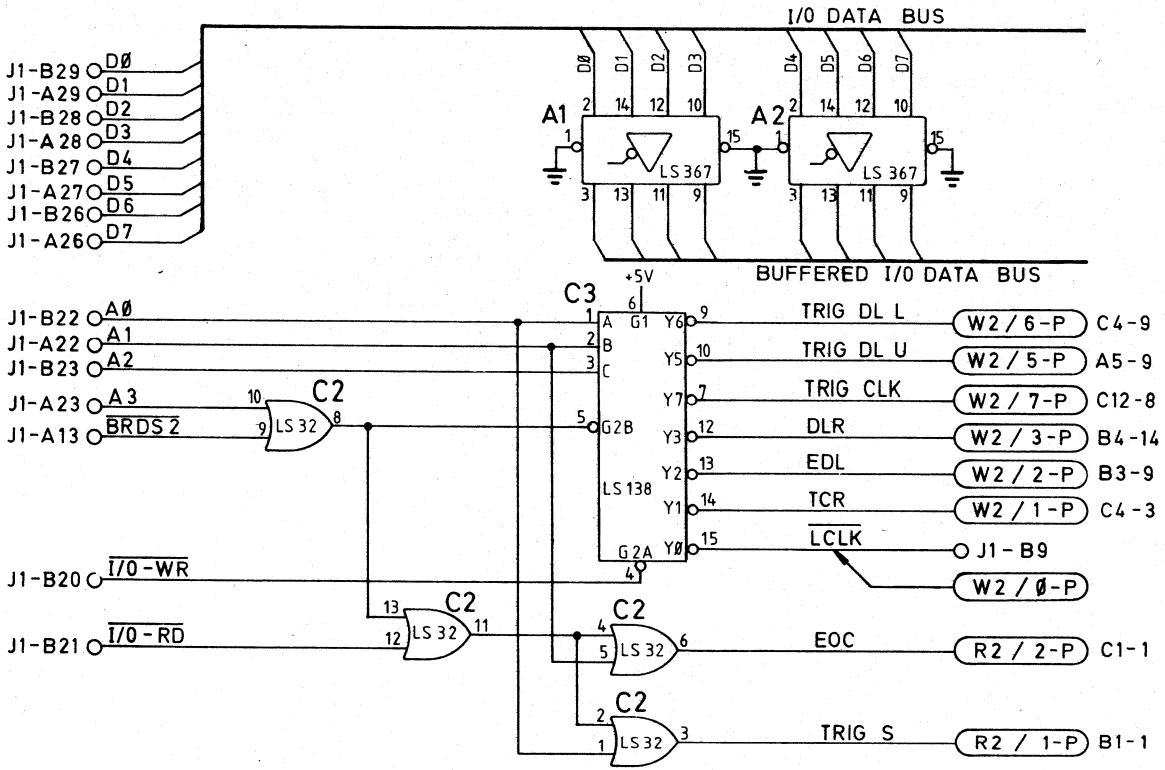

NOTES:

1. SHEET 3 = REVISION G ONLY

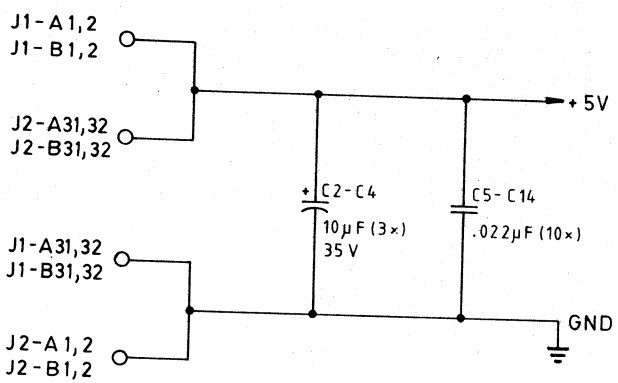

CODE	ERN	DATE	REVISIONS	NAME	DATE
I		10.6.80			
H		6.5.80			

CHECK
DRAWN 6.5.80

DOLCH LOGIC INSTRUMENTS

TRIGGER BOARD

PART NUMBER: 5 4850-10

SHEET: 1 / 3

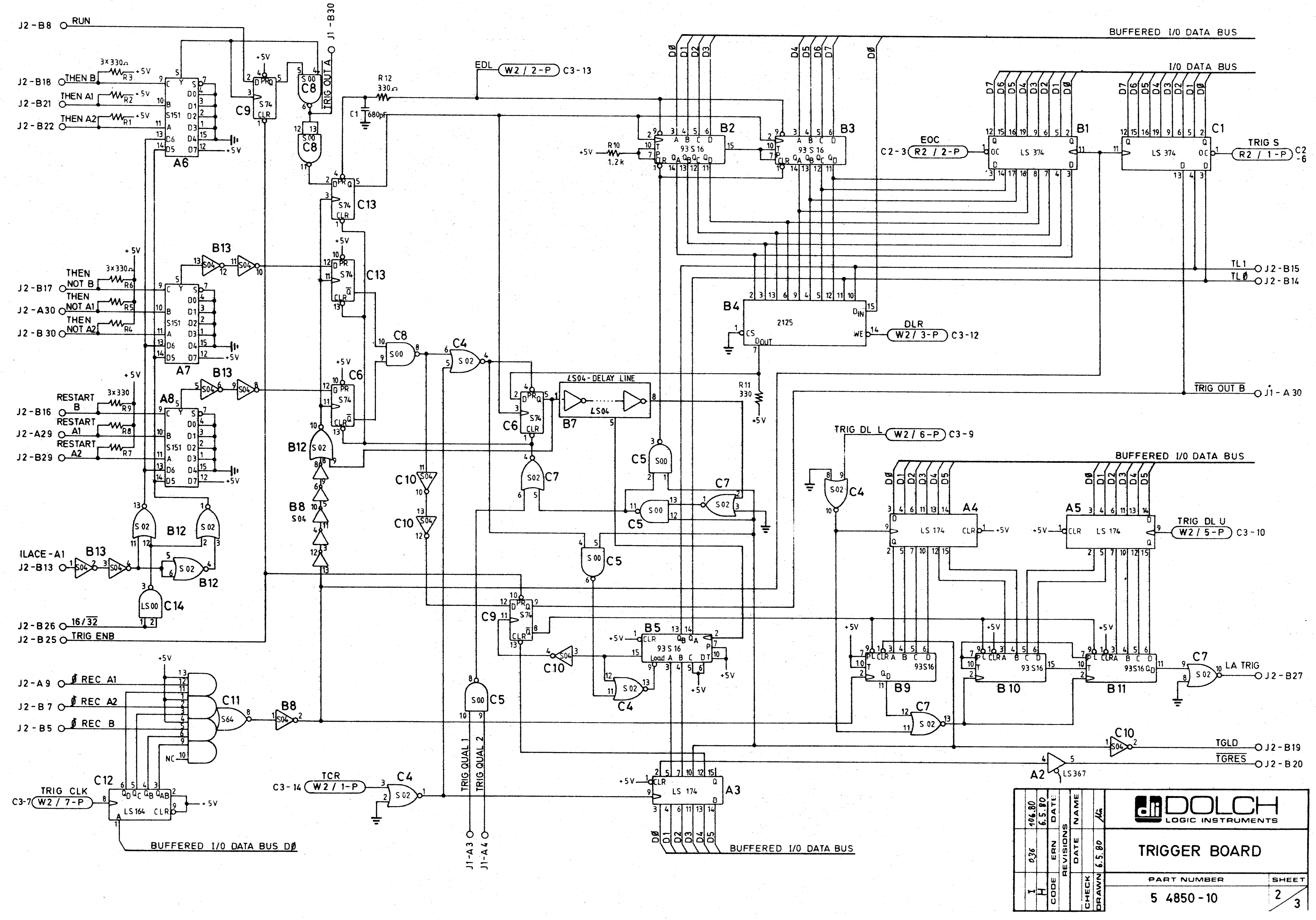
DOLCH
LOGIC INSTRUMENTS
TRIGGER BOARD
PART NUMBER
5 4850-10
SHEET 2/3
DRAWN 6.5.80
CHECK
REVISIONS
CODE ERN DATE NAME
H 6.5.80
I 036 10.6.80
BUFFERED I/O DATA BUS
I/O DATA BUS
BUFFERED I/O DATA BUS DØ
J2-B8 RUN
J2-B18 THEN B
J2-B21 THEN A1
J2-B22 THEN A2
J2-B17 THEN NOT B
J2-A30 THEN NOT A1
J2-B30 THEN NOT A2
J2-B16 RESTART B
J2-A29 RESTART A1
J2-B29 RESTART A2
ILACE-A1 J2-B13
J2-B26 16/32
J2-B25 TRIG ENB
J2-A9 Ø REC A1
J2-B7 Ø REC A2
J2-B5 Ø REC B
C3-7 TRIG CLK W2/7-P
C3-14 TCR W2/1-P
J1-A3 TRIG QUAL 1
J1-A4 TRIG QUAL 2
J1-B30 TRIG OUT A
EDL W2/2-P C3-13
EOC C2-3 R2/2-P
TRIG S R2/1-P C2-6
DLR W2/3-P C3-12
TL1 J2-B15
TLØ J2-B14
TRIG OUT B J1-A30
TRIG DL L W2/6-P C3-9
TRIG DL U W2/5-P C3-10
LA TRIG J2-B27
TGLD J2-B19
TGRES J2-B20
LS04-DELAY LINE
A6 A7 A8 S151
B1 C1 LS 374
B2 B3 B9 B10 B11 B5 93S16
B4 2125
A3 A4 A5 LS 174
C12 LS 164
A2 LS367
R12 330Ω
C1 680pF
R10 1.2k
R11 330
3×330Ω

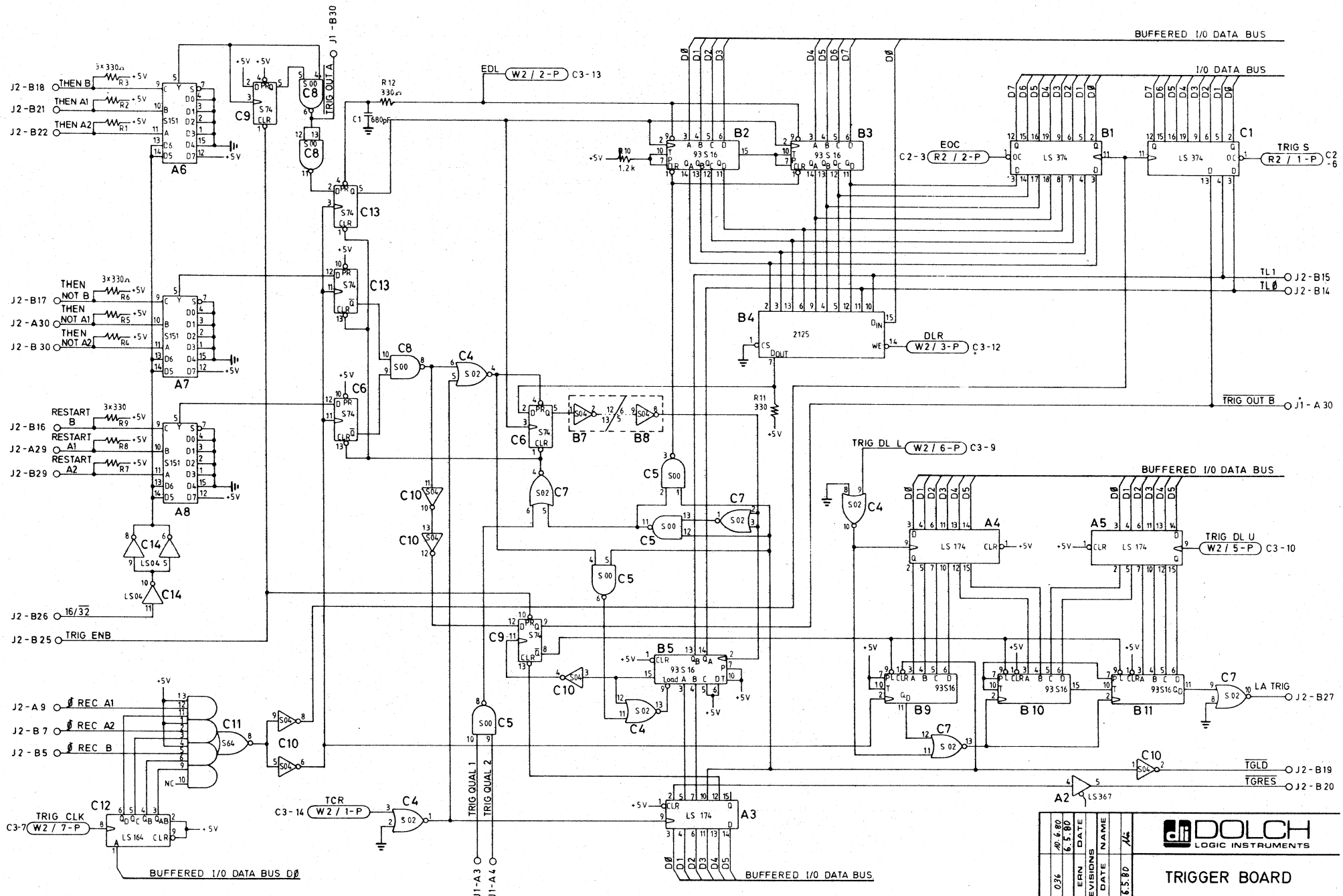
BUFFERED I/O DATA BUS
I/O DATA BUS
J1 - B30
TRIG OUT A
EDL
W2 / 2-P
C3-13
R12
330Ω
C1
680pF
J2-B18
THEN B
J2-B21
THEN A1
J2-B22
THEN A2
3x330Ω
R3
R2
R1
A6
C9
C8
C13
B2
B3
93S16
EOC
C2-3
R2 / 2-P
B1
LS 374
C1
TRIG S
R2 / 1-P
C2-6
TL1
J2-B15
TLØ
J2-B14
J2-B17
THEN NOT B
J2-A30
THEN NOT A1
J2-B30
THEN NOT A2
R6
R5
R4
A7
C6
C4
B4
2125
DLR
W2 / 3-P
C3-12
TRIG OUT B
J1 - A 30
J2-B16
RESTART B
J2-A29
RESTART A1
J2-B29
RESTART A2
3x330
R9
R8
R7
A8
C14
LS04
B7
B8
R11
330
C5
C7
C10
TRIG DL L
W2 / 6-P
C3-9
A4
LS 174
A5
TRIG DL U
W2 / 5-P
C3-10
J2-B26
16/32
J2-B25
TRIG ENB
B5
93S16
B9
B10
B11
LA TRIG
J2-B27
J2-A9
Ø REC A1
J2-B7
Ø REC A2
J2-B5
Ø REC B
C11
S64
NC
TGLD
J2-B19
TGRES
J2-B20
A2
LS367
TRIG CLK
C3-7
W2 / 7-P
C12
LS164
TCR
C3-14
W2 / 1-P
TRIG QUAL 1
TRIG QUAL 2
J1-A3
J1-A4
A3
BUFFERED I/O DATA BUS DØ
BUFFERED I/O DATA BUS
DOLCH
LOGIC INSTRUMENTS
TRIGGER BOARD
PART NUMBER
5 4850-10
SHEET
3/3
REVISIONS
CODE
ERN
DATE
NAME
CHECK
DRAWN
10.6.80
6.5.80
0.36
I
G
6.5.80

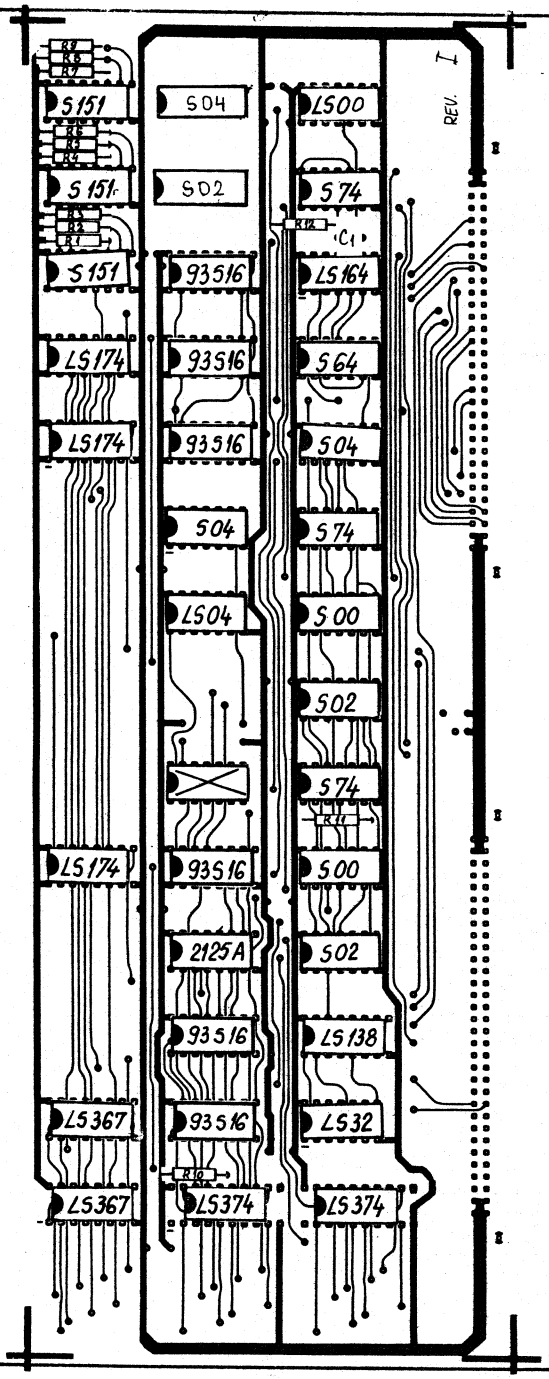

POS.	ITEM	QTY	POS	ITEM	QTY
	LS04	1	C_1	680p	1
	LS32	1		10µF / 35V	3
	LS 138	1		22 n	10
	LS 164	1			
	LS 174	3		14P Sockel	16
	LS 367	2		16P Sockel	16
	LS 374 (Texas Inst.)	2		20P Sockel	2
	S00	2			
	S02	3			
	S04	3			
	S64	1			
	S74	3			
	S 151	3			
	2125A / 2115	1			
	LS 00	1			
	93516 / S 161	6			
R_{1-9}	330 Ω	9			
R_{10}	1K2	1			
$R_{11,12}$	330 Ω	2			

Zust	Änderung	Datum	Name

	Datum	Name
Bearb	23.7.80	Gehrke
Gepr.	19.9.80	Claus
Norm		

5 4850-10

Maßstab LAM 4850

ASS'Y DRAWING - PART LIST

DOLCH LOGIC INSTRUMENTS GMBH

TRIGGER BRD I

Blatt Bl

J1

A		B
+ 5 V	1	+ 5 V
+ 5 V	2	+ 5 V
	3	TRIG QUAL 1
	4	TRIG QUAL 2
	5	CLOCK ON/OFF
	6	
	7	
	8	
	9	
	10	
	11	
	12	
BRDS 2	13	
-12 V	14	-12 V
-12 V	15	-12 V
+12 V	16	+12 V
+12 V	17	+12 V
C7 = MRKLD	18	C6 = CACKN
C5 = CRDY	19	C4 = CHAR RD
C3 = ACKN	20	C2 = I/O - WR
C1 = DATA RDY	21	C0 = I/O - RD
A1	22	A0
A3	23	A2
A5	24	A4
A7	25	A6
D7	26	D6
D5	27	D4
D3	28	D2
D1	29	D0
TRIG OUT B	30	TRIG OUT A
GND	31	GND
GND	32	GND

J2

A		B
GND	1	GND
GND	2	GND
	3	
	4	
	5	Ø REC B
	6	
	7	Ø REC A 2
	8	RUN
Ø REC A 1	9	LCLK
	10	RUN
	11	
	12	
	13	
	14	TL 0
	15	TL 1
	16	RESTART B
	17	THEN NOT B
	18	THEN B
	19	TGLD
	20	TGRES
	21	THEN A 1
	22	THEN A 2
	23	
	24	
	25	TRIG ENB 1
	26	16/32
	27	LA TRIG
	28	
RESTART A 1	29	RESTART A2
THEN NOT A 1	30	THEN NOT A2
+ 5 V	31	+ 5 V
+ 5 V	32	+ 5 V

CODE	ERN	REVISIONS	DATE	NAME
			DATE	
			CHECK	
			DRAWN	

DOLCH LOGIC INSTRUMENTS

TRIGGER BOARD

PART NUMBER	SHEET
5 4850 - 10	1/1

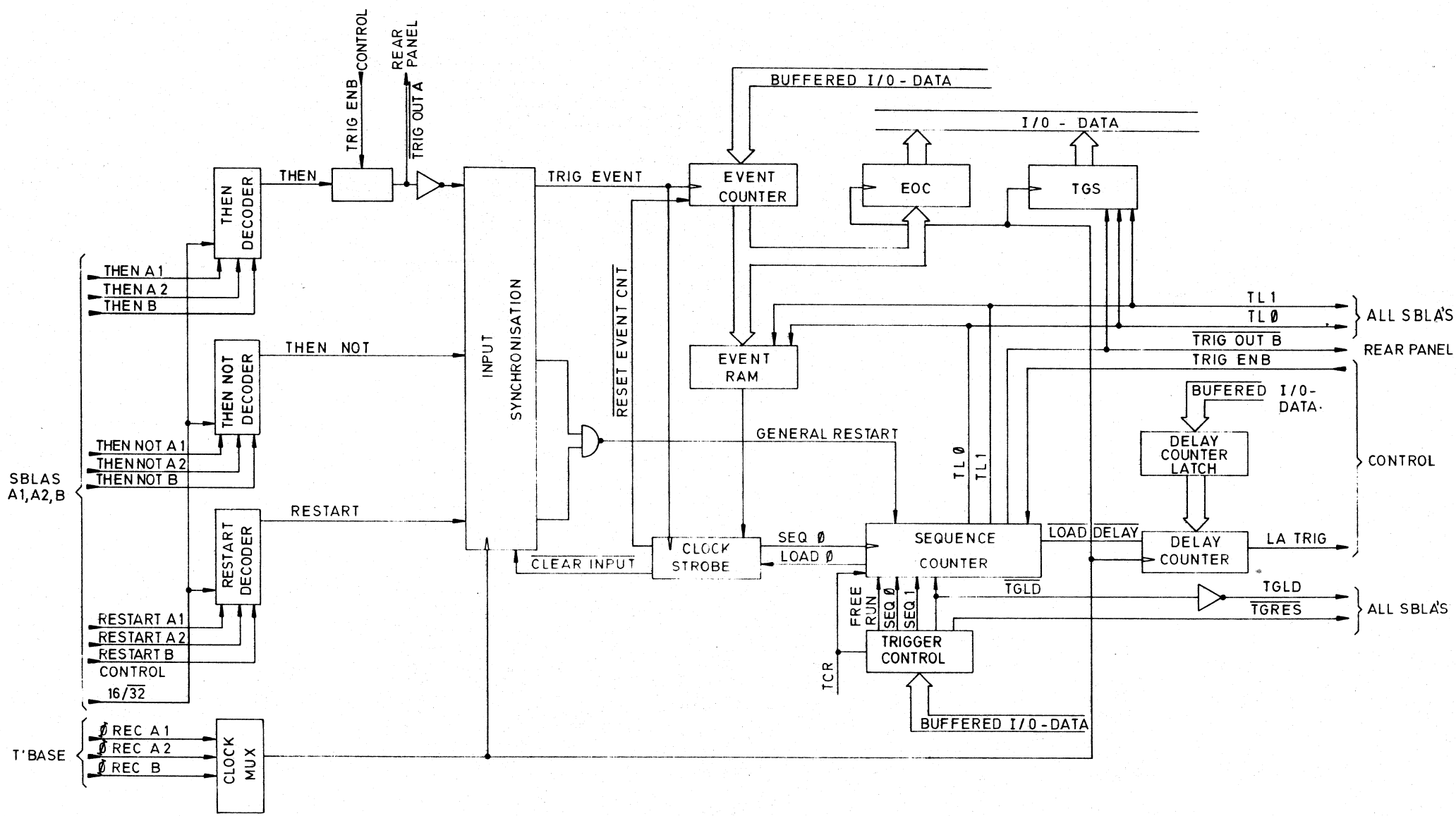

DOLCH LOGIC INSTRUMENTS

TRIGGER BOARD

PART NUMBER	SHEET
5 4850 - 10	1/1

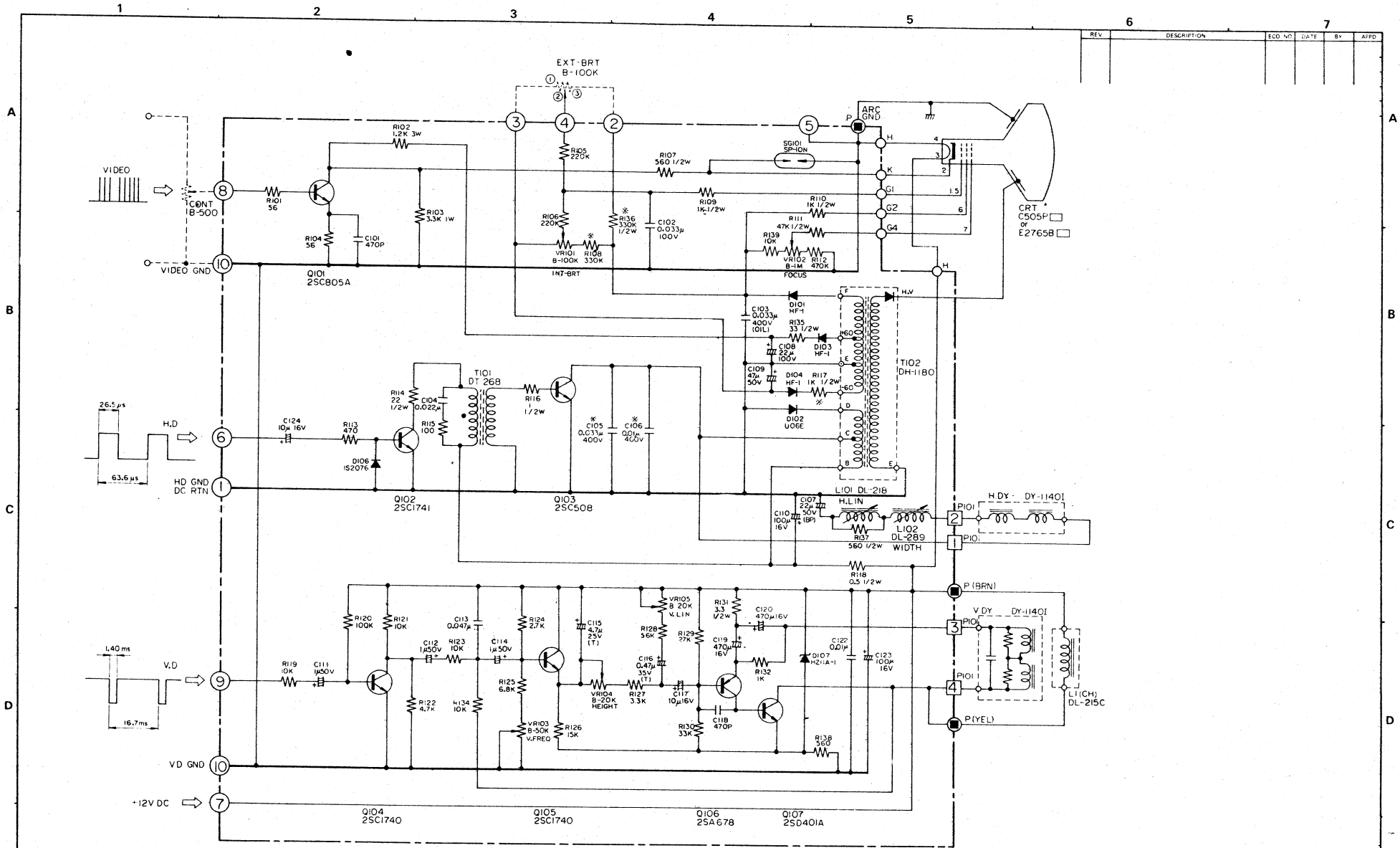

NOTES

1. RESISTORS UNLESS OTHERWISE NOTED ARE 1/4W.
2. CAPACITORS UNLESS OTHERWISE NOTED ARE 50V.
3. ※ADJUSTED

REV	DESCRIPTION	ECO NO	DATE	BY	APPD

MATELIAL	DR	DATE	TITLE	QDM-5C SCHEMATIC DIAGRAM
FINISH	DSGN S. TSURUTA	DATE		
TOLERANCE	CHK	DATE		
SCALE /	APPD	DATE	SIZE A2	SHEET 1 OF 1

ITEM NO.	NO. REQD	PART NAME	DESCRIPTION	SPEC

3Q CHUOMUSEN CO., LTD.

DWG NO. E 2C779-203

REV

761 1,000 ⑤A2 ⑤2213

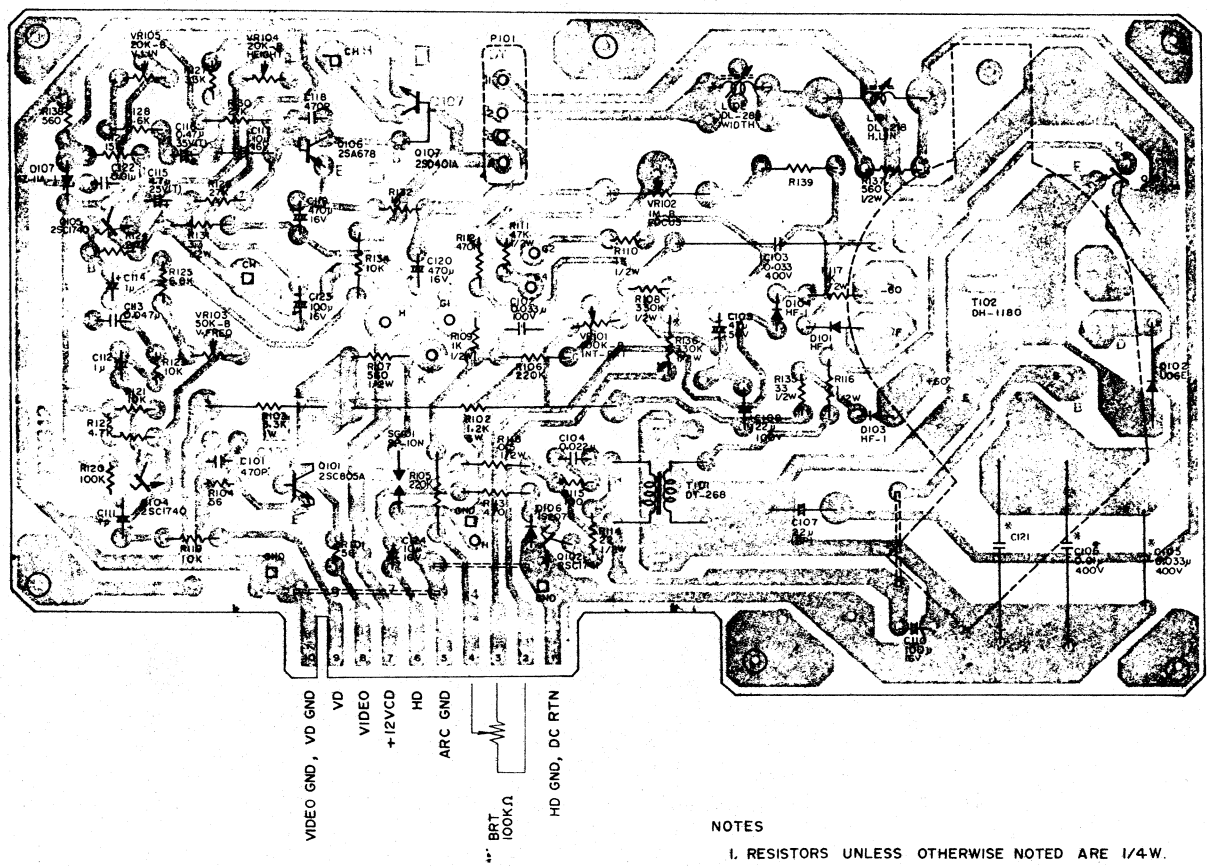

NOTES

1. RESISTORS UNLESS OTHERWISE NOTED ARE 1/4W.
2. CAPACITORS UNLESS OTHERWISE NOTED ARE 50V.
3. ※ ADJUSTED.

MATERIAL		DR	DATE	ITEM NO	NO REQD	PART NAME	DESCRIPTION / SPEC
FINISH		DSGN	DATE	TITLE PB-812 COMPONENTS LOCATION SOLDER SIDE			3Q CHUOMUSEN CO., LTD.
TOLERANCE		CHK	DATE				DWG NO
SCALE 2/1		APD	DATE	SIZE A2	SHEET 1 OF 1		ZK779-504-05-1

5 6 7

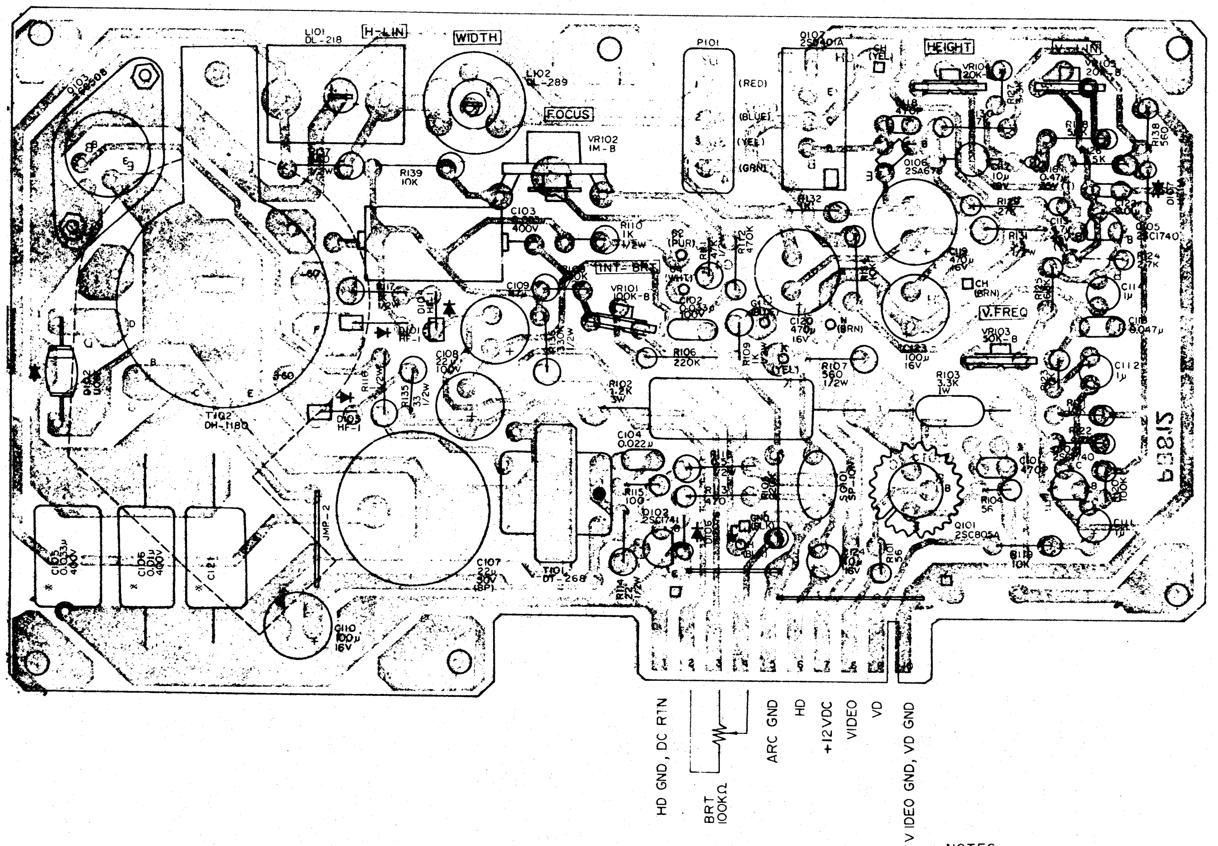

NOTES

1. RESISTORS UNLESS OTHERWISE NOTED ARE 1/4W.
2. CAPACITORS UNLESS OTHERWSE NOTED ARE 50V.
3. ※ ADJUSTED

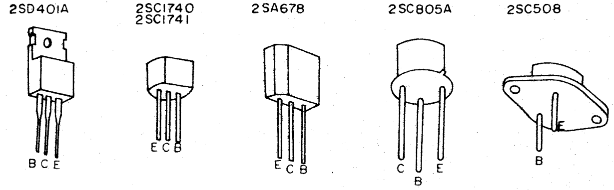

PART NAME	PB – 812	
TITLE	COMPONENTS LOCATION COMPONENTS SIDE	
SIZE	A2	SHEET 1 OF 1
DESCRIPTION	3Q CHUOMUSEN CO., LTD	
DWG NO	2K779-504-05-2	
SCALE	2/1	
DR	S. Hattori	78.11.1
DSGN	S. Tsuruta	78.11.1
CHK		78.11.1
APPD	K. Nagata	78.11.1

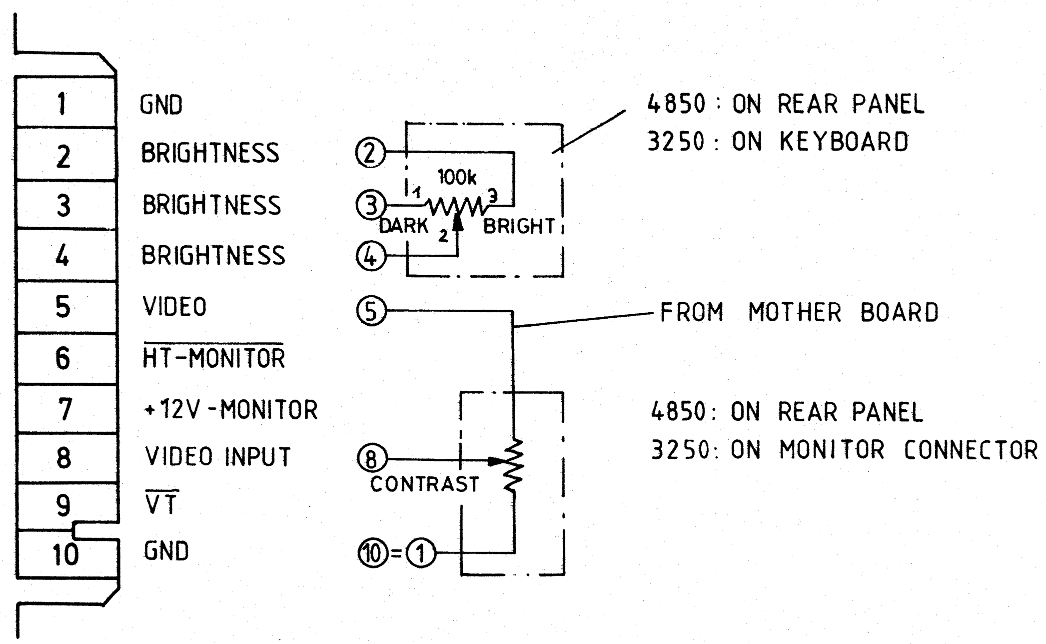

CODE	ERN	DATE

REVISIONS: DATE | NAME

CHECK

DRAWN

DOLCH LOGIC INSTRUMENTS

MONITOR

PART NUMBER	SHEET
5 4850-01	9/9

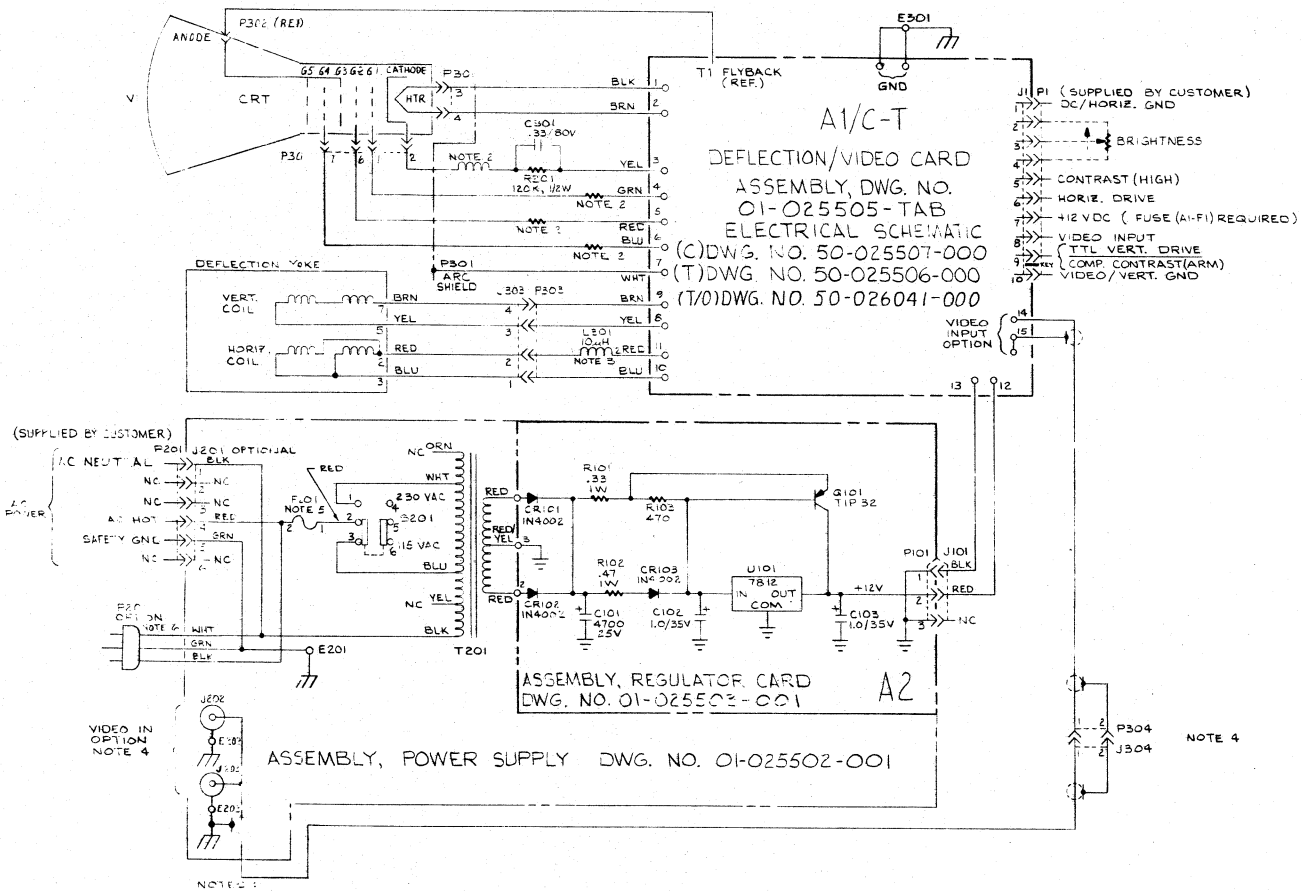

NOTES:

1. UNLESS OTHERWISE SPECIFIED:
   A. FIXED RESISTORS ARE 1/4 WATT.
   B. RESISTANCE VALUES ARE IN OHMS, ±5% TOLERANCE.
   C. CAPACITANCE VALUES ARE IN MICROFARADS.
   D. VOLTAGES ARE D.C.
2. COMPONENTS NOTED ARE SUPPLIED BY MANUFACTURER OF CRT SOCKET (P301).
3. L301 (TM PART NO. P57-002069-002) IS OPTIONAL PER CUSTOMER'S REQUIREMENT.
4. J202, J203 AND P304/J304 ARE OPTIONAL PER CUSTOMER'S REQUIREMENT.
5. FOR 115 VAC LINE, F201 IS 0.3 AMP SLO-BLO. FOR 230 VAC LINE, F201 IS 0.15 AMP SLO-BLO.
6. POWER CORD OPTION REPLACES J201 CONNECTOR.
7. POWER SUPPLY ASSEMBLY (01-025502-001) IS OPTIONAL PER CUSTOMER'S REQUIREMENT. (NOT USED ON BHD-500 AND BHD-700).

—	BHD-700	
—	BHD-500	
—	BHD-900	
—	BHD-1200	
NEXT ASSY.	USED ON	
APPLICATION		

DO NOT SCALE THIS DRAWING
DIMENSION IN INCHES UNLESS OTHERWISE INDICATED
TOLERANCES UNLESS OTHERWISE INDICATED
DECIMALS: .X ± ; .XX ± ; .XXX ± ; FRACTIONS ± ; ANGLES ± ;

DRAWN BY DATE 9-8-79
CHECKED DATE
APPROVED DATE

These materials are and contain confidential and trade secret information of Bell & Howell. Neither they nor the information they contain shall be copied, reproduced, or disclosed to persons not having a need to know for Bell & Howell business purposes or used except for such purposes without prior written permission of Bell & Howell.
© Copyright 1979 Bell & Howell Company. All rights reserved.

TeleMation
A Division of Bell & Howell

INTERCONNECTION DIAGRAM, BHD SERIES MONITOR

SIZE D | REV A | DWG. NO. 51-025500-000
SCALE: NONE | SHEET 1 OF 1

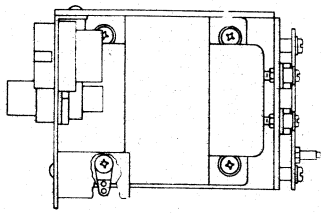

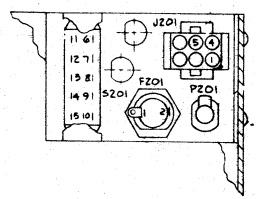

SECTION "A-A"

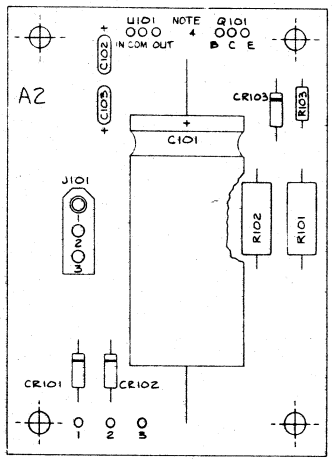

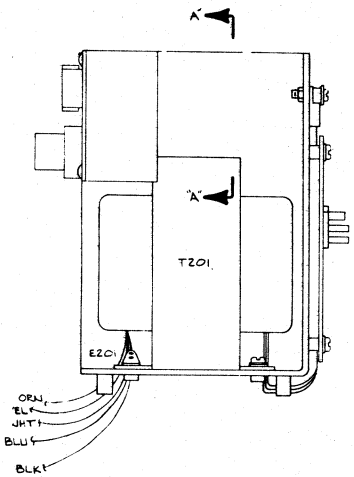

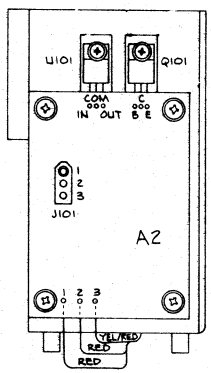

ITEM NO	QTY	DESCRIPTION	PART NO
		LIST OF MATERIALS	

01-025502	BHD-1200
01-025502	BHD-900
NEXT ASSY.	USED ON
APPLICATION	

DO NOT SCALE THIS DRAWING
DIMENSIONS IN INCHES UNLESS OTHERWISE INDICATED
TOLERANCES UNLESS OTHERWISE INDICATED
DECIMALS: X ± XX = ± XXX = ± FRACTIONS = ± ANGLES = ±

DRAWN BY [illegible] DATE 8/14/79
CHECKED [illegible] DATE 21 Sep 79
APPROVED [illegible] DATE 10-5-79

These materials are and contain confidential and trade secret information of Bell & Howell. Neither they nor the information they contain shall be copied, reproduced, or disclosed to persons not having a need to know for Bell & Howell business purposes or used except for such purposes without prior written permission of Bell & Howell.
© Copyright 1979 Bell & Howell Company. All rights reserved.

TeleMation
A Division of Bell & Howell

ASSEMBLY, REGULATOR CARD

SIZE C | REV. – | DWG. NO. 01-025503-001
SCALE: 2/1 | SHEET 1 OF 1

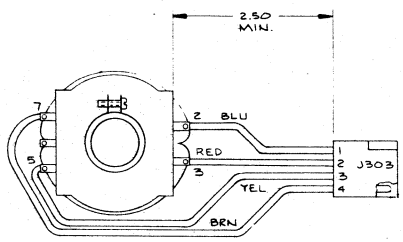

01-025357	BHD-1200
01-026225	BHD-1200-19
01-025355-003	BHD-911
01-025357-003	BHD-1211
01-025556	BHD-900
NEXT ASSY.	USED ON
APPLICATION	

DO NOT SCALE THIS DRAWING
DIMENSION IN INCHES UNLESS OTHERWISE INDICATED
TOLERANCES UNLESS OTHERWISE INDICATED
DECIMALS: X = ± XX = ± XXX = ± FRACTIONS = ± ANGLES = ±

DRAWN BY [illegible] DATE 1/10/80
CHECKED [illegible] DATE 1/14/80
APPROVED [illegible] DATE 1/14/80

These materials are and contain confidential and trade secret information of Bell & Howell. Neither they nor the information they contain shall be copied, reproduced, or disclosed to persons not having a need to know for Bell & Howell business purposes or used except for such purposes without prior written permission of Bell & Howell.
© Copyright 1980 Bell & Howell Company. All rights reserved.

TeleMation
A Division of Bell & Howell

ASSEMBLY, POWER SUPPLY

SIZE D | REV A | DWG. NO. 01-026028-TAB
SCALE: 1/1 | SHEET 1 OF 1

PART NO.	DESCRIPTION	REV LTR	ECO NO.	INC. BY	DATE	APPROVED
01-026028-005	POWER CORD	–				
01-026028-004	6 PIN CONN	–				
01-026028-003	ENCLOSED	–				
01-026028-002	POWER CORD	A	6515-2	RDT	3/6/80	[illegible]
01-026028-001	6 PIN CONN.	A	6515-1	RDT	3/6/80	[illegible]

TABULATION — REVISION STATUS

ITEM NO	QTY	DESCRIPTION	PART NO
		LIST OF MATERIALS	

01-025815	BHD-700
01-025514	BHD-1200
01-025515	BHD-900
01-025516	BHD-500
NEXT ASSY.	USED ON
APPLICATION	

DO NOT SCALE THIS DRAWING
DIMENSIONS IN INCHES UNLESS OTHERWISE INDICATED
TOLERANCES UNLESS OTHERWISE INDICATED
DECIMALS: X ± XX = ± XXX = ± FRACTIONS = ± ANGLES = ±

DRAWN BY [illegible] DATE 8/17/79
CHECKED [illegible] DATE 21 Sep 79
APPROVED [illegible] DATE 11-11-79

These materials are and contain confidential and trade secret information of Bell & Howell. Neither they nor the information they contain shall be copied, reproduced, or disclosed to persons not having a need to know for Bell & Howell business purposes or used except for such purposes without prior written permission of Bell & Howell.
© Copyright 1979 Bell & Howell Company. All rights reserved.

TeleMation
A Division of Bell & Howell

ASSEMBLY, DEFLECTION YOKE

SIZE C | REV. – | DWG NO. 01-025517-001
SCALE: 1/1 | SHEET 1 OF 1

REVISIONS			
LETTER	DESCRIPTION	DATE	APPROVED
—	RELEASED TO PRODUCTION		
A	INCORPORATED ECO NO. 6517-4	2/28/80	
B	INCORPORATED ECO NO. 6523-4	2/28/80	

A1/C ASSEMBLY, DEFLECTION/VIDEO CARD (COMPOSITE)
DWG. NO. 01-025505-001

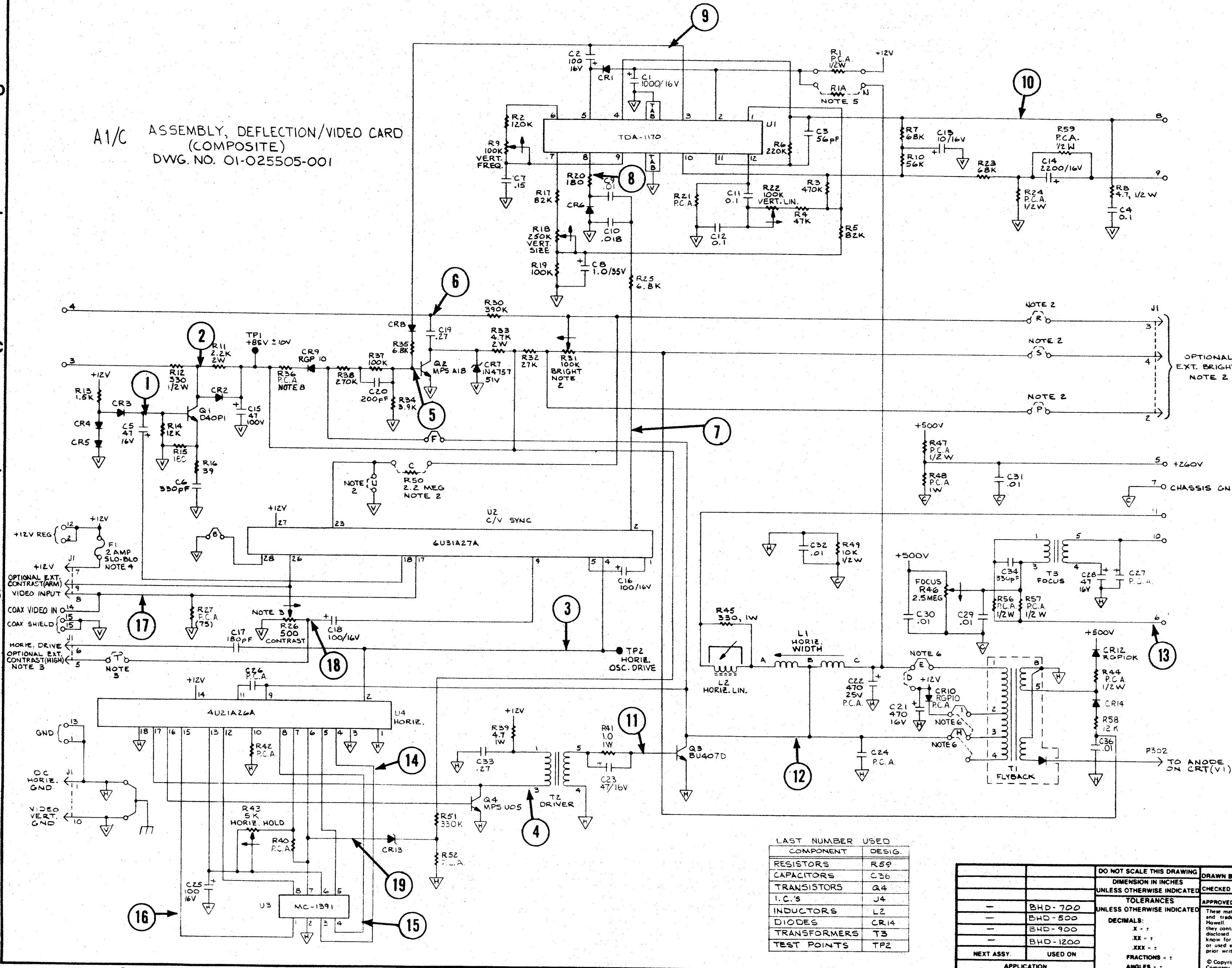

NOTES:

1. UNLESS OTHERWISE SPECIFIED:
   A. FIXED RESISTORS ARE 1/4 WATT.
   B. RESISTANCE VALUES ARE IN OHMS, ±5% TOL.
   C. CAPACITANCE VALUES ARE IN MICROFARADS.
   D. VOLTAGES ARE D.C.
   E. DIODES ARE IN4148.
2. FOR OPTIONAL EXTERNAL BRIGHTNESS CONTROL (SUPPLIED BY CUSTOMER THRU P1 CONNECTOR); OMIT BRIGHT POT (R31), INSTALL 2.2 MEG RESISTOR (R50), AND INSTALL JUMPERS AS INDICATED BY DASHED LINES.
3. FOR OPTIONAL EXTERNAL CONTRAST CONTROL (SUPPLIED BY CUSTOMER THRU P1 CONNECTOR): OMIT CONTRAST POT (R26), AND INSTALL JUMPER AS INDICATED BY DASHED LINE.
4. FOR OPTIONAL EXTERNAL +12VDC POWER (SUPPLIED BY CUSTOMER THRU P1 CONNECTOR): INSTALL 2 AMP SLO-BLO FUSE (F1).
5. OPTIONAL LOCATION FOR R1 (1/4 WATT), INSTALLED BY FACTORY WHEN REQUIRED.
6. JUMPERS SET BY FACTORY AS REQUIRED.
7. P.C.A. — PER CUSTOMER APPLICATION
8. FOR 9" AND 12" MONITORS USE 1 WATT RESISTOR (R36). FOR 5" AND 7" MONITORS USE 1/2 WATT RESISTOR (R36).

LAST NUMBER USED	
COMPONENT	DESIG.
RESISTORS	R59
CAPACITORS	C36
TRANSISTORS	Q4
I.C.'S	J4
INDUCTORS	L2
DIODES	CR14
TRANSFORMERS	T3
TEST POINTS	TP2

NEXT ASSY.	USED ON
—	BHD-700
—	BHD-500
—	BHD-900
—	BHD-1200

APPLICATION

DO NOT SCALE THIS DRAWING
DIMENSION IN INCHES UNLESS OTHERWISE INDICATED
TOLERANCES UNLESS OTHERWISE INDICATED
DECIMALS: .X = ± .XX = ± .XXX = ±
FRACTIONS = ±
ANGLES = ±

DRAWN BY [signature] DATE 8-25-79
CHECKED [signature] DATE 20 Sep 79
APPROVED [signature] DATE

These materials are and contain confidential and trade secret information of Bell & Howell. Neither they nor the information they contain shall be copied, reproduced, or disclosed to persons not having a need to know for Bell & Howell business purposes or used except for such purposes without prior written permission of Bell & Howell.

© Copyright 1979 Bell & Howell Company. All rights reserved.

TeleMation A Division of Bell & Howell

ELECTRICAL SCHEMATIC, DEFLECTION/VIDEO CARD (COMPOSITE) A1/C

SIZE D | REV. 3 | DWG. NO. 50-025507-000
SCALE: NONE | SHEET 1 OF 1

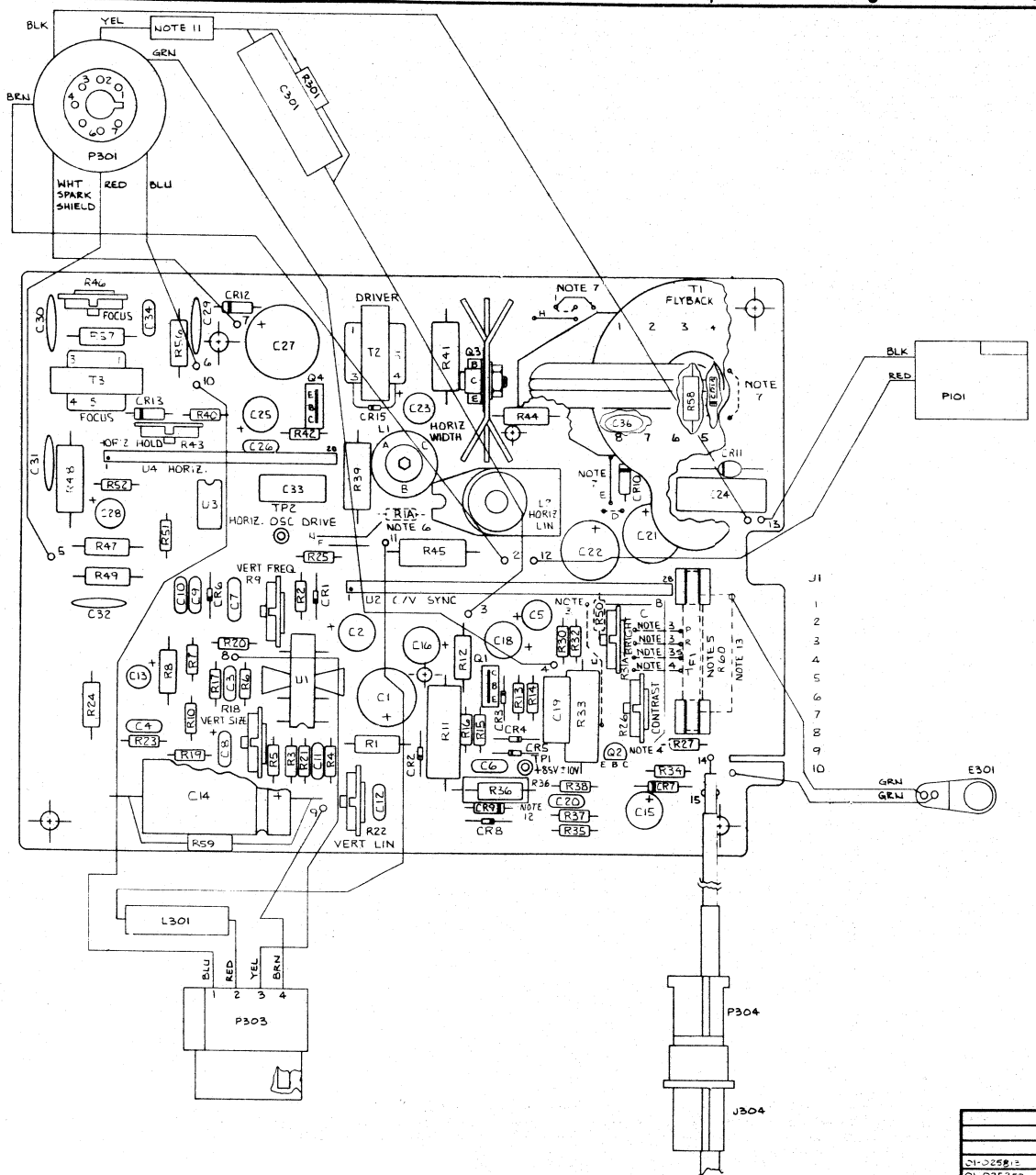

REVISIONS			
LETTER	DESCRIPTION	DATE	APPROVED
—	RELEASED TO PRODUCTION		
A	INCORPORATED ECO NO. 6512	2/19/80	
B	INCORPORATED ECO NO. 6517	2/25/80	
C	INCORPORATED ECO NO. 6523	3/3/80	
D	INCORPORATED ECO NO. 6544	[illegible]	
E	INCORPORATED ECO NO. 6548	[illegible]	
F	INCORPORATED ECO. 6562-1	5/7/80	
G	INCORPORATED ECO NO. 6563	5/7/80	
H	INCORPORATED ECO NO. 6565	5/8/80	

NOTES:

1. LIST OF MATERIALS: LM01-025505-001.
2. ELECTRICAL SCHEMATIC: 50-025507-000.
3. FOR OPTIONAL EXTERNAL BRIGHTNESS CONTROL (SUPPLIED BY CUSTOMER THRU P1 CONNECTOR); OMIT BRIGHT POT (R31A), INSTALL 2.2 MEGΩ 1/4 WATT RESISTOR (R50), AND INSTALL JUMPERS AS INDICATED BY DASHED LINES.
4. FOR OPTIONAL EXTERNAL CONTRAST CONTROL (SUPPLIED BY CUSTOMER THRU P1 CONNECTOR); OMIT CONTRAST POT (R26), AND INSTALL JUMPER AS INDICATED BY DASHED LINE.
5. FOR OPTIONAL EXTERNAL +12VDC POWER (SUPPLIED BY CUSTOMER THRU P1 CONNECTOR); INSTALL 2 AMP SLO-BLO FUSE (F1).
6. OPTIONAL LOCATION FOR RESISTOR (1/4 WATT) INSTALLED BY FACTORY WHEN REQUIRED.
7. JUMPERS INSTALLED BY FACTORY AS REQUIRED.

11. THIS IN LINE COMPONENT, (PART OF ITEMS NO. 34 AND 35), MAY BE RELOCATED, IN LINE, TO FACILITATE ADDITIONAL COMPONENT INSTALLATION.
12. FOR 9" AND 12" MONITORS USE 1 WATT RESISTOR (R36), FOR 5" AND 7" MONITORS USE 1/2 WATT RESISTOR (R36).
13. RESISTOR R60 SHALL BE USED IN PLACE OF F1 FOR 15VDC OPERATION.

01-025813	BHD-700
01-025352	BHD-500
01-025356	BHD-900
01-025357	BHD-1200
NEXT ASSY	USED ON
APPLICATION	

DO NOT SCALE THIS DRAWING
DIMENSION IN INCHES UNLESS OTHERWISE INDICATED
TOLERANCES UNLESS OTHERWISE INDICATED
DECIMALS:
X - :
XX - :
XXX - :
FRACTIONS - :
ANGLES - :

DRAWN BY [illegible] DATE 2-28-79
CHECKED [illegible] DATE [illegible]
APPROVED [illegible] DATE [illegible]

These materials are and contain confidential and trade secret information of Bell & Howell. Neither they nor the information they contain shall be copied, reproduced or disclosed to persons not having a need to know for Bell & Howell business purposes or used except for such purposes without prior written permission of Bell & Howell.

© Copyright 1979 Bell & Howell Company. All rights reserved.

TeleMation
A Division of Bell & Howell

ASSEMBLY, DEFLECTION / VIDEO CARD (COMPOSITE) A1/C

SIZE D | REV. H | DWG NO 01-025505-001

SCALE 2/1 | SHEET 1 OF 2

A1/T

ASSEMBLY, DEFLECTION/VIDEO CARD (TTL)

DWG. NO. 01-025505-002

REVISIONS			
LETTER	DESCRIPTION	DATE	APPROVED
—	RELEASED TO PRODUCTION		
A	INCORPORATED ECO NO. 6517-3	2/28/80	
B	INCORPORATED ECO NO. 6523-3	2/28/80	

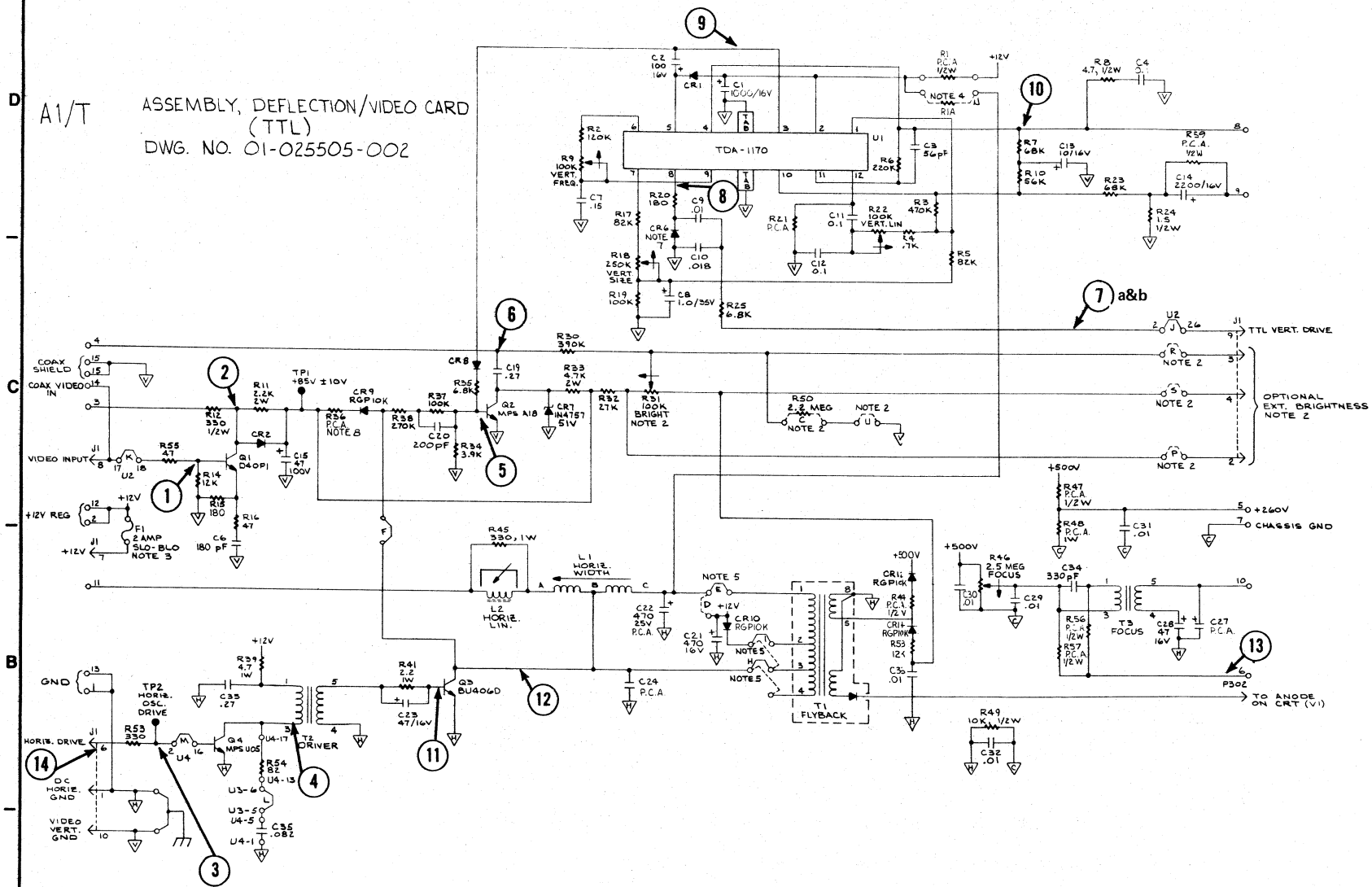

NOTES:

1. UNLESS OTHERWISE SPECIFIED:
   A. FIXED RESISTORS ARE 1/4 WATT.
   B. RESISTANCE VALUES ARE IN OHMS, ±5% TOL.
   C. CAPACITANCE VALUES ARE IN MICROFARADS.
   D. VOLTAGES ARE D.C.
   E. DIODES ARE IN4148.
2. FOR OPTIONAL EXTERNAL BRIGHTNESS CONTROL (SUPPLIED BY CUSTOMER THRU P1 CONNECTOR); OMIT BRIGHT POT (R31), INSTALL 2.2 MEG RESISTOR (R50), AND INSTALL JUMPERS AS INDICATED BY DASHED LINES.
3. FOR OPTIONAL EXTERNAL +12VDC POWER (SUPPLIED BY CUSTOMER THRU P1 CONNECTOR); INSTALL 2 AMP SLO-BLO FUSE (F1).
4. OPTIONAL LOCATION FOR R1 (1/4 WATT). INSTALLED BY FACTORY WHEN REQUIRED.
5. JUMPERS SET BY FACTORY AS REQUIRED.
6. P.C.A. - PER CUSTOMER APPLICATIONS
7. DIODE CR9 AS SHOWN IS USED FOR POSITIVE VERTICAL SYNC. REVERSE POLARITY OF CR9 FOR NEGATIVE VERTICAL SYNC.
8. FOR 9" AND 12" MONITORS USE 1 WATT RESISTOR (R36). FOR 5" AND 7" MONITORS USE 1/2 WATT RESISTOR (R36).

LAST NUMBER USED	
COMPONENT	DESIG.
RESISTORS	R59
CAPACITORS	C36
TRANSISTORS	Q4
I.C.'s	U4
INDUCTORS	L2
DIODES	CR14
TRANSFORMERS	T3
TEST POINTS	TP2

NEXT ASSY	USED ON
—	BHD-700
—	BHD-500
—	BHD-900
—	BHD-1200
APPLICATION	

DO NOT SCALE THIS DRAWING
DIMENSION IN INCHES UNLESS OTHERWISE INDICATED
TOLERANCES UNLESS OTHERWISE INDICATED
DECIMALS: .X ± ; .XX ± ; .XXX ± ; FRACTIONS ± ; ANGLES ± ;

DRAWN BY DATE
CHECKED DATE
APPROVED DATE

These materials are and contain confidential and trade secret information of Bell & Howell. Neither they nor the information they contain shall be copied, reproduced, or disclosed to persons not having a need to know for Bell & Howell business purposes or used except for such purposes without prior written permission of Bell & Howell.
© Copyright 1979 Bell & Howell Company. All rights reserved.

TeleMation
A Division of Bell & Howell

ELECTRICAL SCHEMATIC, DEFLECTION/VIDEO CARD (TTL) A1/T

SIZE D | REV B | DWG NO 50-025506-000

SCALE NONE | SHEET OF

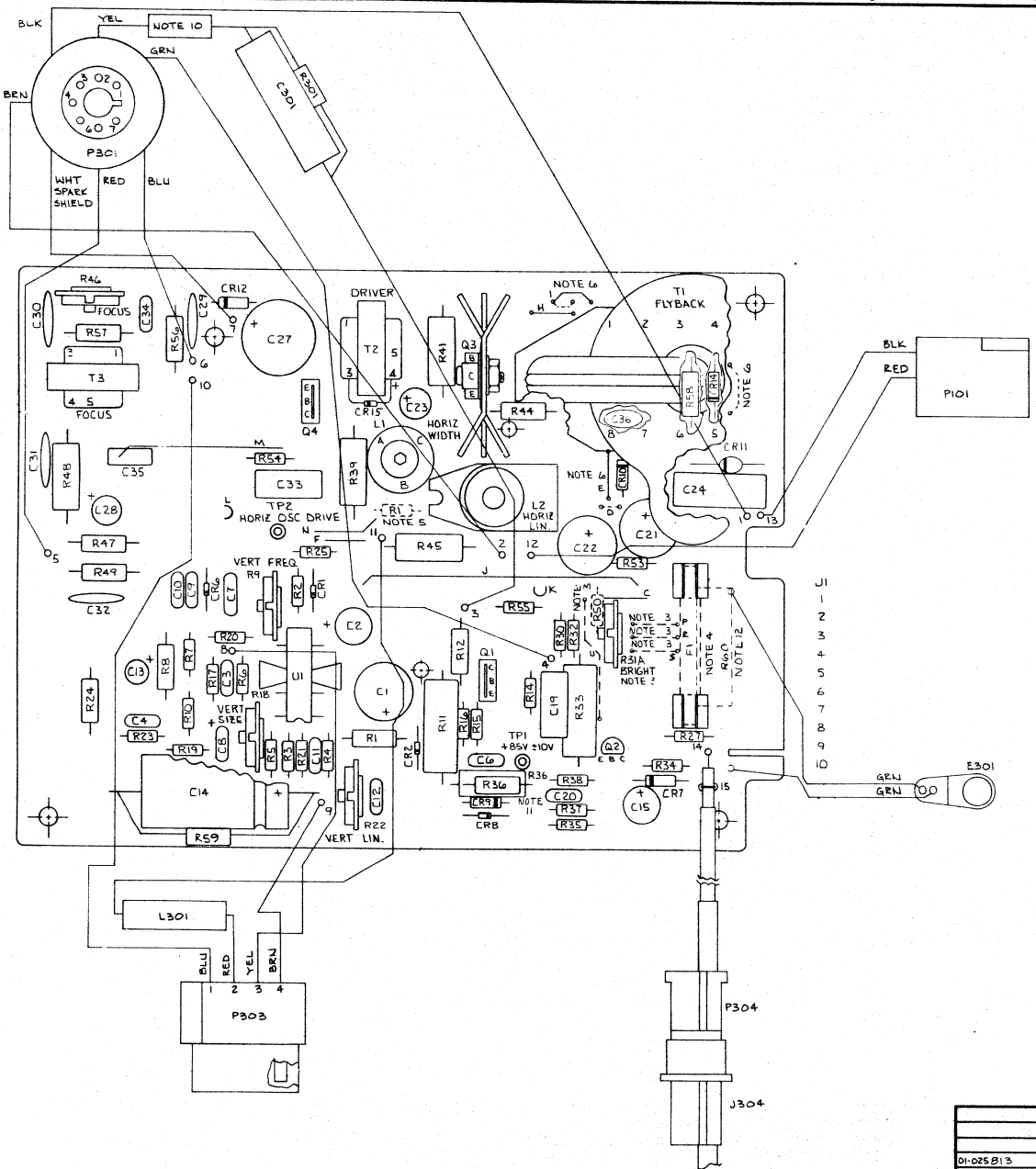

REVISIONS			
LETTER	DESCRIPTION	DATE	APPROVED
—	RELEASED TO PRODUCTION		
A	INCORPORATED ECO NO. 6512-1	2/19/80	
B	INCORPORATED ECO NO. 6517-1	2/28/80	
C	INCORPORATED ECO NO. 6523-1	[illegible]	
D	INCORPORATED ECO NO. 6544-1	4/5/80	
E	INCORPORATED ECO NO. 6548-1	4/14/80	
F	INCORPORATED ECO NO. 6562-1	5/6/80	
G	INCORPORATED ECO NO. 6563-1	5/8/80	
H	INCORPORATED ECO NO. 6565-1	5/14/80	

NOTES:

1. LIST OF MATERIALS: LM01-025505-002
2. ELECTRICAL SCHEMATIC: 50-025506-000.
3. FOR OPTIONAL EXTERNAL BRIGHTNESS CONTROL (SUPPLIED BY CUSTOMER THRU P1 CONNECTOR); OMIT BRIGHT POT (R31A), INSTALL 2.2 MEGΩ ¼ WATT RESISTOR (R50), AND INSTALL JUMPERS AS INDICATED BY DASHED LINES.
4. FOR OPTIONAL EXTERNAL +12VDC POWER (SUPPLIED BY CUSTOMER THRU P1 CONNECTOR); INSTALL 2 AMP SLO-BLO FUSE (F1).
5. OPTIONAL LOCATION FOR RESISTOR R[illegible] (¼ WATT) INSTALLED BY FACTORY WHEN REQUIRED.
6. JUMPERS INSTALLED BY FACTORY AS REQUIRED.
7. USE SOLDER, ROSIN CORE, ITEM NO. [illegible] FOR ALL SOLDERED CONNECTIONS.
8. TAG WITH PART NO. AND REVISION LETTER.
9. PICK LIST OF MATERIALS: PL01-025505-XXX.
10. THIS IN LINE COMPONENT, (PART OF ITEMS NO. 34 AND 33), MAY BE RELOCATED, IN LINE, TO FACILITATE ADDITIONAL COMPONENT INSTALLATION.
11. FOR 9" AND 12" MONITORS USE 1 WATT RESISTOR (R36), FOR 5" AND 7" MONITORS USE ½ WATT RESISTOR (R36).
12. RESISTOR R60 SHALL BE USED IN PLACE OF F1 FOR 15VDC OPERATION.

01-025813	BHD-700
01-025852	BHD-500
01-025856	BHD-900
01-025857	BHD-1200
NEXT ASSY	USED ON
APPLICATION	

DO NOT SCALE THIS DRAWING
DIMENSION IN INCHES UNLESS OTHERWISE INDICATED
TOLERANCES UNLESS OTHERWISE INDICATED
DECIMALS: .X ± .XX ± .XXX ± FRACTIONS ± ANGLES ± °

DRAWN BY [illegible] DATE 9-23-79
CHECKED [illegible] DATE [illegible]
APPROVED [illegible] DATE [illegible]

These materials are and contain confidential and trade secret information of Bell & Howell. Neither they nor the information they contain shall be copied, reproduced, or disclosed to persons not having a need to know for Bell & Howell business purposes or used except for such purposes without prior written permission of Bell & Howell.

© Copyright 1979 Bell & Howell Company. All rights reserved.

TeleMation
A Division of Bell & Howell

ASSEMBLY
DEFLECTION/VIDEO CARD
(TTL) A1/T

SIZE D | REV. — | DWG NO 01-025505-002

SCALE 2/1 | SHEET 2 OF 4

A1/T/C ASSEMBLY, DEFLECTION/VIDEO CARD
(TTL/CSC)
DWG. NO. 01-025505-003

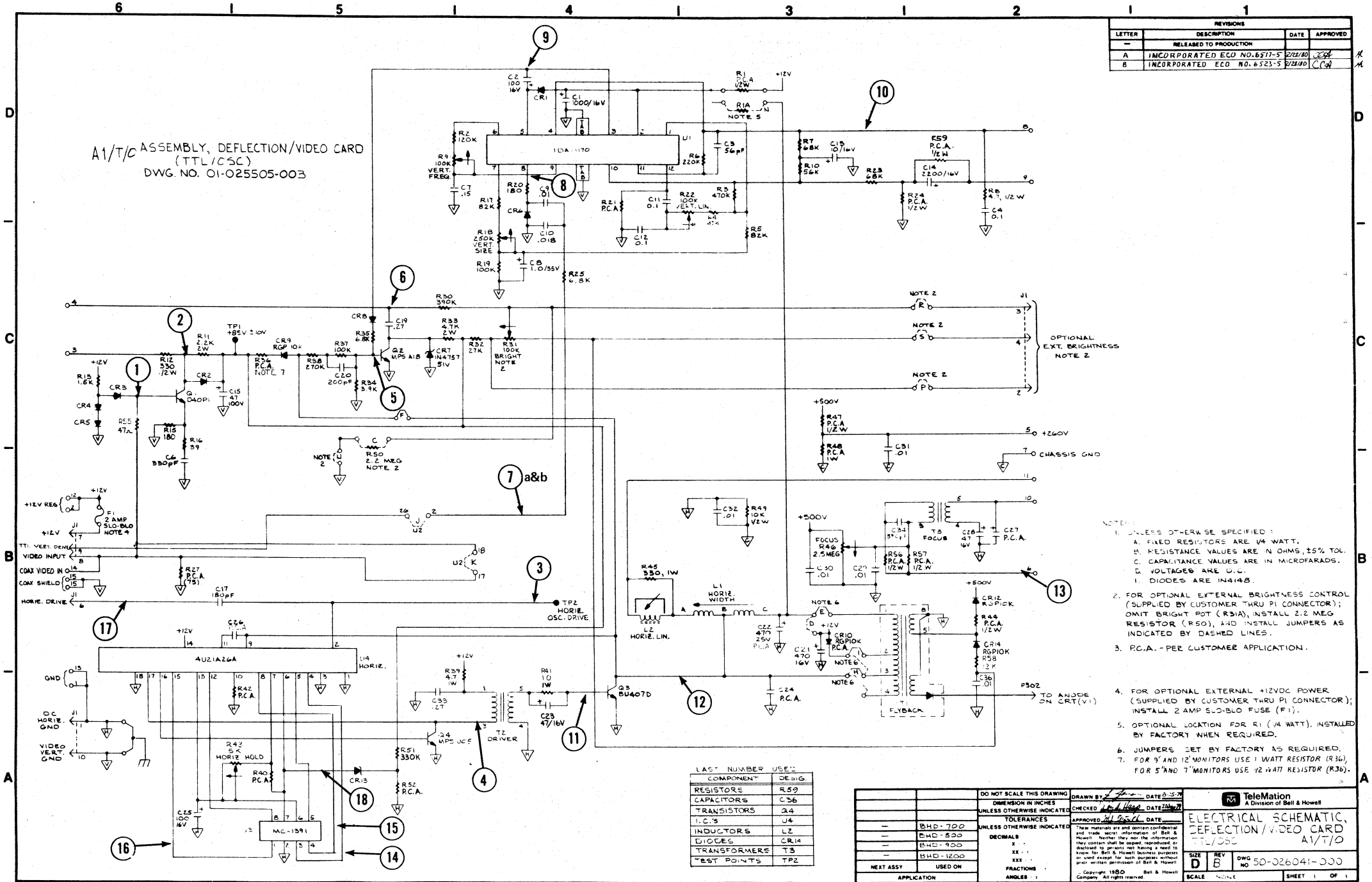

REVISIONS			
LETTER	DESCRIPTION	DATE	APPROVED
—	RELEASED TO PRODUCTION		
A	INCORPORATED ECO NO. 6517-5	2/23/80	
B	INCORPORATED ECO NO. 6523-5	2/28/80	

NOTES:
1. UNLESS OTHERWISE SPECIFIED:
   A. FIXED RESISTORS ARE 1/4 WATT.
   B. RESISTANCE VALUES ARE IN OHMS, ±5% TOL.
   C. CAPACITANCE VALUES ARE IN MICROFARADS.
   D. VOLTAGES ARE D.C.
   E. DIODES ARE IN4148.
2. FOR OPTIONAL EXTERNAL BRIGHTNESS CONTROL (SUPPLIED BY CUSTOMER THRU P1 CONNECTOR); OMIT BRIGHT POT (R31A), INSTALL 2.2 MEG RESISTOR (R50), AND INSTALL JUMPERS AS INDICATED BY DASHED LINES.
3. P.C.A. - PER CUSTOMER APPLICATION.
4. FOR OPTIONAL EXTERNAL +12VDC POWER (SUPPLIED BY CUSTOMER THRU P1 CONNECTOR); INSTALL 2 AMP SLO-BLO FUSE (F1).
5. OPTIONAL LOCATION FOR R1 (1/4 WATT). INSTALLED BY FACTORY WHEN REQUIRED.
6. JUMPERS SET BY FACTORY AS REQUIRED.
7. FOR 9" AND 12" MONITORS USE 1 WATT RESISTOR (R36), FOR 5" AND 7" MONITORS USE 1/2 WATT RESISTOR (R36).

LAST NUMBER USED	
COMPONENT	DESIG.
RESISTORS	R59
CAPACITORS	C36
TRANSISTORS	Q4
I.C.'S	U4
INDUCTORS	L2
DIODES	CR14
TRANSFORMERS	T3
TEST POINTS	TP2

NEXT ASSY	USED ON
—	BHD-700
—	BHD-500
—	BHD-900
—	BHD-1200
APPLICATION	

DO NOT SCALE THIS DRAWING
DIMENSION IN INCHES UNLESS OTHERWISE INDICATED
TOLERANCES UNLESS OTHERWISE INDICATED
DECIMALS
X ±
XX ±
XXX ±
FRACTIONS ±
ANGLES ±

DRAWN BY DATE 8-5-79
CHECKED DATE
APPROVED DATE

These materials are and contain confidential and trade secret information of Bell & Howell. Neither they nor the information they contain shall be copied, reproduced or disclosed to persons not having a need to know for Bell & Howell business purposes or used except for such purposes without prior written permission of Bell & Howell.
© Copyright 1980 Bell & Howell Company. All rights reserved.

TeleMation
A Division of Bell & Howell

ELECTRICAL SCHEMATIC, DEFLECTION/VIDEO CARD
TTL/CSC A1/T/C

SIZE D | REV B | DWG NO 50-026041-000
SCALE NONE | SHEET 1 OF 1

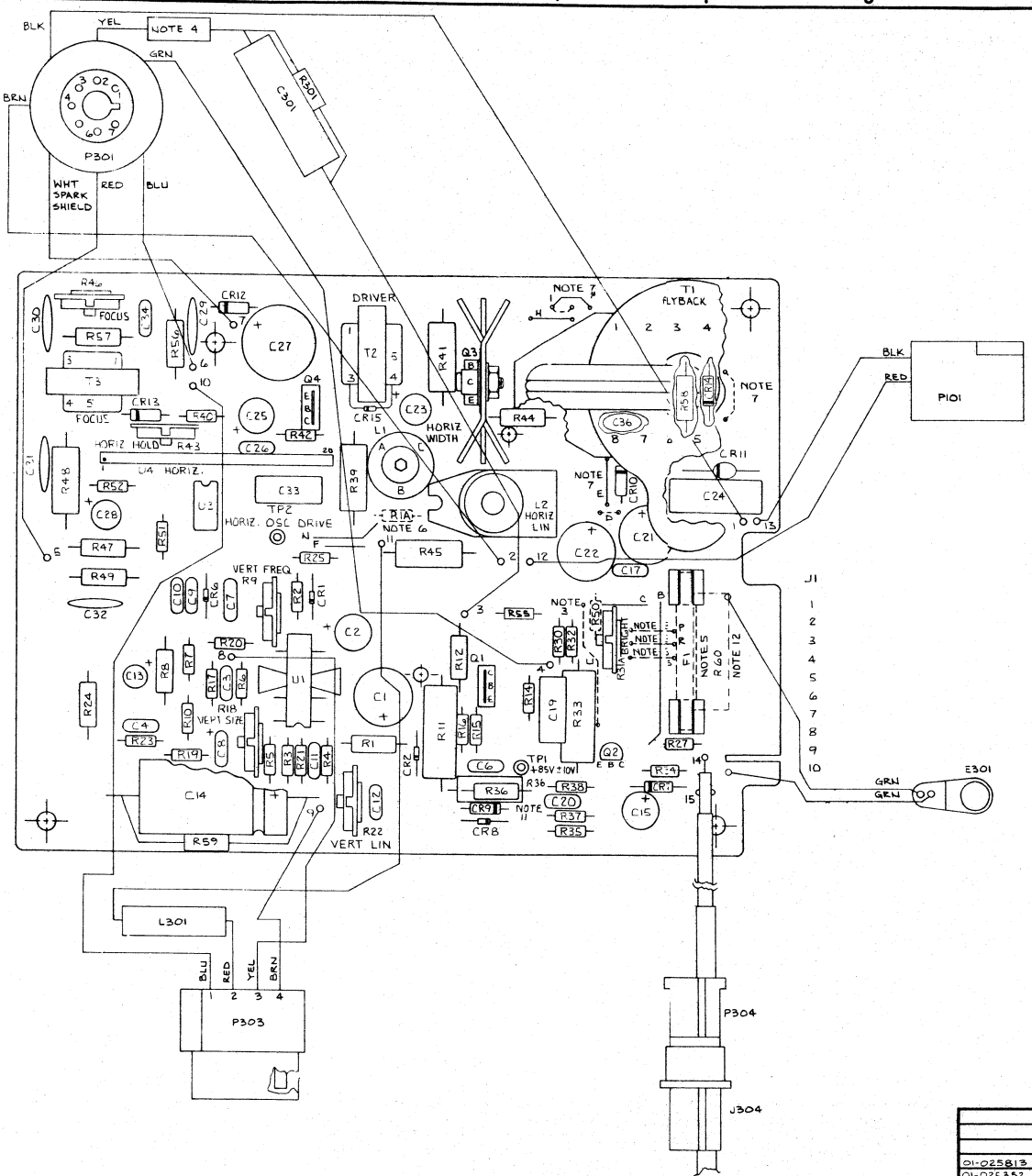

REVISIONS			
LETTER	DESCRIPTION	DATE	APPROVED
—	RELEASED TO PRODUCTION		
A	INCORPORATED ECO NO. 6512-2	2/19/80	
B	INCORPORATED ECO NO. 6517-2	2/28/80	
C	INCORPORATED ECO NO. 6523-2	3/24/80	
D	INCORPORATED ECO NO. 6544-2	[illegible]	
E	INCORPORATED ECO NO. 6548-3	4/14/80	
F	INCORPORATED ECO NO 6562-2	6/17/80	
G	INCORPORATED ECO NO. 6563-2	6/[illegible]	
H	INCORPORATED ECO NO 6565-2	7/[illegible]	

NOTES:

1. LIST OF MATERIALS: LM01-025505-003.
2. ELECTRICAL SCHEMATIC: 50-026041-000.
3. FOR OPTIONAL EXTERNAL BRIGHTNESS CONTROL (SUPPLIED BY CUSTOMER THRU P1 CONNECTOR); OMIT BRIGHT POT (R34A), INSTALL 2.2 MEGΩ 1/4 WATT RESISTOR (R50), AND INSTALL JUMPERS AS INDICATED BY DASHED LINES.
4. THIS IN LINE COMPONENT, (PART OF ITEMS NO. 34 AND 35) MAY BE RELOCATED, IN LINE, TO FACILITATE ADDITIONAL COMPONENT INSTALLATION.
5. FOR OPTIONAL EXTERNAL +12VDC POWER (SUPPLIED BY CUSTOMER THRU P1 CONNECTOR); INSTALL 2 AMP SLO-BLO FUSE (F1).
6. OPTIONAL LOCATION FOR RESISTOR (1/4 WATT) INSTALLED BY FACTORY WHEN REQUIRED.

11. FOR 9" AND 12" MONITORS USE 1 WATT RESISTOR (R36), FOR 5" AND 7" MONITORS USE 1/2 WATT RESISTOR (R36).
12. RESISTOR R60 SHALL BE USED IN PLACE OF F1 FOR 15VDC OPERATION.

01-025813	BHD-700
01-025352	BHD-500
01-025356	BHD-900
01-025357	BHD-1200
NEXT ASSY	USED ON
APPLICATION	

DO NOT SCALE THIS DRAWING
DIMENSION IN INCHES
UNLESS OTHERWISE INDICATED
TOLERANCES
UNLESS OTHERWISE INDICATED
DECIMALS:
X = ±
.XX = ±
.XXX = ±
FRACTIONS = ±
ANGLES = ±

DRAWN BY [illegible] DATE [illegible]
CHECKED [illegible] DATE [illegible]
APPROVED [illegible] DATE [illegible]

These materials are and contain confidential and trade secret information of Bell & Howell. Neither they nor the information they contain shall be copied, reproduced, or disclosed to persons not having a need to know for Bell & Howell business purposes or used except for such purposes without prior written permission of Bell & Howell.

© Copyright 1979 Bell & Howell Company. All rights reserved

TeleMation
A Division of Bell & Howell

ASSEMBLY:
DEFLECTION / VIDEO CARD
(TTL/OSC) A1/T/D

SIZE D | REV H | DWG NO 01-025505-003
SCALE 2/1 | SHEET 3 OF 4

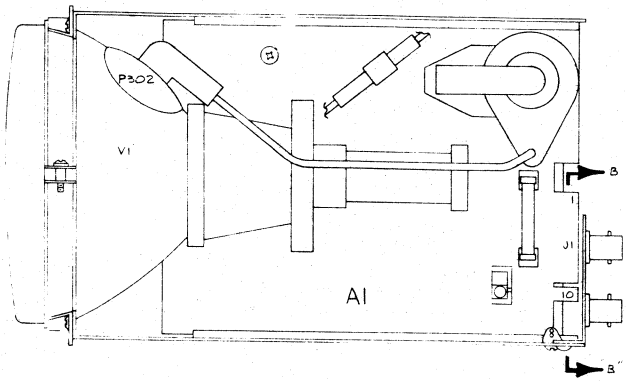

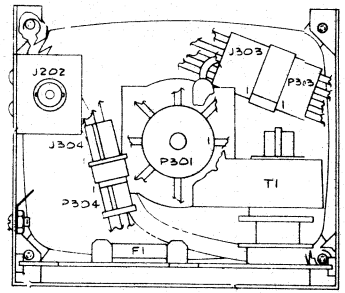

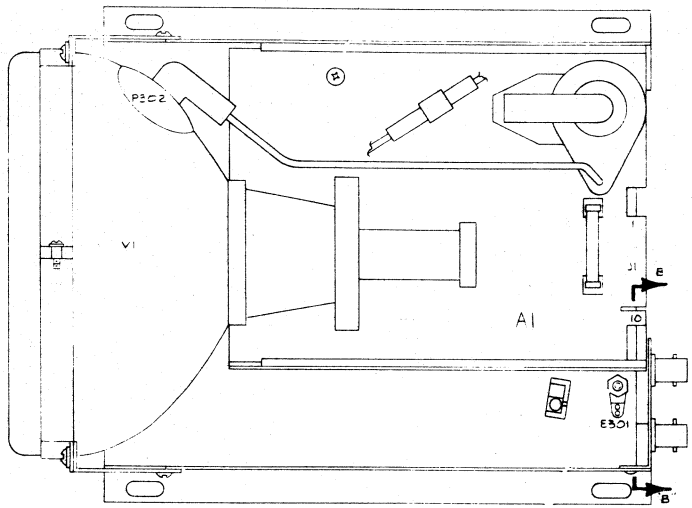

VIEW A-A

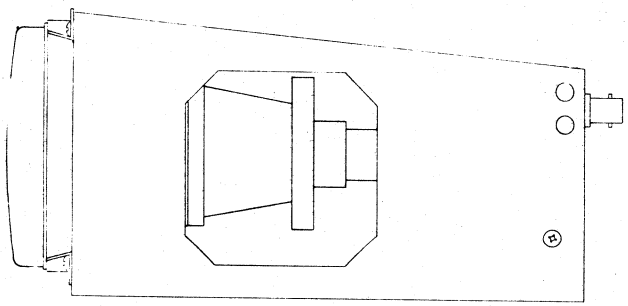

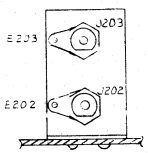

SECTION "B-B"

INTERCONNECTION DIAGRAM: 51-025500-000.

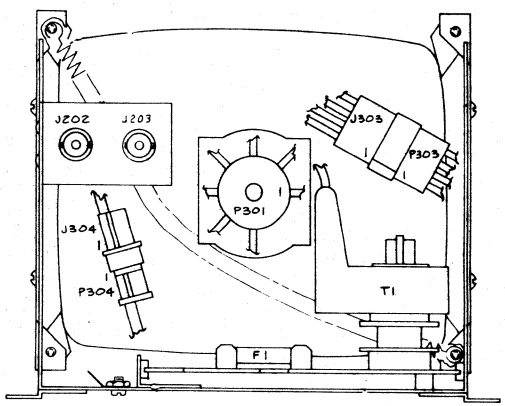

		DO NOT SCALE THIS DRAWING	DRAWN BY [illegible] DATE 2/20/78	TeleMation A Division of Bell & Howell
		DIMENSION IN INCHES UNLESS OTHERWISE INDICATED	CHECKED [illegible] DATE 2/20/79	ASSEMBLY, 5" MONITOR
		TOLERANCES UNLESS OTHERWISE INDICATED	APPROVED [illegible] DATE 10/10/79	
		DECIMALS: .X - ± .XX - ± .XXX - ± FRACTIONS - ± ANGLES - ±	These materials are and contain confidential and trade secret information of Bell & Howell. Neither they nor the information they contain shall be copied, reproduced, or disclosed to persons not having a need to know for Bell & Howell business purposes or used except for such purposes without prior written permission of Bell & Howell. © Copyright 1979 Bell & Howell Company. All rights reserved.	SIZE D REV TAB DWG NO 01-025352-TAB
—	BHD-500 KIT			SCALE 1/1 SHEET 1 OF 1
—	BHD-500			
NEXT ASSY	USED ON			
APPLICATION				

01-025352-002	KIT	—				
01-025352-001	SHOWN	B	6516-2	RDT	7/5/80	[illegible]
PART NO	DESCRIPTION	REV LTR	ECO NO.	INC. BY	DATE	APPROVED
TABULATION		REVISION STATUS				

		DO NOT SCALE THIS DRAWING	DRAWN BY [illegible] DATE [illegible]	TeleMation A Division of Bell & Howell
		DIMENSION IN INCHES UNLESS OTHERWISE INDICATED	CHECKED [illegible] DATE [illegible]	ASSEMBLY, 7" MONITOR
		TOLERANCES UNLESS OTHERWISE INDICATED	APPROVED [illegible] DATE 11/6/79	
		DECIMALS: .X - ± .XX - ± .XXX - ± FRACTIONS - ± ANGLES - ±	These materials are and contain confidential and trade secret information of Bell & Howell. Neither they nor the information they contain shall be copied, reproduced, or disclosed to persons not having a need to know for Bell & Howell business purposes or used except for such purposes without prior written permission of Bell & Howell. © Copyright 1979 Bell & Howell Company. All rights reserved.	SIZE D REV TAB DWG. NO. 01-025813-TAB
—	BHD-700 KIT			SCALE 1/1 SHEET 1
—	BHD-700			
NEXT ASSY	USED ON			
APPLICATION				

01-025813-002	7" MONITOR KIT	—				
01-025813-001	7" MONITOR (SHOWN)	B	6516-1	RDT	7/5/80	[illegible]
PART NO.	DESCRIPTION	REV LTR	ECO NO.	INC. BY	DATE	APPROVED
TABULATION		REVISION STATUS				

GPIB BUS CONNECTOR

$\overline{DIO\ 1}$	1	13	$\overline{DIO\ 5}$
$\overline{DIO\ 2}$	2	14	$\overline{DIO\ 6}$
$\overline{DIO\ 3}$	3	15	$\overline{DIO\ 7}$
$\overline{DIO\ 4}$	4	16	$\overline{DIO\ 8}$
$\overline{EOI}$	5	17	$\overline{REN}$
$\overline{DAV}$	6	18	GND
$\overline{NRFD}$	7	19	GND
$\overline{NDAC}$	8	20	GND
$\overline{IFC}$	9	21	GND
$\overline{SRQ}$	10	22	GND
$\overline{ATN}$	11	23	GND
	12	24	GND

			DATE		NAME		DOLCH LOGIC INSTRUMENTS
			ERN	REVISIONS	DATE		BPIB ON REAR PANEL
			CODE		CHECK	DRAWN	PART NUMBER: 5 4850 - 01 / SHEET: 5/9

(ATTACHED TO MB ON BOTTOM TO J1 OF RC.)

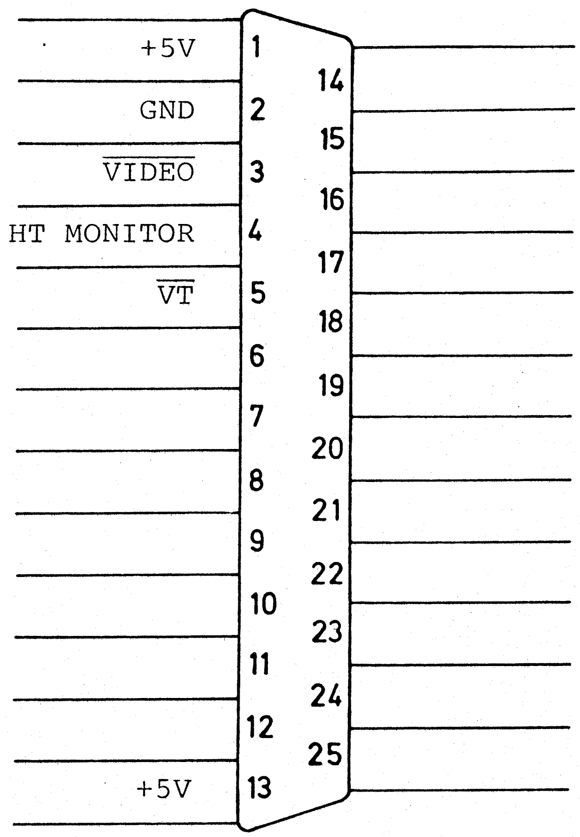

DOLCH LOGIC INSTRUMENTS

VIDEO INTERFACE
REAR PANEL

CODE	ERN	DATE	REVISIONS	DATE	NAME	CHECK	DRAWN	PART NUMBER	SHEET
								5 4850 - 01	6/9