IBM MOTIF CANADA

MACHINE INDEX CARD — C.E. COPY

771

SERIAL NUMBER	INDEPENDENT MACHINE	SYSTEM/TIE-IN NO.	MODEL	MACHINE TYPE	ORDER REFERENCE NO.
9103299	Y	DL953	001	1132	DN8901

ACCOUNT NUMBER	BRANCH OR COUNTRY NO.	TYPE OF AGREEMENT	TYPE OF ORDER	VOLTAGE	CYCLE	PHASE	AMPERAGE	DATE INSTALLED
020599	947	5	00	220	50	1	.	

CUSTOMER NAME

U K

DATE INSTALLED	QTY.	DESCRIPTION	BILL OF MATERIAL OR PART NUMBER	WIRING DIAGRAM OR ENGINEERING CHANGE NO.
		PRINTER ASM FINAL	0738200	0738140
	01	SHIPPING GROUP	0738125	
	01	COVER COLOUR GRP RED	0738134	
	01	COVER GRP WTC	0738388	
	01	IDIOMATICS GERMAN	0738466	
	01	PRINTER ASSEM C GROUP 50	0738470	
	01	LABEL	0911932	
	01	TYPE WHEEL ASM STD ARR	0912155	

C.E. — ADD FIELD INSTALLED SPECIAL FEATURES TO THE ABOVE

FORM NO. 1312-1

RECORD FIELD INSTALLED E.C.'S — UNIT RECORD MACHINES

C.E.M. NUMBER	B/M OR PART NUMBER	W/D NUMBER	E.C. LEVEL	DATE INSTALLED	REMARKS

Reference B/M 738125 Part Number 911861

SHIPPING CHECK LIST
MACHINE TYPE 1132

	Part No. or Form No.	Qty.	Description	Dept. Supplying	Dept. Supplying Indicate	Packer Indicate
Supply the following with each machine.						
			M/C Index Card (Spec)	410		
(F)	105047	2	Lk. Washer Guide	173	✓	
(F)	196397	2	Screw Guide	173	✓	
(F)	221552	1	Platen Hard	410		
(F)	223947	1	Spool	410		
(F)	425115	1	Ribbon	410		
(F)	738139	2	Paper Guide	173	✓	
(F)	738140	1	Logic Binder	497		
(F)	738471	1	Form Tractor	173	✓	
	738162	1	Ref. Dwg. Mech. Asm.	410		
(F)	2243650	1	Paper Stacker	410		
	2243650	1	Ref. Dwg. Paper Stacker	410		
(F)	2532460	2	Guide Forms Tractor	112	✓	
	5319888	16	Screw Kickstrip Mtg.	410		
Reference B/M 2532463 Maint. Pkg. Grp.						
	738217	1	Rgf. Dwg. Print Wheel Asm.	410		
(F)	738597	1	Installation Instructions	410		
	227-3622	1	Ref. Manual	410		
	227-3621	1	Maint. Manual	410		
	127-806	1	Parts Cat. (Export Only)	410		
(F)	202911	1	Shaft Print Wheel	410		
(F)	216513	1	Pad Carriage Tape	410		
(F)	220710	1	Aligner Typewheel	410		
(F)	221030	1	Mucilage Tape	410		
Reference B/M 2532464 Kickstrip Grp.						
	738206	1	Ref. Dwg. Cover Asm.	410		
	32042	19	Screw	410		
	738426	2	Kickstrip Half End	410		
	738427	1	Kickstrip Full End	410		
	738428	2	Kickstrip Front & Rear	410		

(F) Indicates items essential for machine installation.

Present EC C-6929 - June 11, 1968
Previous EC 131257 - February 5, 1968

Date Packed _____
Man No. (Packer) _____
M/C Serial No. 9103299

PAGE NO.	SH	TITLE	PART NO	EC NO.	FEATURE B/M OR B/MS
** LOGIC TYPE		REFERENCE DATA 5			
1	*******	**********	0000000	000000	
2		ITC DOCUMENT VOLUME CHECKLIST	0000000	000000	
3	-------	I-----I--------I------I---------I	0000000	000000	
4	VOLUME	I 468 I VENDOR I TEST I QC DEPT I	0000000	000000	
5	-------	I-----I--------I------I---------I	0000000	000000	
6	001	I X I I I I	0000000	000000	
7	-------	----------	0000000	000000	

MACH LIST FOR-1132 MOD- SER-9103299 PLT-91 REQSTR LPW // 26JUN68

CTRY-947 CUST-W020599-U K SER BR- SYS#- -000-DL953 TYP-

SHIPPED- SHP SEQ-A0032 FCT SEQ-B0064 W/D SUF- MACH STA-FACTRY

SEQ#	EC#	STATUS	FLD B/M	FCSI #	TIME	ECA#	DATE
A0032	131273	PRES LVL					
A0033	131287	~~INQUIRY*~~ incl. 27.2.69					

B0064 FCT 131254C FACT LVL

Y0003 OPT 415782A INQUIRY*
Y0004 OPT 131285 INQUIRY*

FEAT BM	QTY	FEATURE NAME	STATUS	DATE	ACC	SHP-LVL-FCT
0738125	001	SHIPPING GROUP	INT	JUN68		D0003 E0008
D0003	415759A	PRES LVL				

E0008 FCT 006697P FACT LVL

FEAT BM	QTY	FEATURE NAME	STATUS	DATE	ACC	SHP-LVL-FCT
0738134	001	COVER GROUP RED	INT	JUN68		D0002 E0000
D0002	415760G	PRES LVL				

FEAT BM	QTY	FEATURE NAME	STATUS	DATE	ACC	SHP-LVL-FCT
0738388	001	COVER GROUP W T C	INT	JUN68		D0002 E0004
D0002	415760G	PRES LVL				

E0004 FCT 006757N FACT LVL

FEAT BM	QTY	FEATURE NAME	STATUS	DATE	ACC	SHP-LVL-FCT

EC 131289 27.2.69 incl.

MACH LIST FOR-1132 MOD- SER-9103299 PLT-91 REQSTR LPW // 26JUN68

SEQ#	EC#	STATUS	FLD B/M	FCSI #	TIME	ECA#	DATE
0738466	001	IDIOMATIC GRP GERMAN		INT	JUN68		D0004 E0007
D0004	415754B	PRES LVL					

E0007 FCT 006757Q FACT LVL

FEAT BM	QTY	FEATURE NAME	STATUS	DATE	ACC	SHP-LVL-FCT
0738470	001	PRINTER ASSM 50 CY	INT	JUN68		D0006 E0007
D0006	131273	PRES LVL				

E0007 FCT 131254C FACT LVL

1132 00000& 000000& 00000& 000000& 00000& 000000& 131287 5870405 12.[illegible]8

PAGE NO. SH	TITLE	PART NO	EC NO.	FEATURE B/M OR B/MS
** LOGIC TYPE	SYSTEM DIAGRAMS 0			
PR001	SOCKET LISTING	2201222	419621C	
PR101	PRINT DISC SOLAR CELLS & AMP	2201160	415480C	
PR111	SOLAR CELL COMMON CONNECTIONS	2201161	415486	
PR121	PRINTER OPERATOR SWITCHES	2201162	419621B	
PR131	PRINTER CARRIAGE CONTACTS	2201163	131261	
PR141	PRINTER CARRIAGE BRUSHES	2201164	419621B	
PR151	PRINTER INDICATORS & DRIVERS	2201165	415482	
PR161	PRINTER CARRIAGE MAGNETS &DRIVERS	2201166	415492	
PR171	PRINTER DATA POWERING BITS 0-7	2201167	415482	
PR181	PRINTER DATA POWERING BITS 8-15	2201168	415482	
PR201	PRINTER MAGNETS&DRIVERS 0-9	2201169	415482	
PR202	PRINTER MAGNETS&DRIVERS 10-19	2201170	415482	
PR203	PRINTER MAGNETS&DRIVERS 20-29	2201171	415482	
PR204	PRINTER MAGNETS&DRIVERS 30-39	2201172	415482	
PR205	PRINTER MAGNETS&DRIVERS 40-49	2201173	415482	
PR206	PRINTER MAGNETS&DRIVERS 50-59	2201174	415482	
PR207	PRINTER MAGNETS&DRIVERS 60-69	2201175	415482	
PR208	PRINTER MAGNETS&DRIVERS 70-79	2201176	415482	
PR209	PRINTER MAGNETS&DRIVERS 80-89	2201177	415482	
PR211	PRINTER MAGNETS&DRIVERS 90-99	2201178	415482	
PR212	PRINTER MAGNETS&DRIVERS 100-109	2201179	415482	
PR213	PRINTER MAGNETS&DRIVERS 110-119	2201180	415482	
PR301	PRINTER ENTRY	2201223	415492	
PR311	PRINTER EXIT	2201224	419621	
YA101	AC POWER DISTRIBUTION	2201330	419634	
YA111	POWER SUPPLY & DIST 50 CYCLE	2201329	131273	.W. 0738470
YA121	&48V PRINT MAGNET CB	2201332	415492	
YA131	48V POWER SUPPLY	2201333	131258	
YA141	COMPONENT PANAL ASM	2532466	131261	
YA142	CARRIAGE BRUSH LATCH TIMING CHART	2231323	419621B	
YA151	SOLAR CELL PICTORIAL	2201335	415480C	
YA161	TIMING CHART-PRINT DISC	2201336	415480C	

PAGE NO. SH	TITLE	PART NO	EC NO.	FEATURE B/M OR B/MS
** LOGIC TYPE SLT BOARDS	6			
03A-A1	CUSTOMIZED BOARD 03A-A1	0738390	419621	

A2 CONNECTOR
B02 PR311001
B03 PR121BD4
B04 PR141AK4
B05 PR141AL4
B07 PR141AM4
B08 PR141AN4
B09 PR141AP4
B10 PR141AQ4
B12 PR141AR4
B13 PR141AS4
D02 PR121BC4
D04 PR301AR7
D05 PR121AN4
D06 PR121AP4
D07 PR121AQ4
D09 PR121AR4
D10 PR131AJ4
D11 PR131AK4
D12 PR131AL4
D13 PR131BD4

A3 SINGLE CARD 5401
PR111

A4 CONNECTOR
B02 PR151AA4
B03 PR151AB4
B04 PR151AC4
B05 PR151AD4
B12 PR161AA2
B13 PR161AB2
D04 PR101AF4

A5 CONNECTOR
B02 PR201AF4
B03 PR201AW4
B04 PR201AG4
B05 PR201AX4
B07 PR201AH4
B08 PR201AY4
B09 PR201AJ4
B10 PR201AZ4
B12 PR201AK4
B13 PR201BA4
D02 PR202AF4
D04 PR202AW4
D05 PR202AG4
D06 PR202AX4
D07 PR202AH4
D09 PR202AY4
D10 PR202AJ4
D11 PR202AZ4
D12 PR202AK4
D13 PR202BA4

A6 CONNECTOR
B02 PR205AF4
B03 PR205AW4
B04 PR205AG4
B05 PR205AX4
B07 PR205AH4
B08 PR205AY4
B09 PR205AJ4
B10 PR205AZ4
B12 PR205AK4
B13 PR205BA4
D02 PR206AF4
D04 PR206AW4
D05 PR206AG4
D06 PR206AX4
D07 PR206AH4
D09 PR206AY4
D10 PR206AJ4
D11 PR206AZ4
D12 PR206AK4
D13 PR206BA4

A7 CONNECTOR
B02 PR209AF4
B03 PR209AW4
B04 PR209AG4
B05 PR209AX4
B07 PR209AH4
B08 PR209AY4
B09 PR209AJ4
B10 PR209AZ4
B12 PR209AK4
B13 PR209BA4
D02 PR211AF4
D04 PR211AW4
D05 PR211AG4
D06 PR211AX4
D07 PR211AH4
D09 PR211AY4
D10 PR211AJ4
D11 PR211AZ4
D12 PR211AK4
D13 PR211BA4

B2 CONNECTOR
B03 PR121BD4
B04 PR141AK4
B05 PR141AL4
B07 PR141AM4
B08 PR141AN4
B09 PR141AP4
B10 PR141AQ4
B12 PR141AR4
B13 PR141AS4
D02 PR121BC4
D04 PR301AR7
D05 PR121AN4
D06 PR121AP4
D07 PR121AQ4
D09 PR121AR4
D10 PR131AJ4
D11 PR131AK4
D12 PR131AL4
D13 PR131BD4

B3 SINGLE CARD 5400
PR111

B4 SINGLE CARD 5401
PR111

B5 CONNECTOR
B02 PR203AF4
B03 PR203AW4
B04 PR203AG4
B05 PR203AX4
B07 PR203AH4
B08 PR203AY4
B09 PR203AJ4
B10 PR203AZ4
B12 PR203AK4
B13 PR203BA4
D02 PR204AF4
D04 PR204AW4
D05 PR204AG4
D06 PR204AX4
D07 PR204AH4
D09 PR204AY4
D10 PR204AJ4
D11 PR204AZ4
D12 PR204AK4
D13 PR204BA4

B6 CONNECTOR
B02 PR207AF4
B03 PR207AW4
B04 PR207AG4
B05 PR207AX4
B07 PR207AH4
B08 PR207AY4
B09 PR207AJ4
B10 PR207AZ4
B12 PR207AK4
B13 PR207BA4
D02 PR208AF4
D04 PR208AW4
D05 PR208AG4
D06 PR208AX4
D07 PR208AH4
D09 PR208AY4
D10 PR208AJ4
D11 PR208AZ4
D12 PR208AK4
D13 PR208BA4

B7 CONNECTOR
B02 PR212AF4
B03 PR212AW4
B04 PR212AG4
B05 PR212AX4
B07 PR212AH4
B08 PR212AY4
B09 PR212AJ4
B10 PR212AZ4
B12 PR212AK4
B13 PR212BA4
D02 PR213AF4
D04 PR213AW4
D05 PR213AG4
D06 PR213AX4
D07 PR213AH4
D09 PR213AY4
D10 PR213AJ4
D11 PR213AZ4
D12 PR213AK4
D13 PR213BA4

C4 SINGLE CARD
5803806 3806
PR161 A1

C5 SINGLE CARD 5400
PR111

C6 SINGLE CARD 5400
PR111

C7 SINGLE CARD 5401
PR111

D4 SINGLE CARD
5803806 3806
PR161 A1

D5 SINGLE CARD
5803819 3819
PR151 A1 A2 A3 A4

D7 SINGLE CARD 5400
PR111

E4 E5 DOUBLE CARD
5806222 6222
PR201 A1 A2 A3 A4 B1 B2
B3 B4 C1 C2 C3 C4
D1 D2 D3 D4 E1 E2
E3 E4

E6 E7 DOUBLE CARD
5806222 6222
PR207 A1 A2 A3 A4 B1 B2
B3 B4 C1 C2 C3 C4
D1 D2 D3 D4 E1 E2
E3 E4

F4 F5 DOUBLE CARD
5806222 6222
PR202 A1 A2 A3 A4 B1 B2
B3 B4 C1 C2 C3 C4
D1 D2 D3 D4 E1 E2
E3 E4

F6 F7 DOUBLE CARD
5806222 6222
PR206 A1 A2 A3 A4 B1 B2
B3 B4 C1 C2 C3 C4
D1 D2 D3 D4 E1 E2
E3 E4

G4 G5 DOUBLE CARD
5806222 6222
PR203 A1 A2 A3 A4 B1 B2
B3 B4 C1 C2 C3 C4
D1 D2 D3 D4 E1 E2
E3 E4

G6 G7 DOUBLE CARD
5806222 6222
PR209 A1 A2 A3 A4 B1 B2
B3 B4 C1 C2 C3 C4
D1 D2 D3 D4 E1 E2
E3 E4

H4 H5 DOUBLE CARD
5806222 6222
PR204 A1 A2 A3 A4 B1 B2
B3 B4 C1 C2 C3 C4
D1 D2 D3 D4 E1 E2
E3 E4

H6 H7 DOUBLE CARD
5806222 6222
PR211 A1 A2 A3 A4 B1 B2
B3 B4 C1 C2 C3 C4
D1 D2 D3 D4 E1 E2
E3 E4

J4 J5 DOUBLE CARD
5806222 6222
PR205 A1 A2 A3 A4 B1 B2
B3 B4 C1 C2 C3 C4
D1 D2 D3 D4 E1 E2
E3 E4

J6 J7 DOUBLE CARD
5806222 6222
PR212 A1 A2 A3 A4 B1 B2
B3 B4 C1 C2 C3 C4
D1 D2 D3 D4 E1 E2
E3 E4

K2 SINGLE CARD 3471
PR101 A1

K3 SINGLE CARD 5400
PR111

K4 K5 DOUBLE CARD
5806222 6222
PR206 A1 A2 A3 A4 B1 B2
B3 B4 C1 C2 C3 C4
D1 D2 D3 D4 E1 E2
E3 E4

K6 K7 DOUBLE CARD
5806222 6222
PR213 A1 A2 A3 A4 B1 B2
B3 B4 C1 C2 C3 C4
D1 D2 D3 D4 E1 E2
E3 E4

L2 SINGLE CARD 3471
PR101 A1 B1 C1 D1

L3 SINGLE CARD 5400
PR111

L4 SINGLE CARD 5400
PR111

L5 SINGLE CARD
5803813 3813
PR171 A1 A2 A3 A4 A5 A6
A7 A8 A9 AA AB AC
AD AE AF AG AH AJ
AK AL AM AN AP AQ
AS AT AU AV AW AX
AY AZ

L6 SINGLE CARD
5803813 3813
PR181 A1 A2 A3 A4 A5 A6
A7 A8 A9 AA AB AC
AD AE AF AG AH AJ
AK AL AM AN AP AQ
AS AT AU AV AW AX
AY AZ

L7 SINGLE CARD 5400
PR111

M2 SINGLE CARD 3471
PR101 A1 B1 C1 D1

M3 SINGLE CARD 5400
PR111

M4 SINGLE CARD 5400
PR111

M5 SINGLE CARD 5400
PR111

M6 SINGLE CARD 5400
PR111

M7 SINGLE CARD 5401
PR111

N2 CONNECTOR
B02 PR101AA4
B03 PR101AL4
B04 PR101AB4
B05 PR101AM4
B07 PR101AC4
B08 PR101AN4
B09 PR101AD4
B10 PR101AP4
B12 PR101AE4

N3 SINGLE CARD 5400
PR111

N4 CONNECTOR
B02 PR311001
B03 PR101AQ4
B04 PR101AG4
B05 PR101AR4
B07 PR101AH4
B08 PR101AS4
B09 PR101AJ4
B10 PR101AT4
B12 PR101AK4
B13 PR301AR9
D02 PR301AP4
D04 PR301AP6
D06 PR301AR3
D07 PR301AP2
D09 PR301AR5
D10 PR301AB2
D11 PR301AB4
D12 PR301AB6
D13 PR301AD1

N5 CONNECTOR
B02 PR301AF2
B03 PR301AF6
B04 PR301AH3
B05 PR301AH7
B07 PR301AK2
B08 PR301AK6
B09 PR301AM3
B10 PR301AM7
B12 PR301AD3
B13 PR301AD5
D02 PR301AF4
D04 PR301AH1
D05 PR301AH5
D06 PR301AH9
D07 PR301AK4
D09 PR301AM1
D10 PR301AM5
D11 PR301AM9
D12 PR301AD7
D13 PR301AD9

N6 SINGLE CARD 5400
PR111

N7 SINGLE CARD 5400
PR111

PLUG LIST

PART NO ACC	TYPE	SOCKETS	TOTAL
5803806	3806	C4 D4	02
5803813	3813	L5 L6	02
5803819	3819	D5	01
5806222	6222	E4 E6 F4 F6 G4 G6 H4 H6 J4 J6 K4 K6	12
	3471	K2 L2 M2	03
	5400	B3 C5 C6 D7 K3 L3 L4 L7 M3 M4 M5 M6 N3 N6 N7	15
	5401	A3 B4 C7 M7	04
	CONN	A2 A4 A5 A6 A7 B2 B5 B6 B7 N2 N4 N5	12

SOCKET LISTING
DATE 08-21-68 MACH. 1132
LOG 1271 BOARD 03A-A1
PREV. ENGR. - -
PRES. ENGR. 08-20-68 131289
P.N. 2201222
IBM CORP. SDD BLK.

P R O O 1
000

P R O O 1

	A	B	C	D	E	F	G	H	J	K	L	M	N	P	Q	R	S	T	U	V	W	X	Y	Z
1																								
2	CONN X	CONN X								3471 X	3471 X	3471 X	CONN X											
3	5401 X	5400 X								5400 X	5400 X	5400 X	5400 X											
4	CONN X	5401 X	580380 6 X	580380 6 X	580622 2 X	580622 2 X	580622 2 X	580622 2 X	580622 2 X	580622 2 X	5400 X	5400 X	CONN X											
5	CONN X	CONN X	5400 X	580381 9 X							580381 3 X	5400 X	CONN X											
6	CONN X	CONN X	5400 X		580622 2 X	580622 2 X	580622 2 X	580622 2 X	380622 2 X	580622 2 X	580381 3 X	5400 X	5400 X											
7	CONN X	CONN X	5401 X	5400 X							5400 X	5401 X	5400 X											
8																								

PROO1

SYMBOLS

X- NO RULE/SOCKET
E- CONFLICT
S- PORTIONS LEFT

SLDA CHART
DATE 09-09-68 MACH. 1132

LOG 1350 BOARD 03A-A1
PREV. ENGR. 03-03-67 419621C
PRES. ENGR. 08-20-68 131289
P.N. 2201222

IBM CORP. SDD BLK.

PROO1

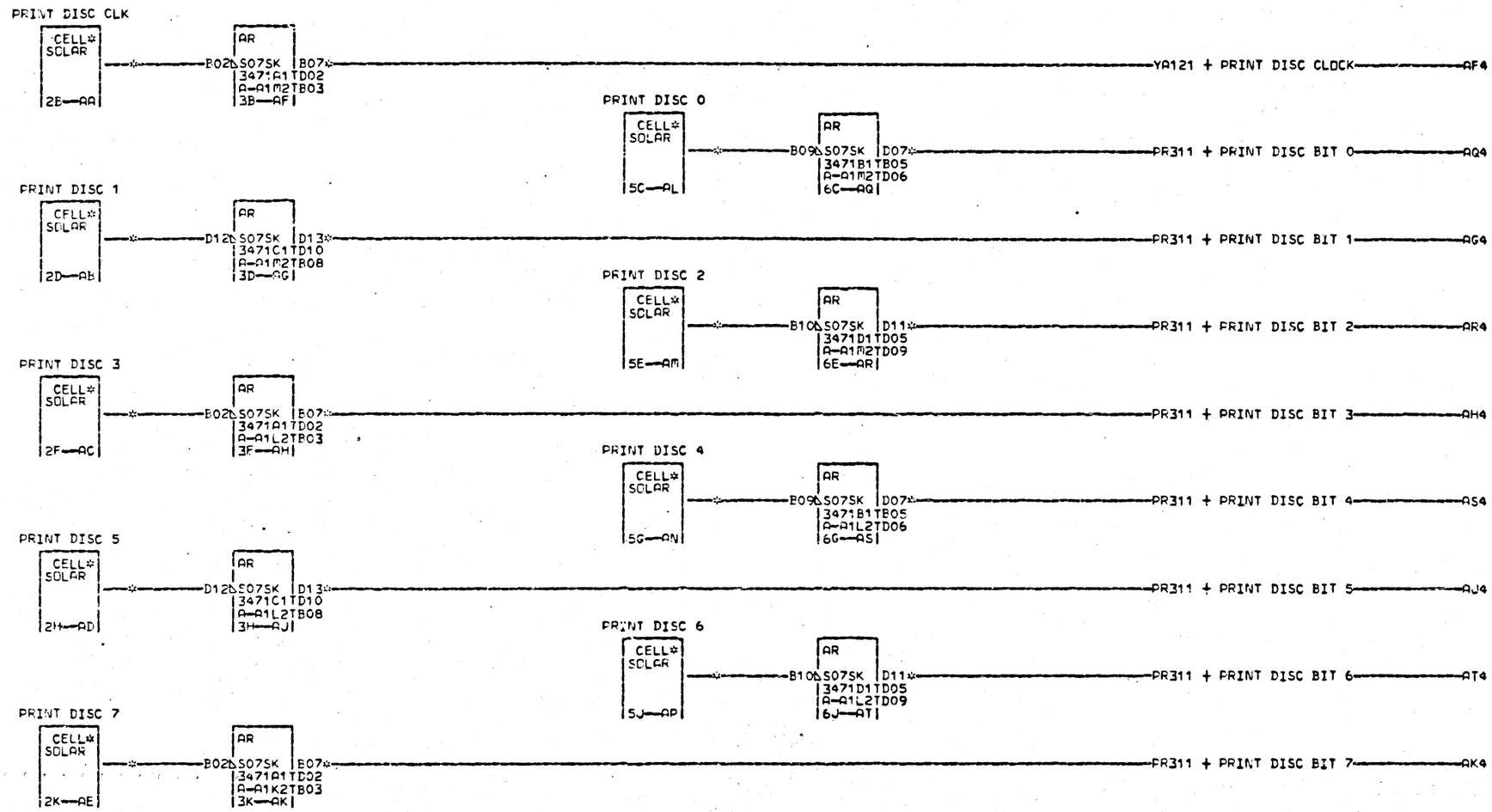

SOLAR CELL COMMON CONNECTIONS
ON PAGE PR111

AA4	A—A1N2B02	AK4	A—A1N4B12
AB4	A—A1N2B04	AL4	A—A1N2B03
AC4	A—A1N2B07	AM4	A—A1N2B05
AD4	A—A1N2B09	AN4	A—A1N2B08
AE4	A—A1N2B12	AP4	A—A1N2B10
AF4	A—A1N4B04	AQ4	A—A1N4B03
AG4	A—A1N4B06	AR4	A—A1N4B05
AH4	A—A1N4B07	AS4	A—A1N4B08
AJ4	A—A1N4B09	AT4	A—A1N4B10

02-17-65 415480
04-13-65 415480C

PRINT DISC SOLAR CELLS AND AMPLIFIERS	P
DATE 05-18-65 MACH. 1132	R
LOG 112C FRAME 03	1
P.N. 2201160	0
IBM CORP. GPD BLK. AU	1
	000

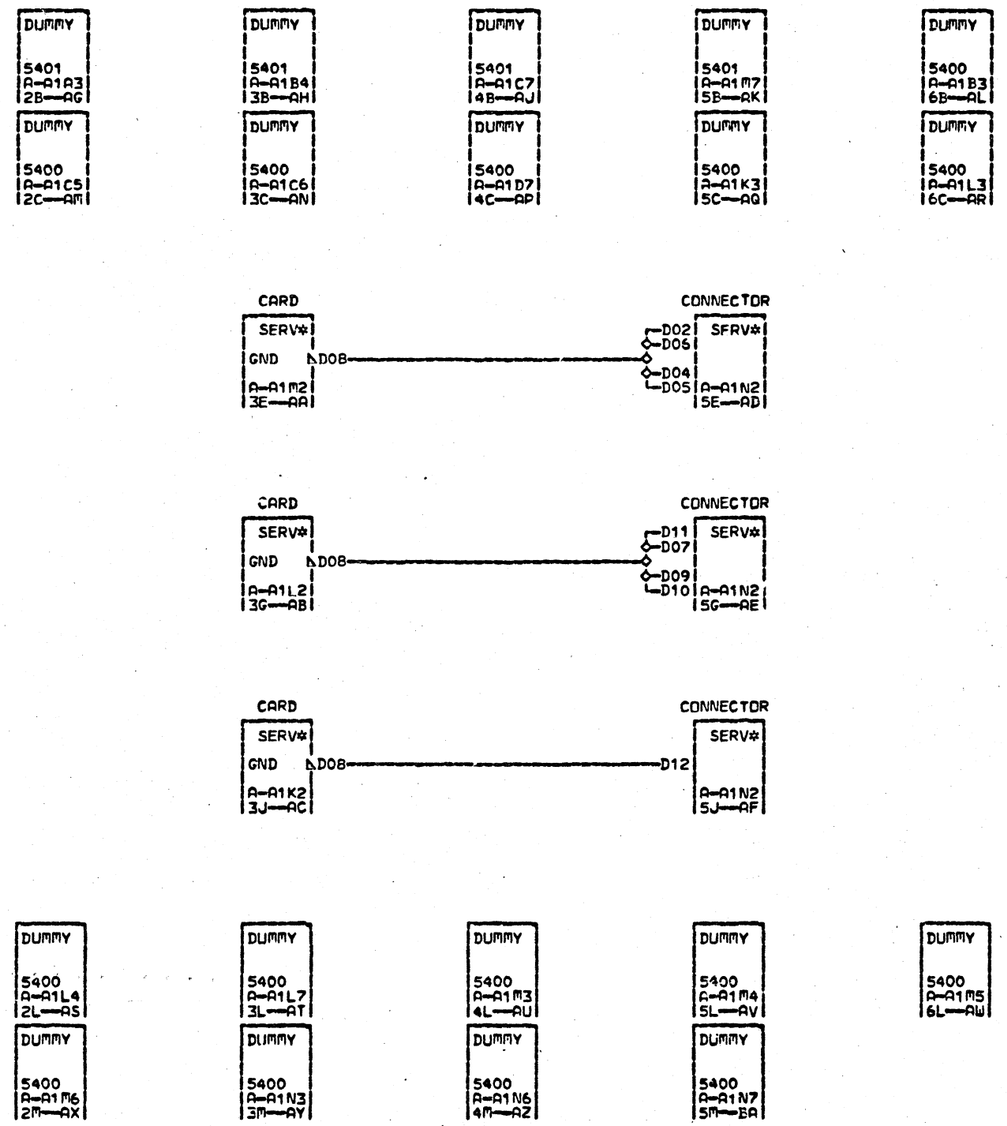

02-17-65 415480
04-13-65 415480C
09-17-65 415486

SOLAR CELL COMMON CONNECTIONS
DUMMY CARDS
DATE 09-21-65 MACH. 1132
LOG 264C FRAME 03
P.N. 2201161
IBM CORP. GPD BLK. BB

PR1111 000

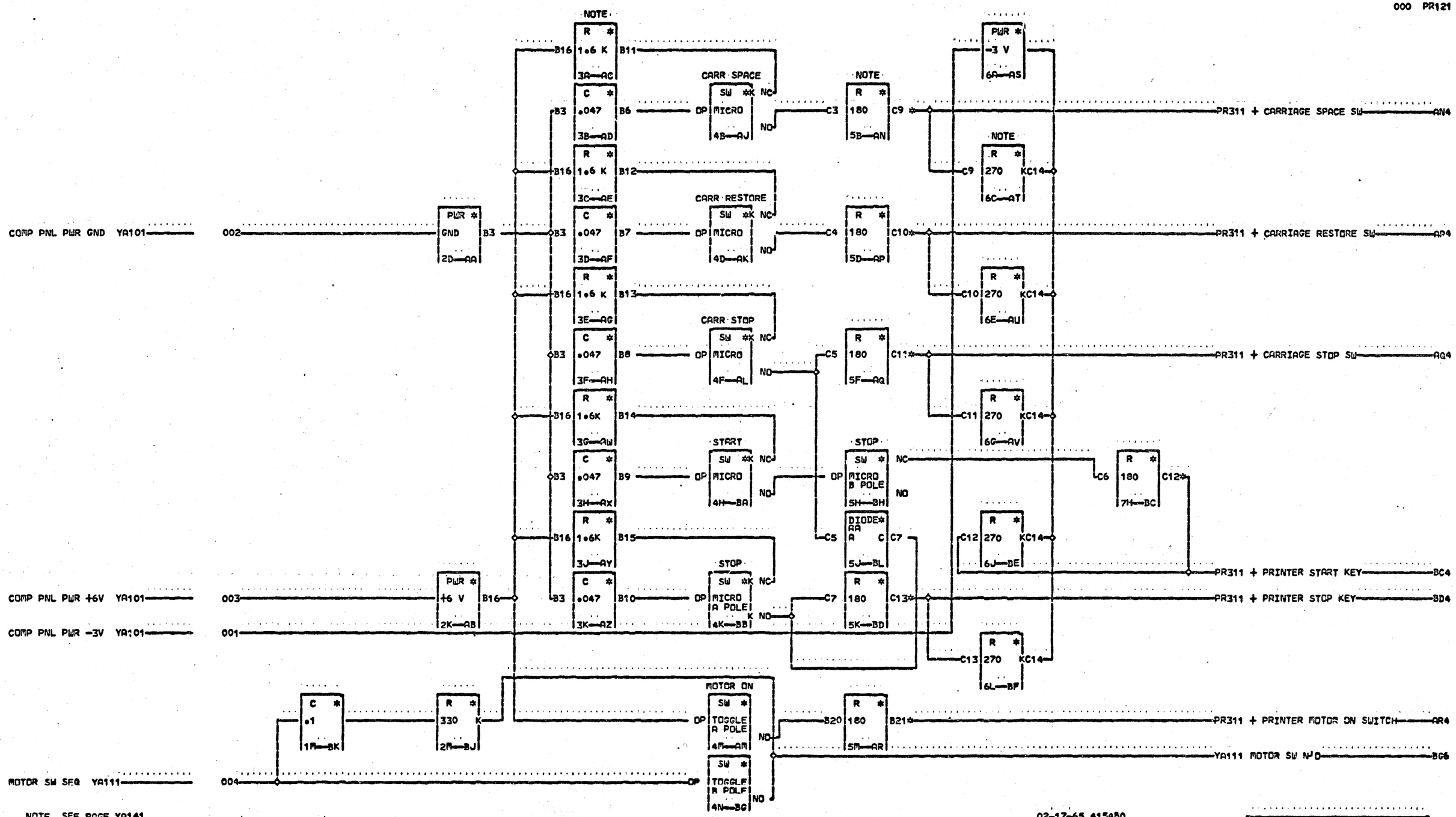

NOTE SEE PAGE YA141
FOR CKT DIAGRAM AND
PAGE YA142 FOR TIMING CHART

AN4 A-A1A2D05 03A-A1B2D02
03A-A1B2D05 BD4 A-A1A2B03
AP4 A-A1A2D06 03A-A1B2B03
03A-A1B2D06
AQ4 A-A1A2D07
03A-A1B2D07
AR4 A-A1A2D09

02-17-65 415480
04-13-65 415480C
07-20-65 415482
10-21-65 415492
03-08-66 415754B
08-10-66 419621
11-18-66 419621B

PRINTER OPERATORS SWITCHES
DATE 11-10-66 MACH. 1132
LOG 314M FRAME 03
P.No 2201162

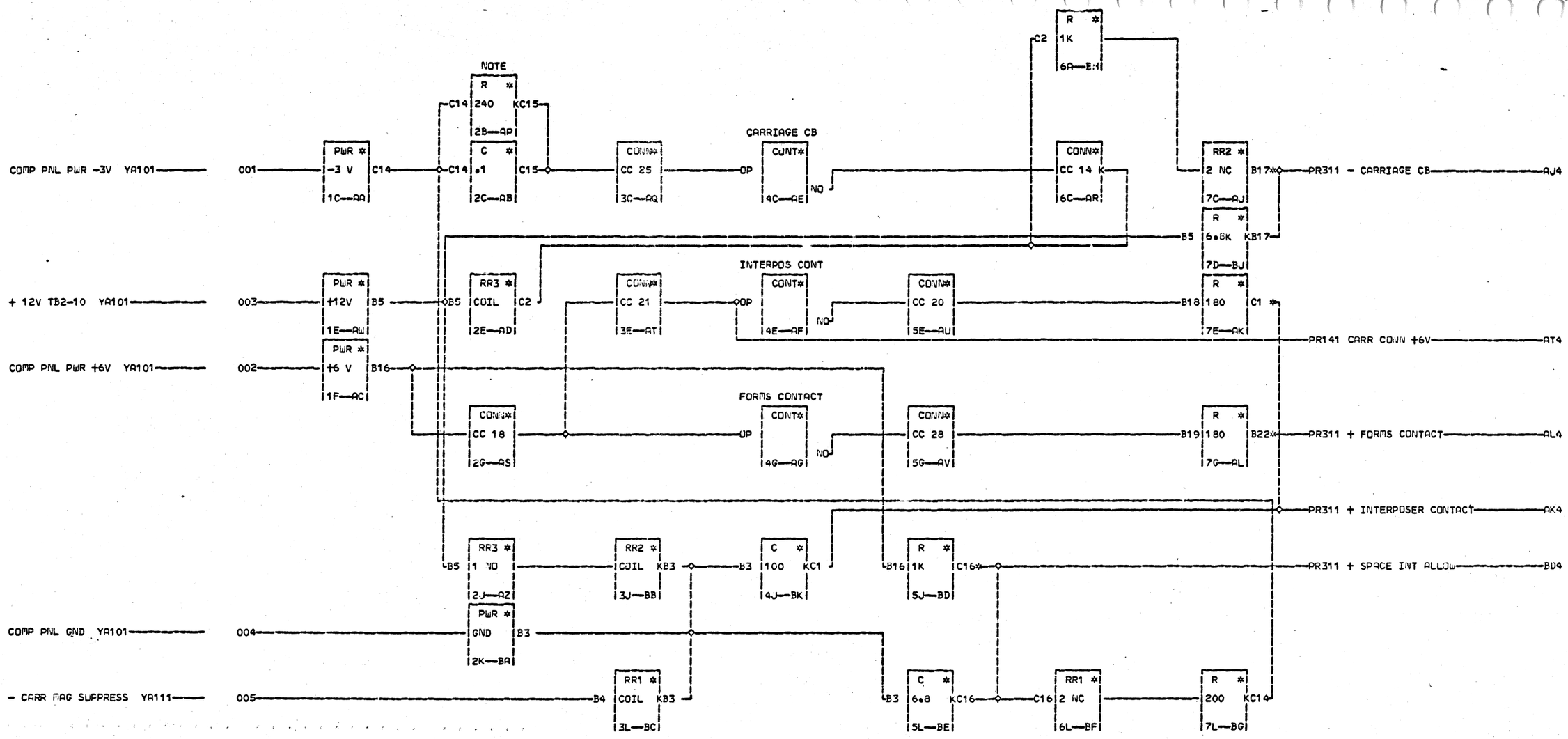

NOTE SEE PAGE YA141
FOR CKT DIAGRAM AND
PAGE YA142 FOR TIMING CHART

P R 1 3 1 000

AJ4 A-A1A2D10
03A-A1B2D10
AK4 A-A1A2D11
03A-A1B2D11
AL4 A-A1A2D12
03A-A1B2D12
BD4 A-A1A2D13
03A-A1B2D13

02-17-65 415480
04-13-65 415480C
07-20-65 415482
10-21-65 415492
01-17-66 415768
08-10-66 419621
10-03-66 419621A
11-18-66 419621B
12-15-66 419634
09-07-67 131261

PRINTER CARRIAGE CONTACTS

DATE 09-14-67 MACH. 1132

LOG 1186 FRAME 03

P.N. 2201163

IBM CORP. GPD BLK. BL

P R 1 3 1 000

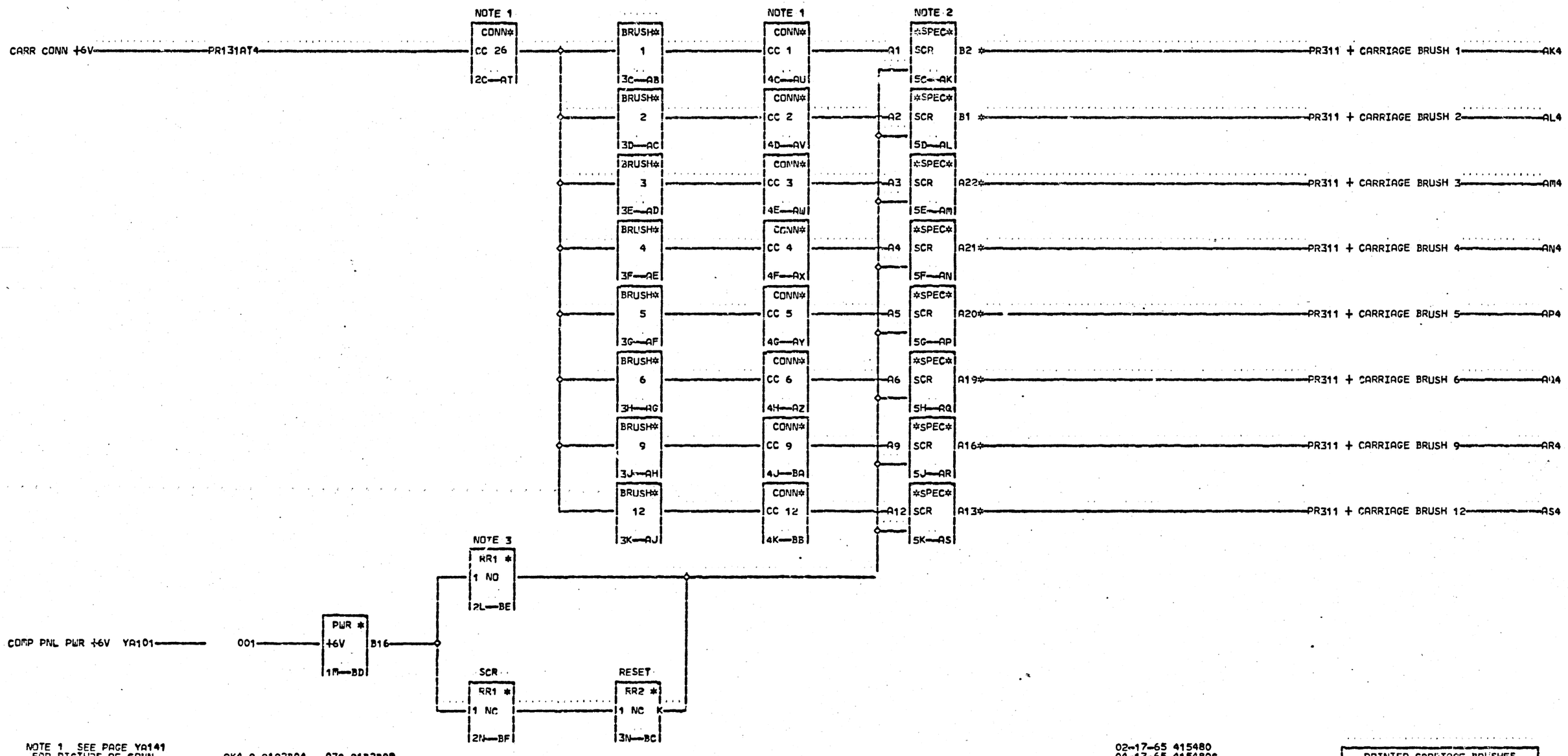

NOTE 1 SEE PAGE YA141
FOR PICTURE OF CONN
P NOTE 2 SEE PAGE YA141
R FOR CKT DIAGRAM AND
1 PAGE YA142 FOR TIMING CHART
4 NOTE 3 USED TO RESET
1 SCR LATCHES

AK4 A—A1A2B04 03A—A1B2B09
03A—A1B2B04 AQ4 A—A1A2B10
AL4 A—A1A2B05 03A—A1B2B10
03A—A1B2B05 AR4 A—A1A2B12
AM4 A—A1A2B07 03A—A1B2B12
03A—A1B2B07 AS4 A—A1A2B13
AN4 A—A1A2B08 03A—A1B2B13

02-17-65 415480
04-13-65 415480C
07-20-65 415482
10-21-65 415492
08-10-66 419621
11-18-66 419621B

PRINTER CARRIAGE BRUSHES
DATE 11-10-66 MACH. 1132
LOG 314M FRAME 03
P.No. 2201164

P R 1 4 1 000

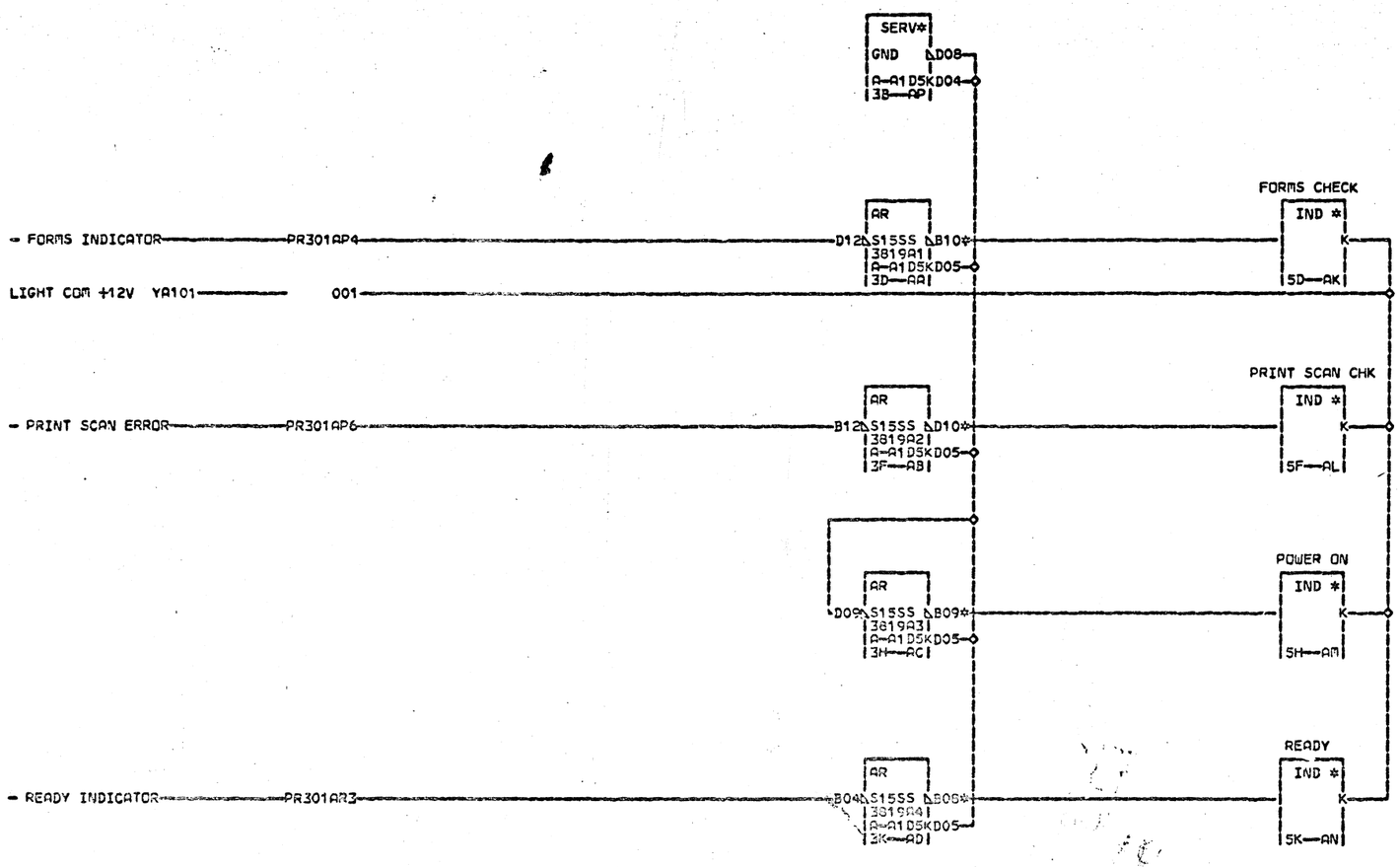

AA4 A-A1A4B02
AB4 A-A1A4B03
AC4 A-A1A4B04
AD4 A-A1A4B05

02-17-65 415480
03-04-65 415480A
04-13-65 415480C
07-20-65 415482
08-24-68 131289

PRINTER INDICATORS AND DRIVERS
DATE 08-21-68 MACH. 1132
LOG 1271 FRAME 03
P.N. 2201165
IBM CORP. GPD BLK. AQ

PR151 000

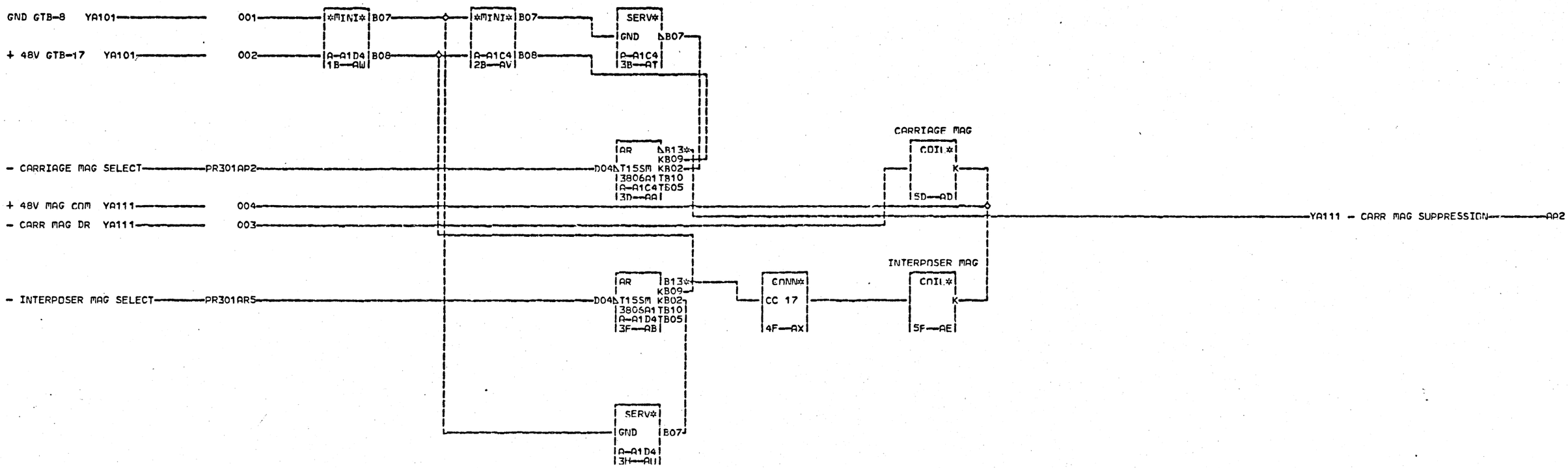

AA2 A-A1A4B12
AF2 A-A1A4B13

02-17-65 415480
03-04-65 415480A
04-13-65 415480C
07-20-65 415482
10-21-65 415492

PRINTER CARRIAGE MAGNETS AND DRIVERS
DATE 10-21-65 MACH. 1132
LOG 294J FRAME 03
P.N. 2201166
IBM CORP. GPD BLK. AY

PR161 000

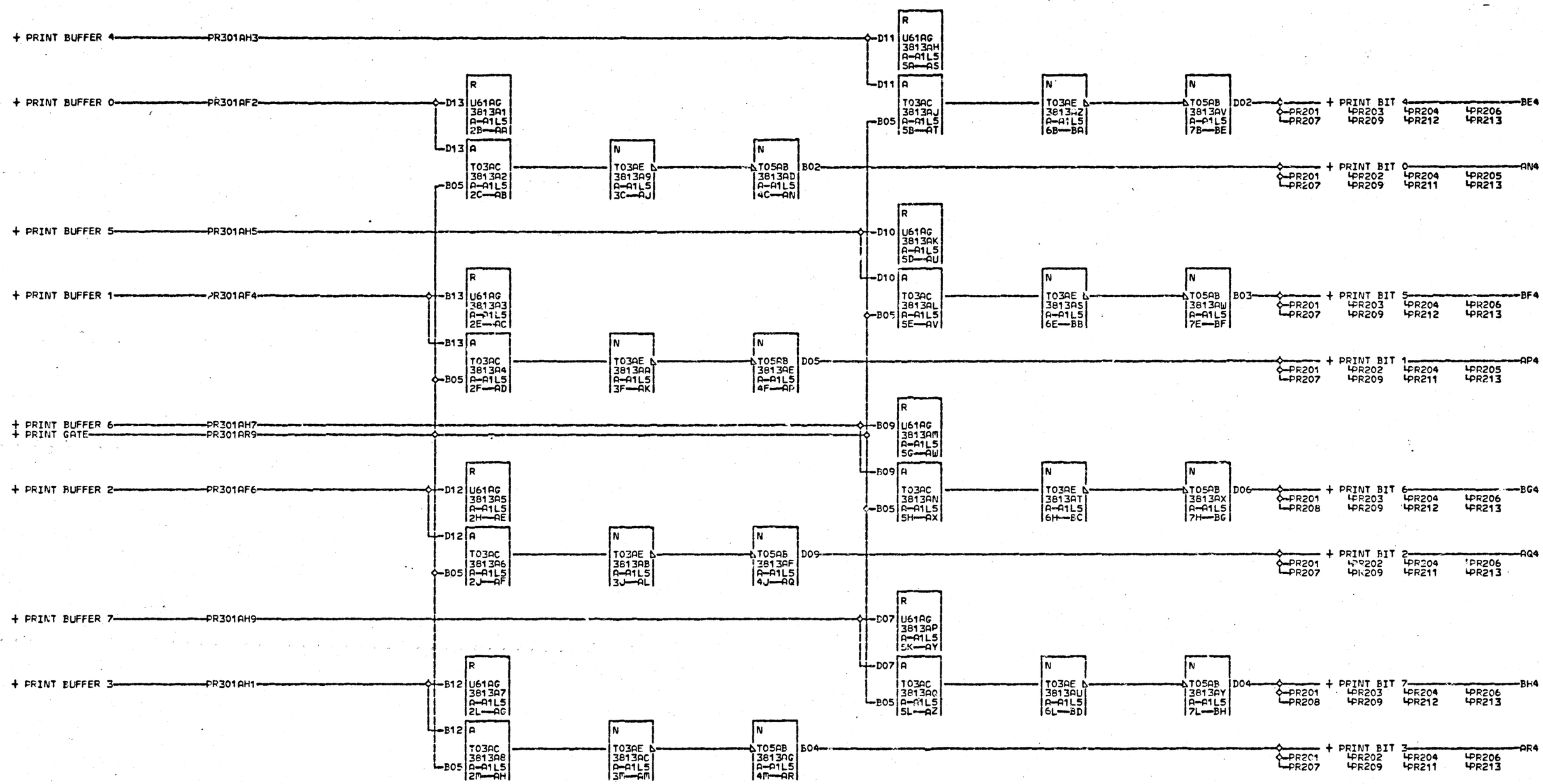

02-17-65 415480
04-13-65 415480C
07-20-65 415482

PRINTER DATA POWERING
BITS 0 - 7
DATE 07-20-65 MACH. 1132
LOG 201F FRAME 03
P.N. 2201167
IBM CORP. GPD BLK. BJ

PR171 000

PR171 000

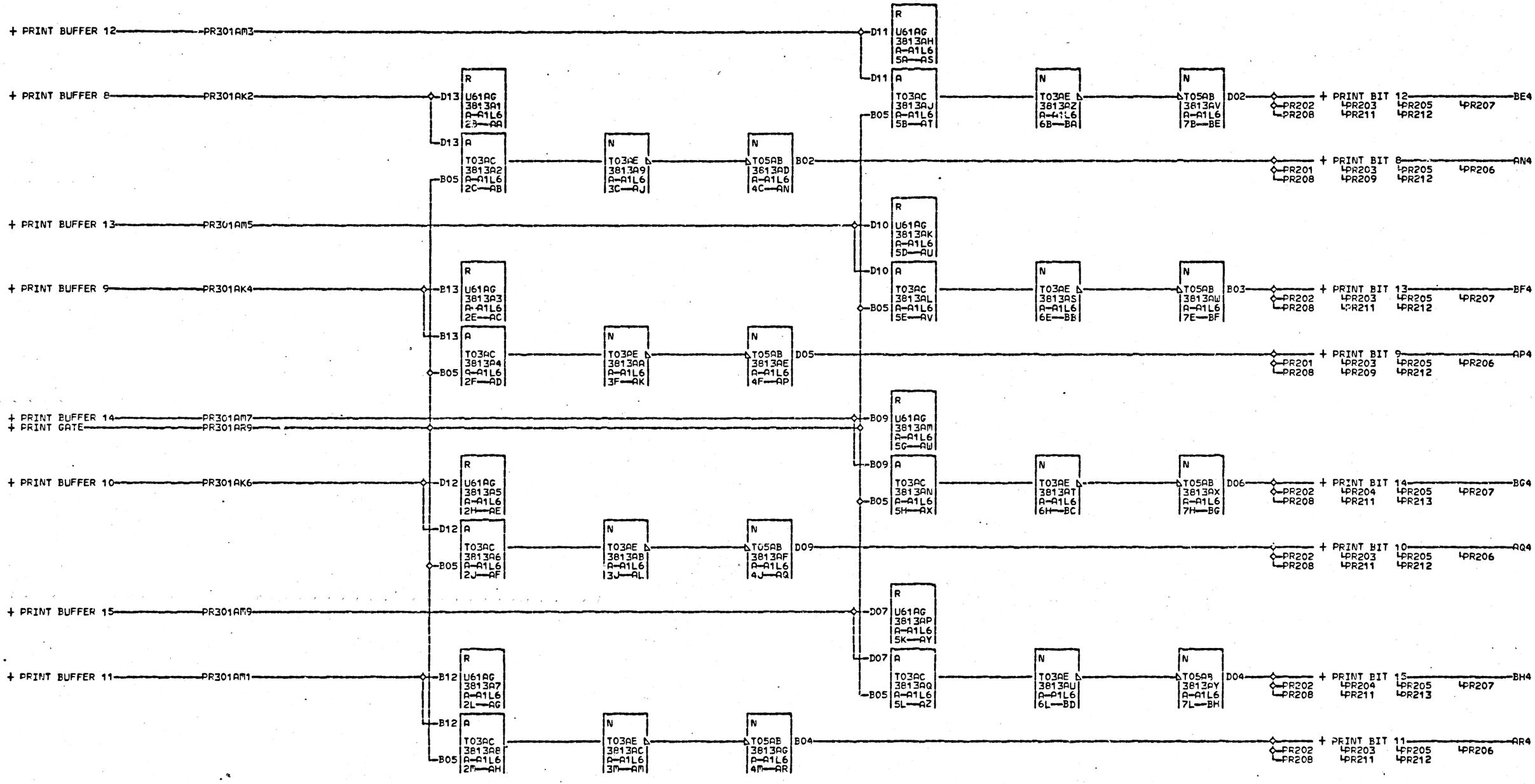

02-17-65 415480
04-13-65 415480C
07-20-65 415482

PRINTER DATA POWERING
BITS 8 - 15
DATE 07-20-65 MACH. 1132
LOG 201F FRAME 03
P.No. 2201168

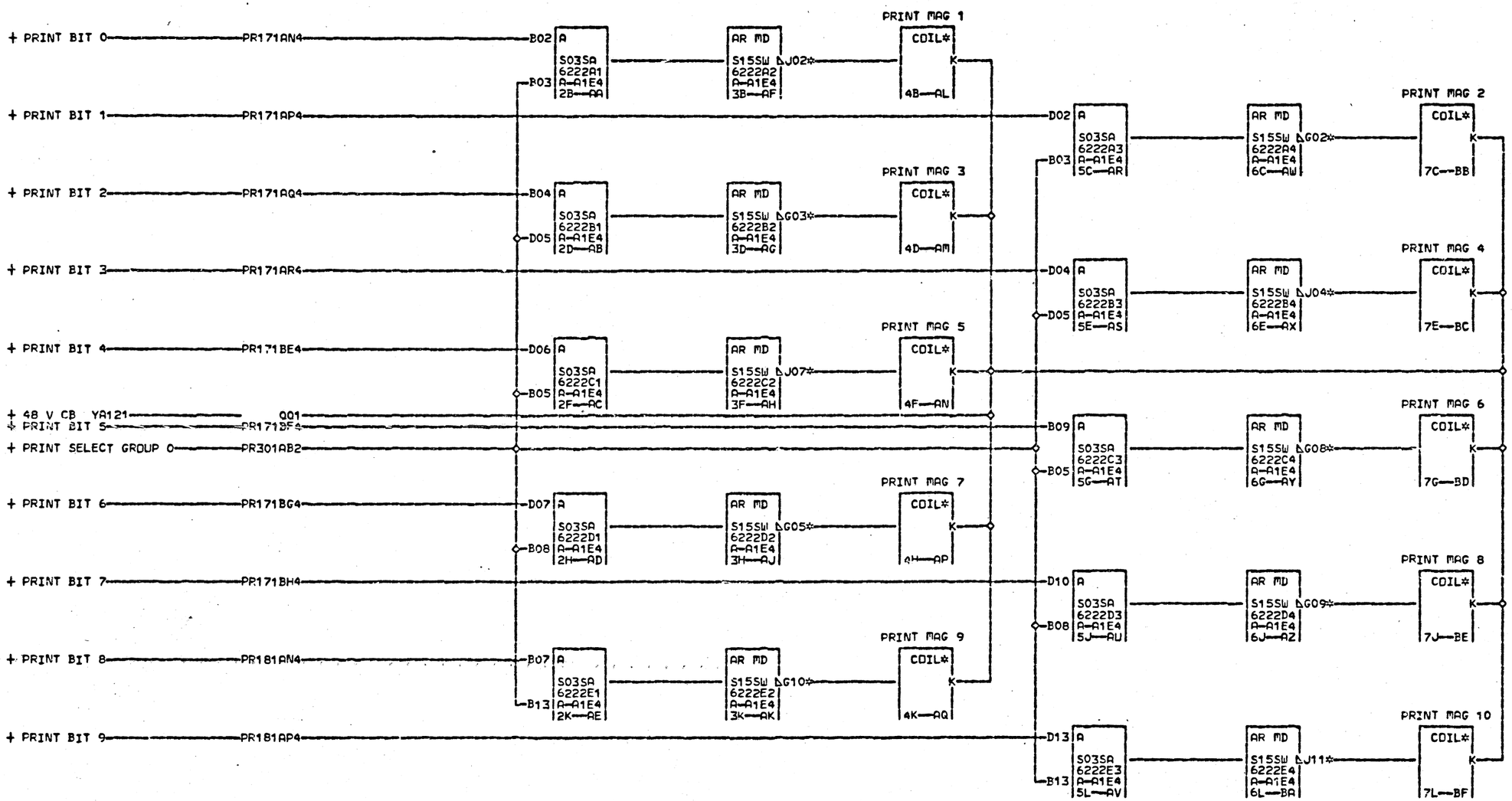

AF4 A-A1A5B02 BA4 A-A1A5B13
AG4 A-A1A5B04
AH4 A-A1A5B07
AJ4 A-A1A5B09
AK4 A-A1A5B12
AL4 A-A1A5B03
AX4 A-A1A5B05
AY4 A-A1A5B08

02-17-65 415480
04-13-65 415480C
07-20-65 415482

PRINT MAGNETS AND DRIVERS
1-10
DATE 07-20-65 MACH. 1132
LOG 201F FRAME 03
P.N. 2201169
IBM CORP. GPD BLK. B6

PR201 000

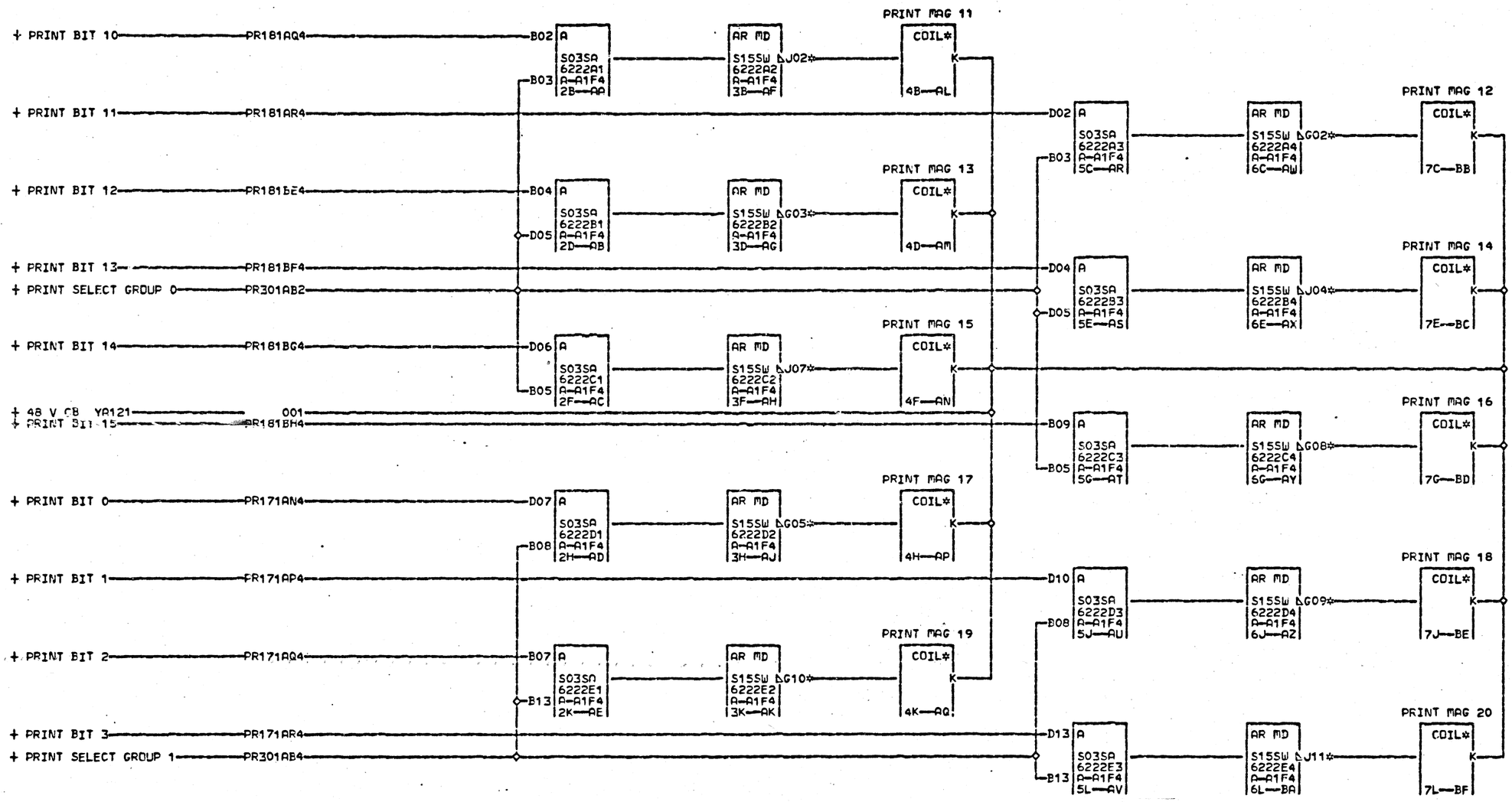

AF4 A-A1A5D02 BA4 A-A1A5D13
AG4 A-A1A5D05
AH4 A-A1A5D07
AJ4 A-A1A5D10
AK4 A-A1A5D12
AW4 A-A1A5D04
AX4 A-A1A5D06
AY4 A-A1A5D09

02-17-65 415480
04-13-65 415480C
07-20-65 415482

PRINT MAGNETS AND DRIVERS
11-20
DATE 07-20-65 MACH. 1132
LOG 201F FRAME 03
P.N. 2201170
IBM CORP. GPD BLK. BG

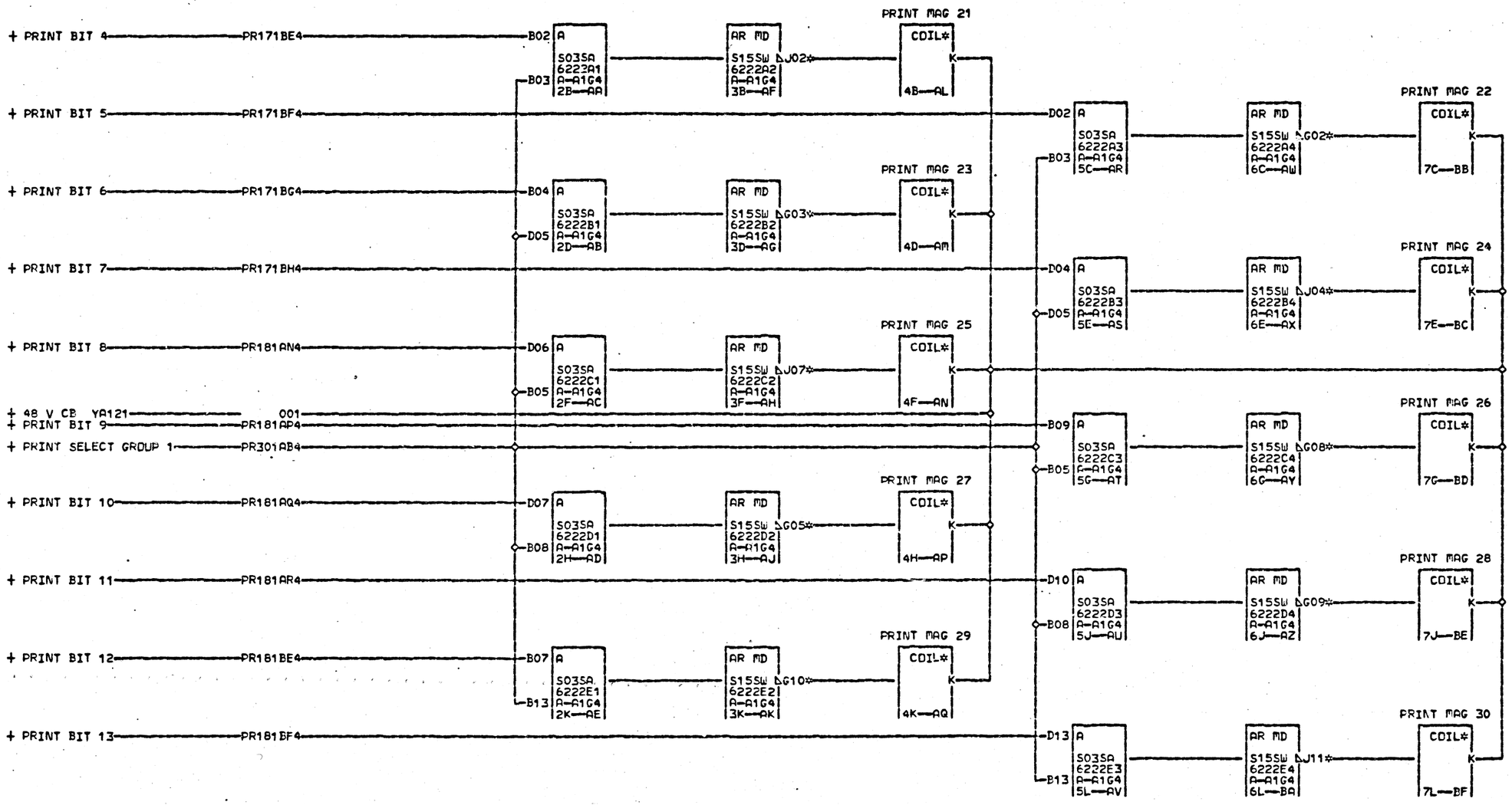

AF4 A-A1B5B02 BA4 A-A1B5B13
AG4 A-A1B5B04
AH4 A-A1B5B07
AJ4 A-A1B5B09
AK4 A-A1B5B12
AW4 A-A1B5B03
AX4 A-A1B5B05
AY4 A-A1B5B08
BZ4 A-A1B5B10

02-17-65 415480
04-13-65 415480C
07-20-65 415482

PRINT MAGNETS AND DRIVERS
21-30
DATE 07-20-65 MACH. 1132
LOG 201F FRAME 03
P.N. 2201171
IBM CORP. GPD BLK. BG

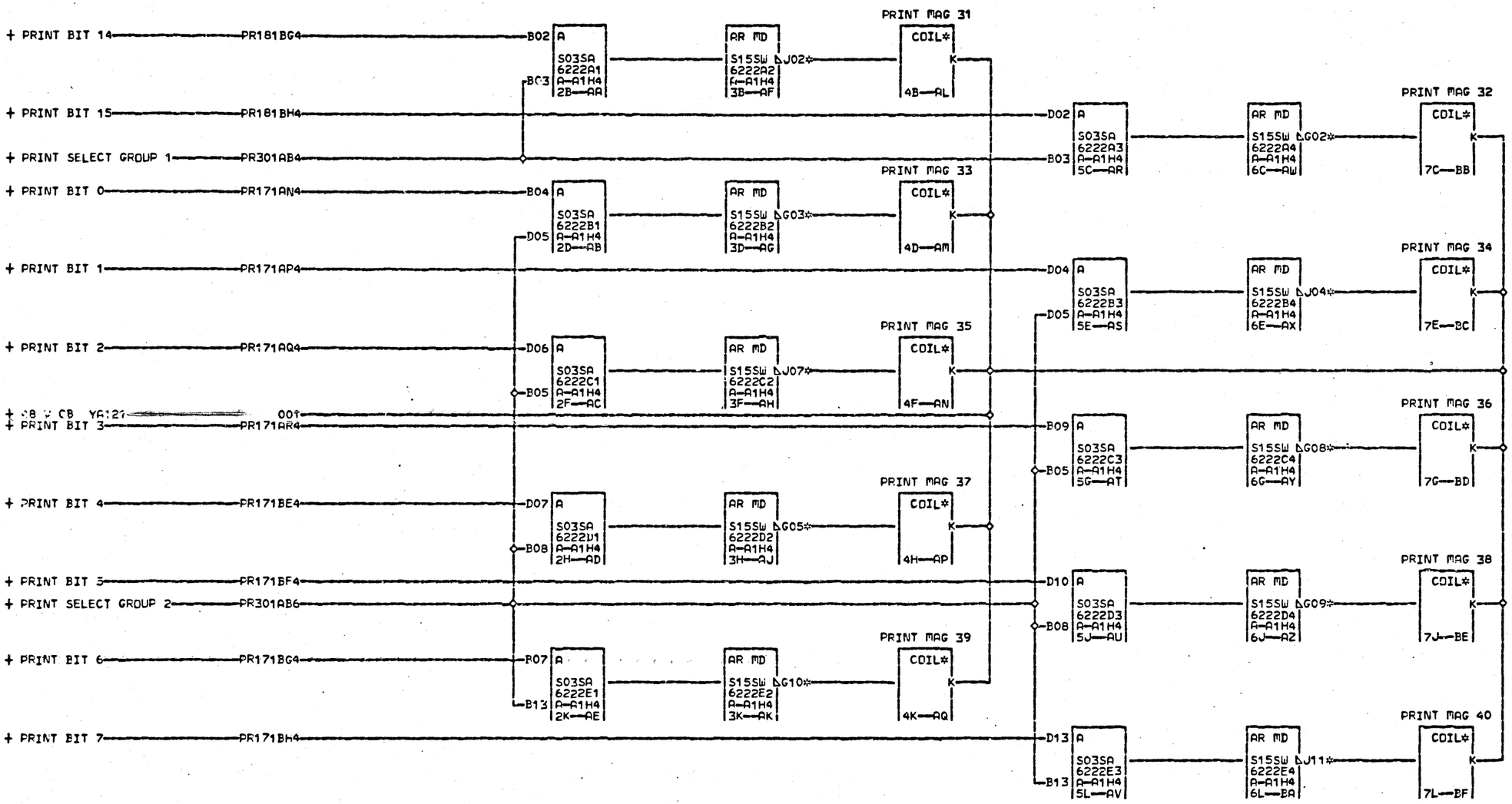

AF4 A-A1B5D02 BA4 A-A1B5D13
AG4 A-A1B5D05
AH4 A-A1B5D07
AJ4 A-A1B5D10
AK4 A-A1B5D12
AL4 A-A1B5D04
AX4 A-A1B5D06

02-17-65 415480
04-13-65 415480C
07-20-65 415482

PRINT MAGNETS AND DRIVERS
31-40
DATE 07-20-65 MACH. 1132
LOG 201F FRAME 03
P.N. 2201172

PR204 000

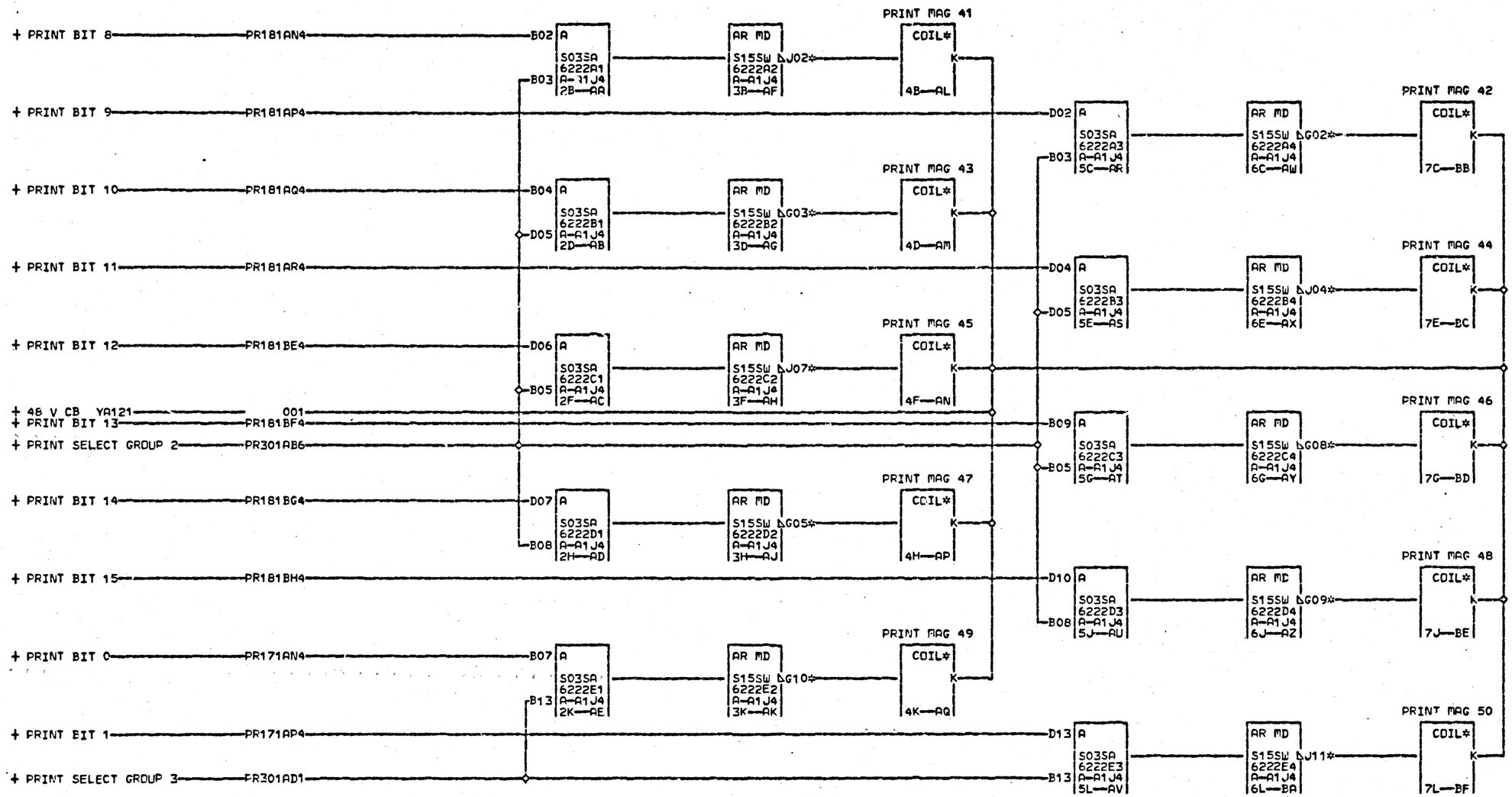

PR205 000

AF4 A-A1A6B02 BA4 A-A1A6B13
AG4 A-A1A6B04
AH4 A-A1A6B07
AJ4 A-A1A6B09
AK4 A-A1A6B12
AW4 A-A1A6B03
AX4 A-A1A6B05
AY4 A-A1A6B08

02-17-65 415480
04-13-65 415480C
07-20-65 415482

PRINT MAGNETS AND DRIVERS
41-50
DATE 07-20-65 MACH. 1132
LDG 201F FRAME 03
P.N. 2201173
IBM CORP. GPD BLK. BG

PR205 000

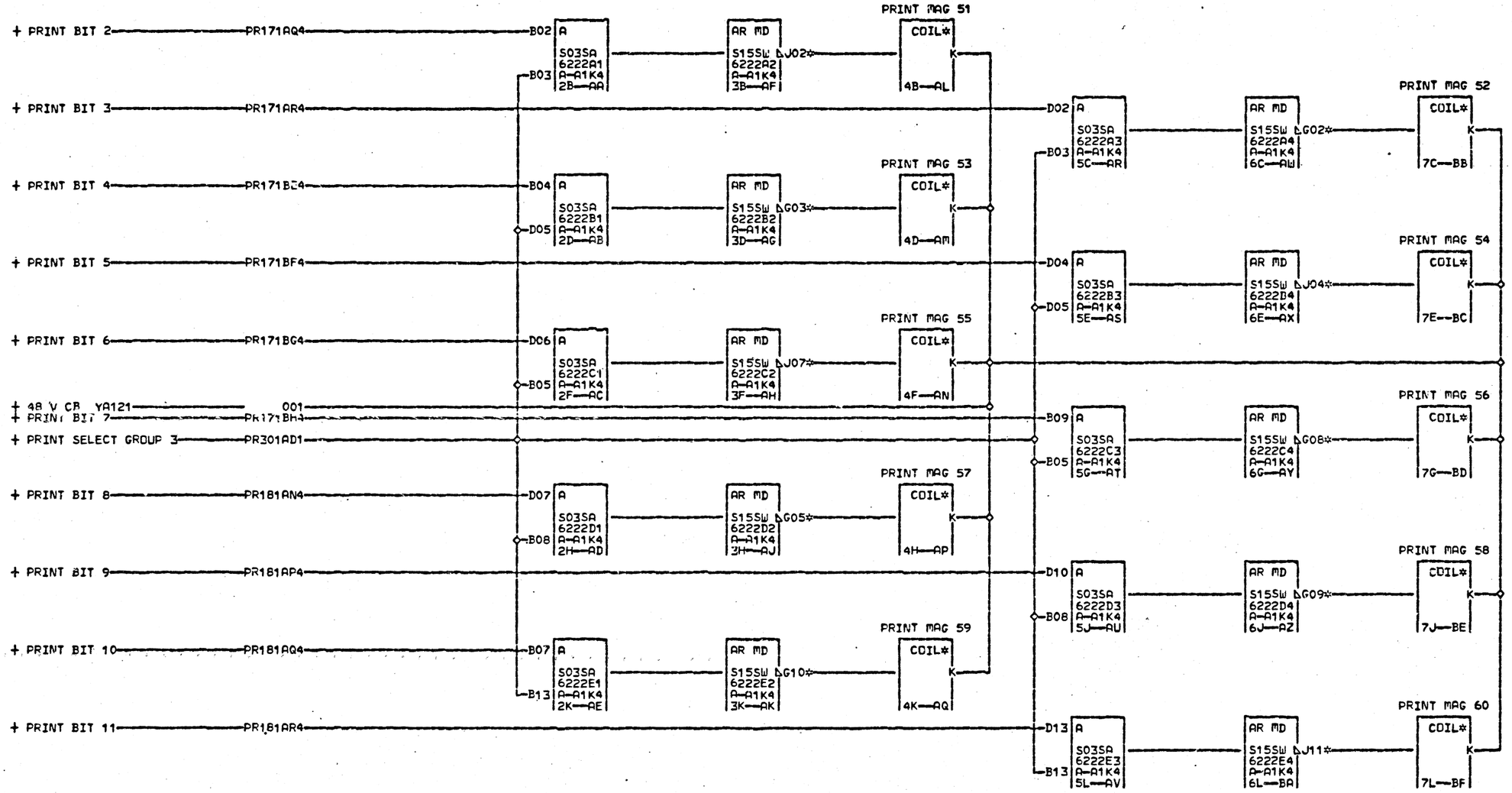

AF4 A-A1A6D02 BA4 A-A1A6D13
AG4 A-A1A6D05
AH4 A-A1A6D07
AJ4 A-A1A6D10
AK4 A-A1A6D12
AW4 A-A1A6D04
AX4 A-A1A6D06

02-17-65 415480
04-13-65 415480C
07-20-65 415482

PRINT MAGNETS AND DRIVERS
51-60
DATE 07-20-65 MACH. 1132
LOG 201F FRAME 03
P.N. 2201174
IBM CORP. GPD BLK. BG

PR206 000

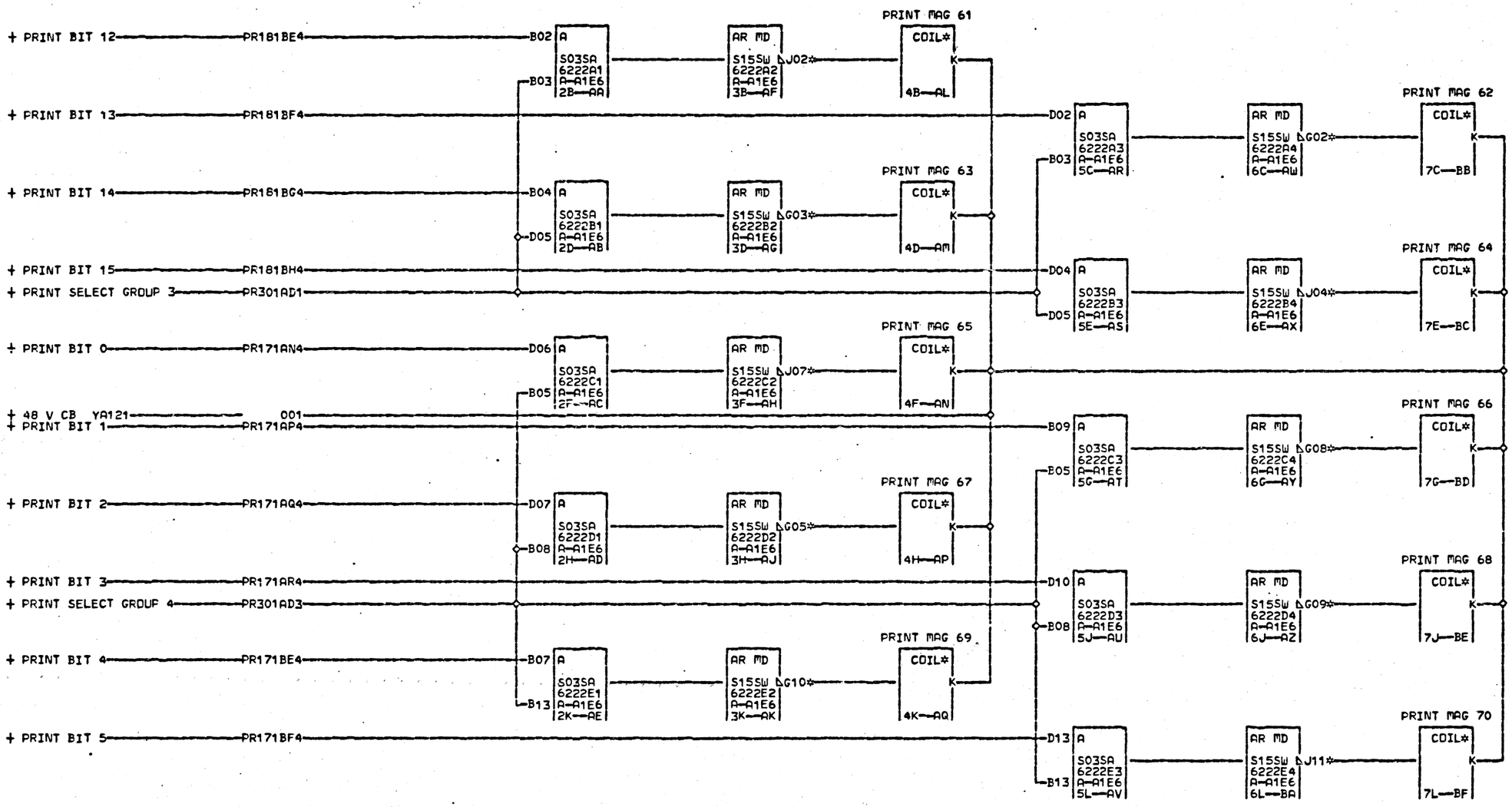

P R 2 0 7 000

AF4 A-A1B6B02 BA4 A-A1B6B13
AG4 A-A1B6B04
AH4 A-A1B6B07
AJ4 A-A1B6B09
AK4 A-A1B6B12
AL4 A-A1B6B03
AX4 A-A1B6B05
AY4 A-A1B6B08
AZ4 A-A1B6B10

02-17-65 415480
04-13-65 415480C
07-20-65 415482

PRINT MAGNETS AND DRIVERS
61-70
DATE 07-20-65 MACH. 1132
LDG 201F FRAME 03
P.N. 2201175
IBM CORP. GPD BLK. BG

P R 2 0 7 000

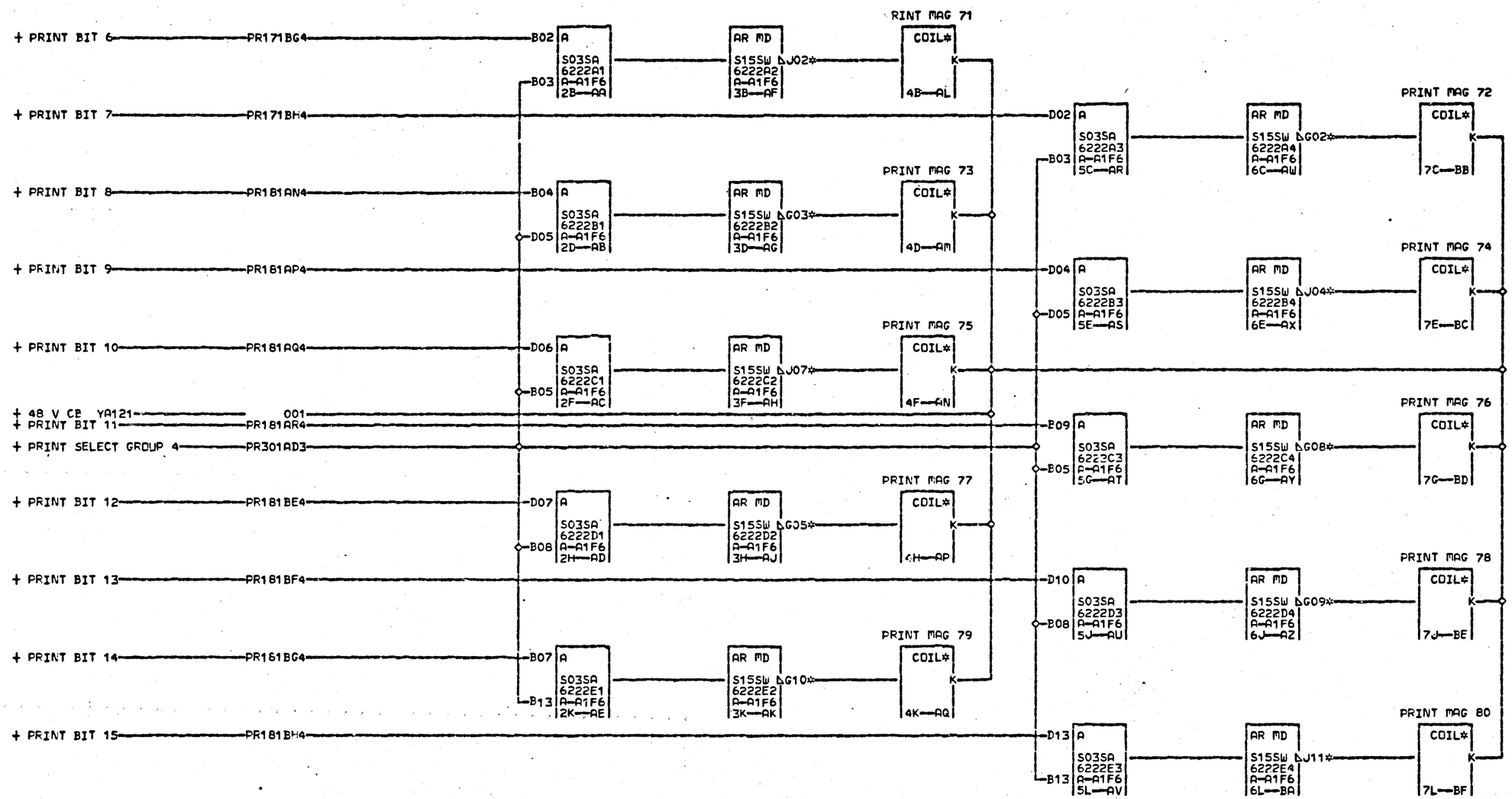

PR2
0
8
000

AF4 A-A1B6D02 BA4 A-A1B6D13
AG4 A-A1B6D05
AH4 A-A1B6D07
AJ4 A-A1B6D10
AK4 A-A1B6D12
AL4 A-A1B6D04
AX4 A-A1B6D06
AY4 A-A1B6D09
AZ4 A-A1B6D11

02-17-65 415480
04-13-65 415480C
07-20-65 415482

PRINT MAGNETS AND DRIVERS
71-80
DATE 07-20-65 MACH. 1132
LDG 201F FRAME 03
P.N. 2201176
IBM CORP. GPD BLK. EG

PR2
0
8
000

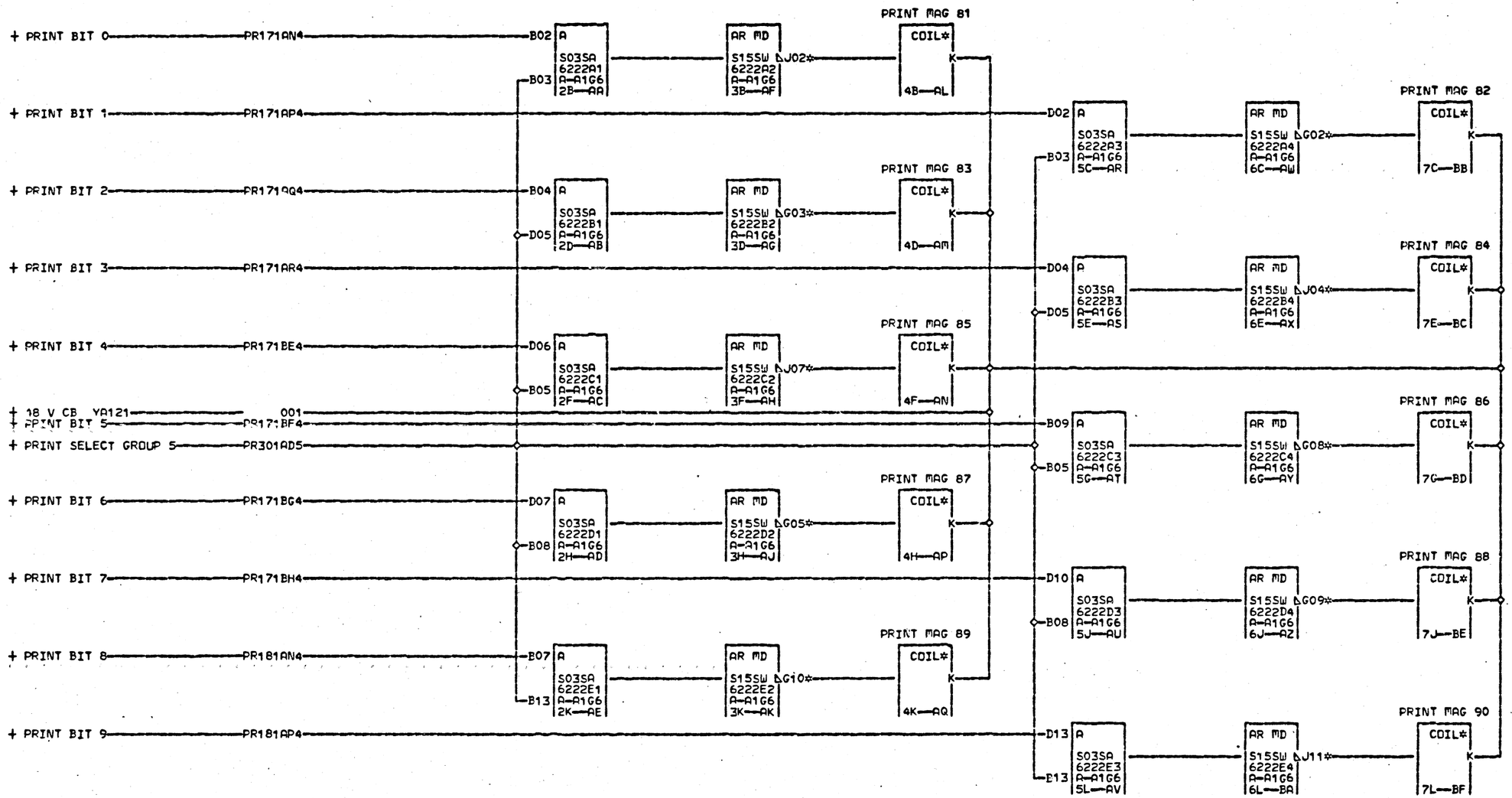

AF4 A-A1A7B02 BA4 A-A1A7B13
AG4 A-A1A7B04
AH4 A-A1A7B07
AJ4 A-A1A7B09
AK4 A-A1A7B12
AW4 A-A1A7B03
AX4 A-A1A7B05
AY4 A-A1A7B08
AZ4 A-A1A7B10

02-17-65 415480
04-13-65 415480C
07-20-65 415482

PRINT MAGNETS AND DRIVERS
81-90
DATE 07-20-65 MACH. 1132
LOG 201F FRAME 03
P.N. 2201177
IBM CORP. GPD BLK. BG

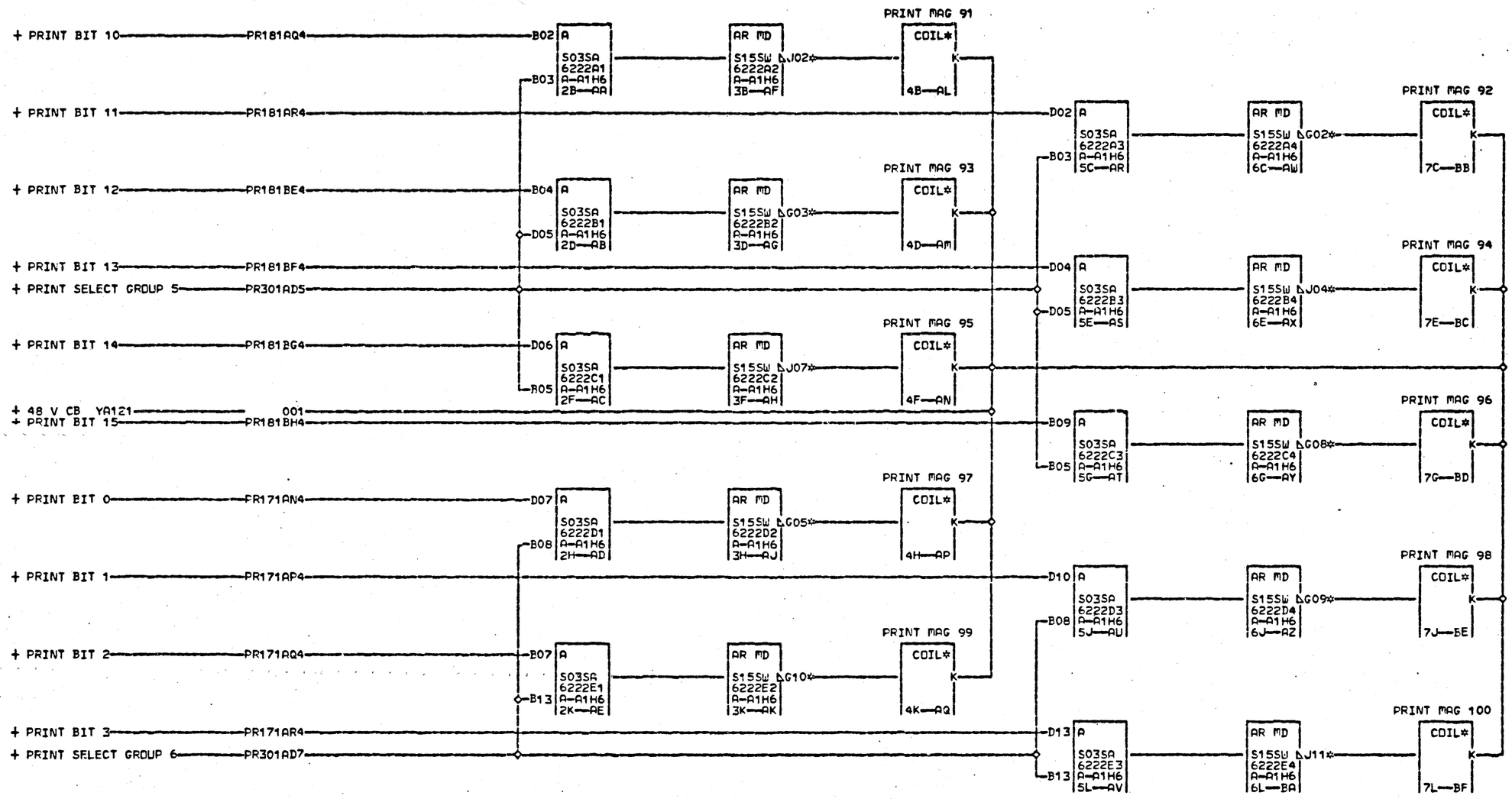

P R 2 1 1 000

AF4 A-A1A7D02 BA4 A-A1A7D13
AG4 A-A1A7D05
AH4 A-A1A7D07
AJ4 A-A1A7D10
AK4 A-A1A7D12
AL4 A-A1A7D04
AX4 A-A1A7D06
AY4 A-A1A7D09
AZ4 A-A1A7D11

02-17-65 415480
04-13-65 415480C
07-20-65 415482

PRINT MAGNETS AND DRIVERS
91-100
DATE 07-20-65 MACH. 1132
LOG 201F FRAME 03
P.N. 2201178
IBM CORP. GPD BLK. BG

P R 2 1 1 000

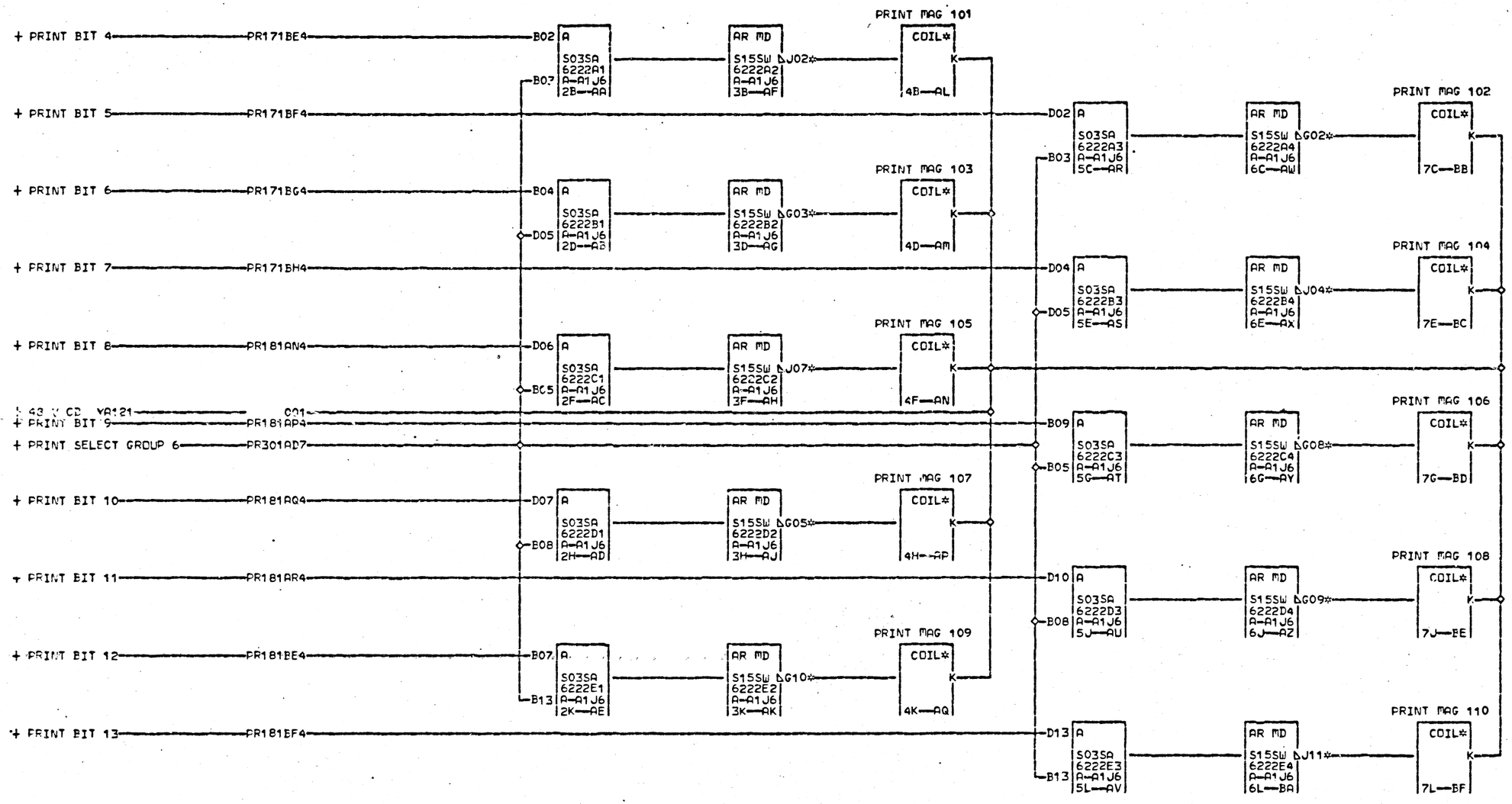

P
R
2
1
2

AF4 A-A1B7B02 BA4 A-A1B7B13
AG4 A-A1B7B04
AH4 A-A1B7B07
AJ4 A-A1B7B09
AK4 A-A1B7B12
AL4 A-A1B7B03
AX4 A-A1B7B05

02-17-65 415480
04-13-65 415480C
07-20-65 415482

PRINT MAGNETS AND DRIVERS
101-110
DATE 07-20-65 MACH. 1132
LOG 201F FRAME 03
P.N. 2201179

P
R
2
1
2
000

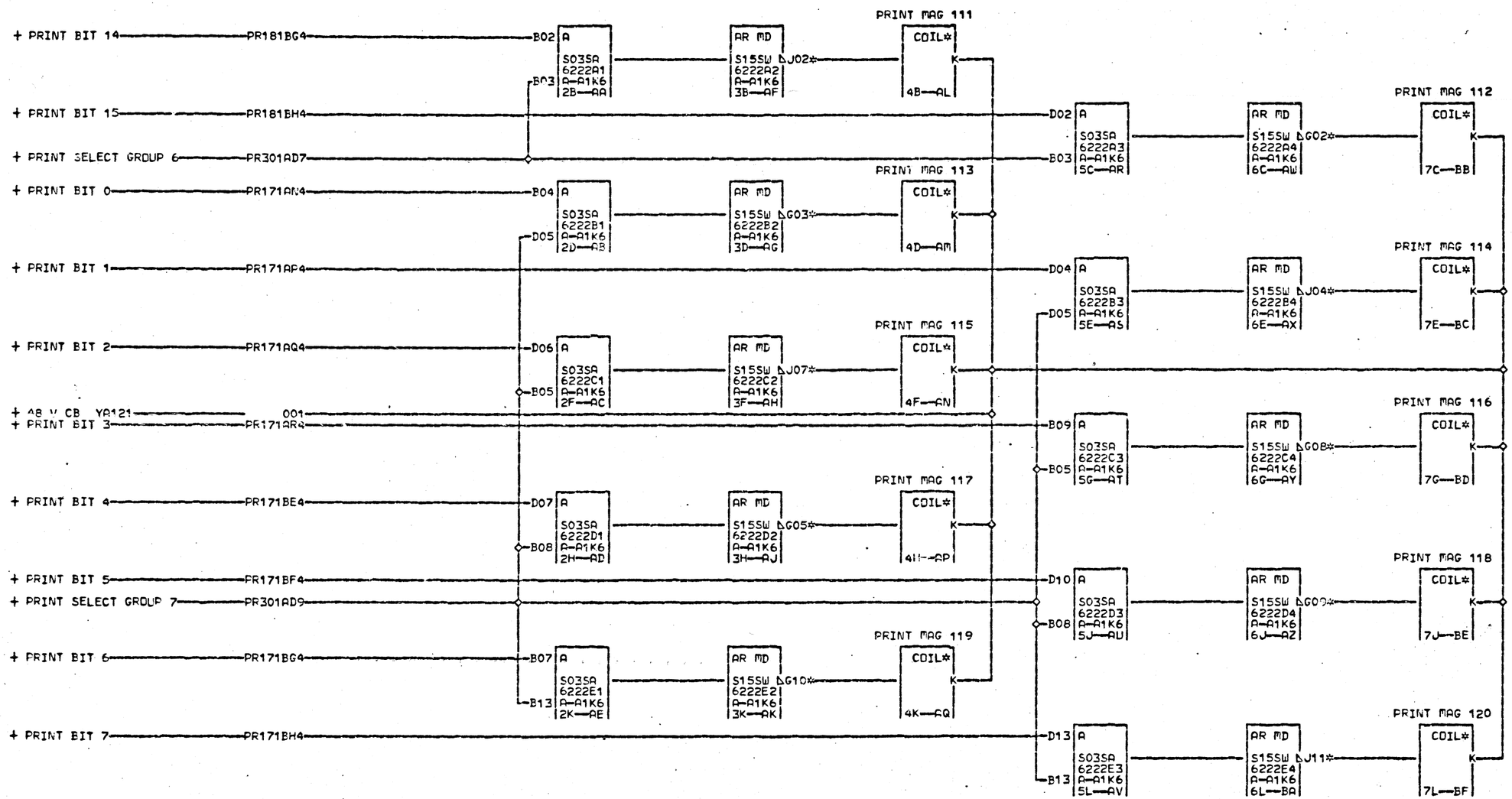

PR213

BF4 A-A1B7D02 BA4 A-A1B7D13
BG4 A-A1B7D05
BH4 A-A1B7D07
BJ4 A-A1B7D10
BK4 A-A1B7D12
BL4 A-A1B7D04
BX4 A-A1B7D06

02-17-65 415480
04-13-65 415480C
07-20-65 415482

PRINT MAGNETS AND DRIVERS
111-120
DATE 07-20-65 MACH. 1132
LOG 201F FRAME 03
P.N. 2201180
IBM CORP. GPD BLK. BG

PR213 000

+ PRINT SELECT GROUP 0	XP341AB2	*ENTR* FROM 1131 TO 1132 5A—AB		PR201	PR202	+ PRINT SELECT GROUP 0 — AB2
+ PRINT SELECT GROUP 1	XP341AB4			PR202	PR203 PR204	+ PRINT SELECT GROUP 1 — AB4
+ PRINT SELECT GROUP 2	XP341AB6			PR204	PR205	+ PRINT SELECT GROUP 2 — AB6
+ PRINT SELECT GROUP 3	XP341AD1	*ENTR* FROM 1131 TO 1132 5B—AD		PR205	PR206 PR207	+ PRINT SELECT GROUP 3 — AD1
+ PRINT SELECT GROUP 4	XP341AD3			PR207	PR208	+ PRINT SELECT GROUP 4 — AD3
+ PRINT SELECT GROUP 5	XP341AD5			PR209	PR211	+ PRINT SELECT GROUP 5 — AD5
+ PRINT SELECT GROUP 6	XP341AD7			PR211	PR212 PR213	+ PRINT SELECT GROUP 6 — AD7
+ PRINT SELECT GROUP 7	XP341AD9			PR213		+ PRINT SELECT GROUP 7 — AD9
+ PRINT BUFFER 0	XP341AF2	*ENTR* FROM 1131 TO 1132 5D—AF		PR171		+ PRINT BUFFER 0 — AF2
+ PRINT BUFFER 1	XP341AF4			PR171		+ PRINT BUFFER 1 — AF4
+ PRINT BUFFER 2	XP341AF6			PR171		+ PRINT BUFFER 2 — AF6
+ PRINT BUFFER 3	XP341AH1	*ENTR* FROM 1131 TO 1132 5E—AH		PR171		+ PRINT BUFFER 3 — AH1
+ PRINT BUFFER 4	XP341AH3			PR171		+ PRINT BUFFER 4 — AH3
+ PRINT BUFFER 5	XP341AH5			PR171		+ PRINT BUFFER 5 — AH5
+ PRINT BUFFER 6	XP341AH7			PR171		+ PRINT BUFFER 6 — AH7
+ PRINT BUFFER 7	XP341AH9			PR171		+ PRINT BUFFER 7 — AH9
+ PRINT BUFFER 8	XP341AK2	*ENTR* FROM 1131 TO 1132 5G—AK		PR181		+ PRINT BUFFER 8 — AK2
+ PRINT BUFFER 9	XP341AK4			PR181		+ PRINT BUFFER 9 — AK4
+ PRINT BUFFER 10	XP341AK6			PR181		+ PRINT BUFFER 10 — AK6
+ PRINT BUFFER 11	XP341AM1	*ENTR* FROM 1131 TO 1132 5H—AM		PR181		+ PRINT BUFFER 11 — AM1
+ PRINT BUFFER 12	XP341AM3			PR181		+ PRINT BUFFER 12 — AM3
+ PRINT BUFFER 13	XP341AM5			PR181		+ PRINT BUFFER 13 — AM5
+ PRINT BUFFER 14	XP341AM7			PR181		+ PRINT BUFFER 14 — AM7
+ PRINT BUFFER 15	XP341AM9			PR181		+ PRINT BUFFER 15 — AM9
- CARRIAGE MAG SELECT	XP341AP2	*ENTR* FROM 1131 TO 1132 5K—AP		PR161		- CARRIAGE MAG SELECT — AP2
- FORMS INDICATOR	XP341AP4			PR151		- FORMS INDICATOR — AP4
- PRINT SCAN ERROR	XP341AP6			PR151		- PRINT SCAN ERROR — AP6
- READY INDICATOR	XP341AR3	*ENTR* FROM 1131 TO 1132 5L—AR		PR151		- READY INDICATOR — AR3
- INTERPOSER MAG SELECT	XP341AR5			PR161		- INTERPOSER MAG SELECT — AR5
- USE METER SELECT	XP341AR7			YA111		- USE METER SELECT — AR7
+ PRINT GATE	XP341AR9			PR171	PR181	+ PRINT GATE — AR9

AB2 A—A1N4D10 AF4 A—A1N5D02 AK6 A—A1N5B08 AR3 A—A1N4D06
AB4 A—A1N4D11 AF6 A—A1N5B03 AM1 A—A1N5D09 AR5 A—A1N4D09
AB6 A—A1N4D12 AH1 A—A1N5D04 AM3 A—A1N5B09 AR7 A—A1A2D04
AD1 A—A1N4D13 AH3 A—A1N5B04 AM5 A—A1N5D10 03A—A1B2D04
AD3 A—A1N5B12 AH5 A—A1N5D05 AM7 A—A1N5B10 AR9 A—A1N4B13
AD5 A—A1N5B13 AH7 A—A1N5B05 AM9 A—A1N5D11
AD7 A—A1N5D12 AH9 A—A1N5D06 AP2 A—A1N4D07
AD9 A—A1N5D13 AK2 A—A1N5B07 AP4 A—A1N4D02
AF2 A—A1N5B02 AK4 A—A1N5D07 AP6 A—A1N4D04

04-13-65 415480C
10-21-63 415492
08-24-68 131289

PRINTER ENTRY
DATE 08-21-68 MACH. 1132
LOG 1271 FRAME 03
P.N. 2201223
IBM CORP. GPD BLK. AS

+ PRINT DISC BIT 0	PR101AQ9	*EXIT* FROM 1132 TO 1131 3E—AB	XP331	+ PRINT DISC BIT 0 — AB2
+ PRINT DISC BIT 1	PR101AG9		XP331	+ PRINT DISC BIT 1 — AB4
+ PRINT DISC BIT 2	PR101AR9		XP331	+ PRINT DISC BIT 2 — AB6
+ PRINT DISC BIT 3	PR101AH9	*EXIT* FROM 1132 TO 1131 3C—AD	XP331	+ PRINT DISC BIT 3 — AD1
+ PRINT DISC BIT 4	PR101AS9		XP331	+ PRINT DISC BIT 4 — AD3
+ PRINT DISC BIT 5	PR101AJ9		XP331	+ PRINT DISC BIT 5 — AD5
+ PRINT DISC BIT 6	PR101AT9		XP331	+ PRINT DISC BIT 6 — AD7
+ PRINT DISC BIT 7	PR101AK9		XP331	+ PRINT DISC BIT 7 — AD9

+ CARRIAGE BRUSH 1	PR141AK9	*EXIT* FROM 1132 TO 1131 3E—AF	XP331	+ CARRIAGE BRUSH 1 — AF2
+ CARRIAGE BRUSH 2	PR141AL9		XP331	+ CARRIAGE BRUSH 2 — AF4
+ CARRIAGE BRUSH 3	PR141AM9		XP331	+ CARRIAGE BRUSH 3 — AF6
+ CARRIAGE BRUSH 4	PR141AN9	*EXIT* FROM 1132 TO 1131 3F—AH	XP331	+ CARRIAGE BRUSH 4 — AH1
+ CARRIAGE BRUSH 5	PR141AP9		XP331	+ CARRIAGE BRUSH 5 — AH3
+ CARRIAGE BRUSH 6	PR141AQ9		XP331	+ CARRIAGE BRUSH 6 — AH5
+ CARRIAGE BRUSH 9	PR141AR9		XP331	+ CARRIAGE BRUSH 9 — AH7
+ CARRIAGE BRUSH 12	PR141AS9		XP331	+ CARRIAGE BRUSH 12 — AH9

+ PRINTER START KEY	PR121BC9	*EXIT* FROM 1132 TO 1131 3H—AK	XP331	+ START KEY — AK2
+ PRINTER STOP KEY	PR121BD9		XP331	+ STOP KEY — AK4
+ FORMS CONTACT	PR131AL9		XP331	+ FORMS CONTACT — AK6
+ INTERPOSER CONTACT	PR131AK9	*EXIT* FROM 1132 TO 1131 3J—AM	XP331	+ INTERPOSER CONTACT — AM1
+ CB CLOCK YH121	001*		XP331	+ CB CLOCK — AM3
+ PRINTER MOTOR ON SWITCH	PR121AR9		XP331	+ MOTOR ON SW — AM5
+ CARRIAGE STOP SW	PR121AQ9		XP331	+ CARRIAGE STOP SW — AM7
+ CARRIAGE RESTORE SW	PR121AP9		XP331	+ CARRIAGE RESTORE S_ — AM9

- CARRIAGE CB	PR131AJ9	*EXIT* FROM 1132 TO 1131 3L—AP	XP331	- CARRIAGE CB — AP2
+ CARRIAGE SPACE SW	PR121AN9		XP331	+ CARRIAGE SPACE SW — AP4
+ SPACE INT ALLOW	PR131BD9		XP331	+ SPACE INT ALLOW — AP6

P
K
3
1
1
000

001
03H—41R2B02
03H—41N4B02

04-13-65 415480C
10-21-65 415492
08-10-66 419621

PRINTER EXIT
DATE 06-22-66 MACH. 1132
LOG 2345 FRAME 03
P.N. 2201224
IBM CORP. GPD BLK. RQ

P
K
3
1
1
000

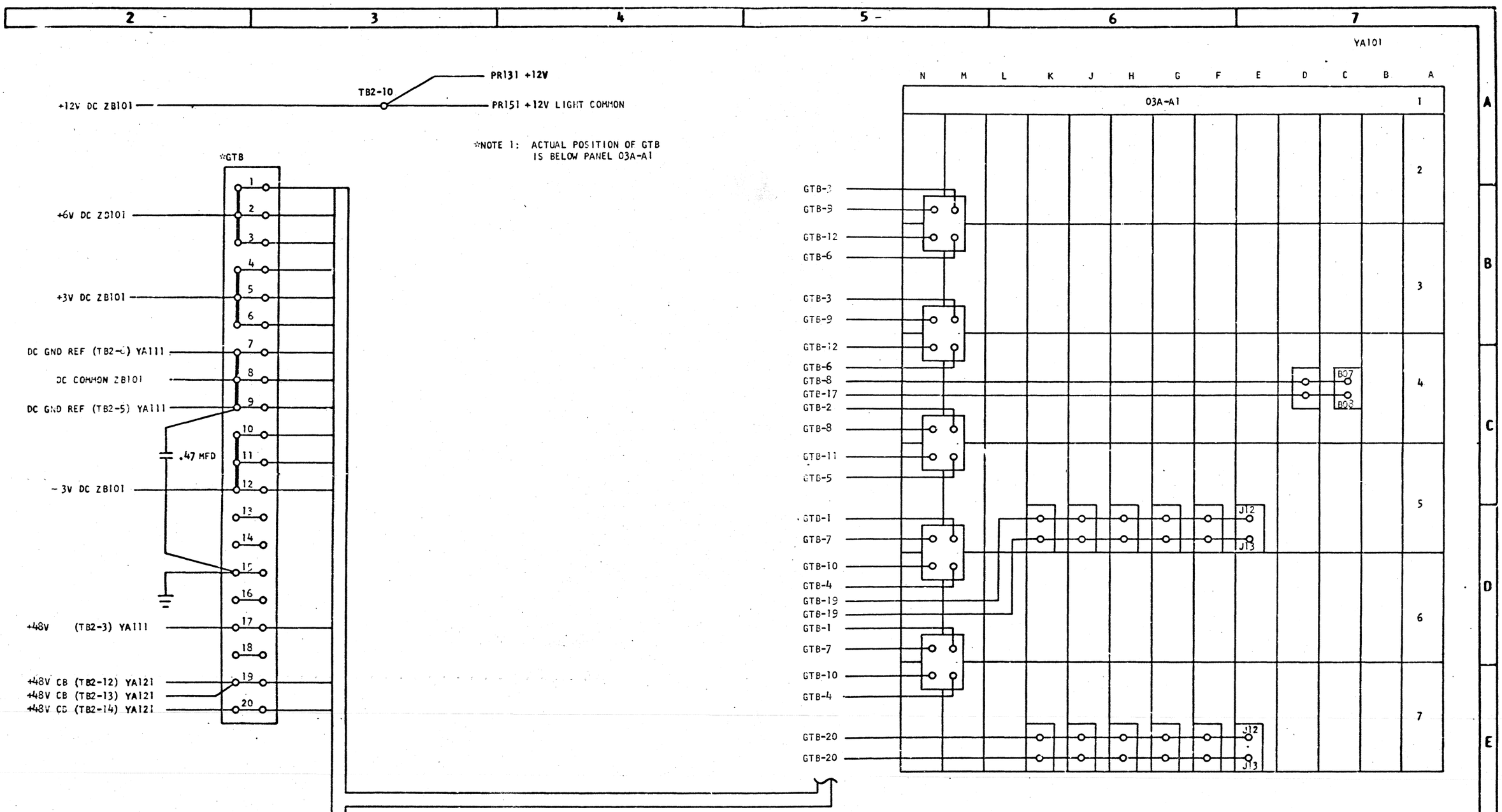

DATE	EC NUMBER	DATE	EC NUMBER
5-7-65	415480C		
SEP65	415482		
DEC 65	415768		
AUG66	419619		
DEC66	419634		

DC POWER DISTRIBUTION

DATE 5-7-65 P N 2201330

TYPE 1132

IBM YA101

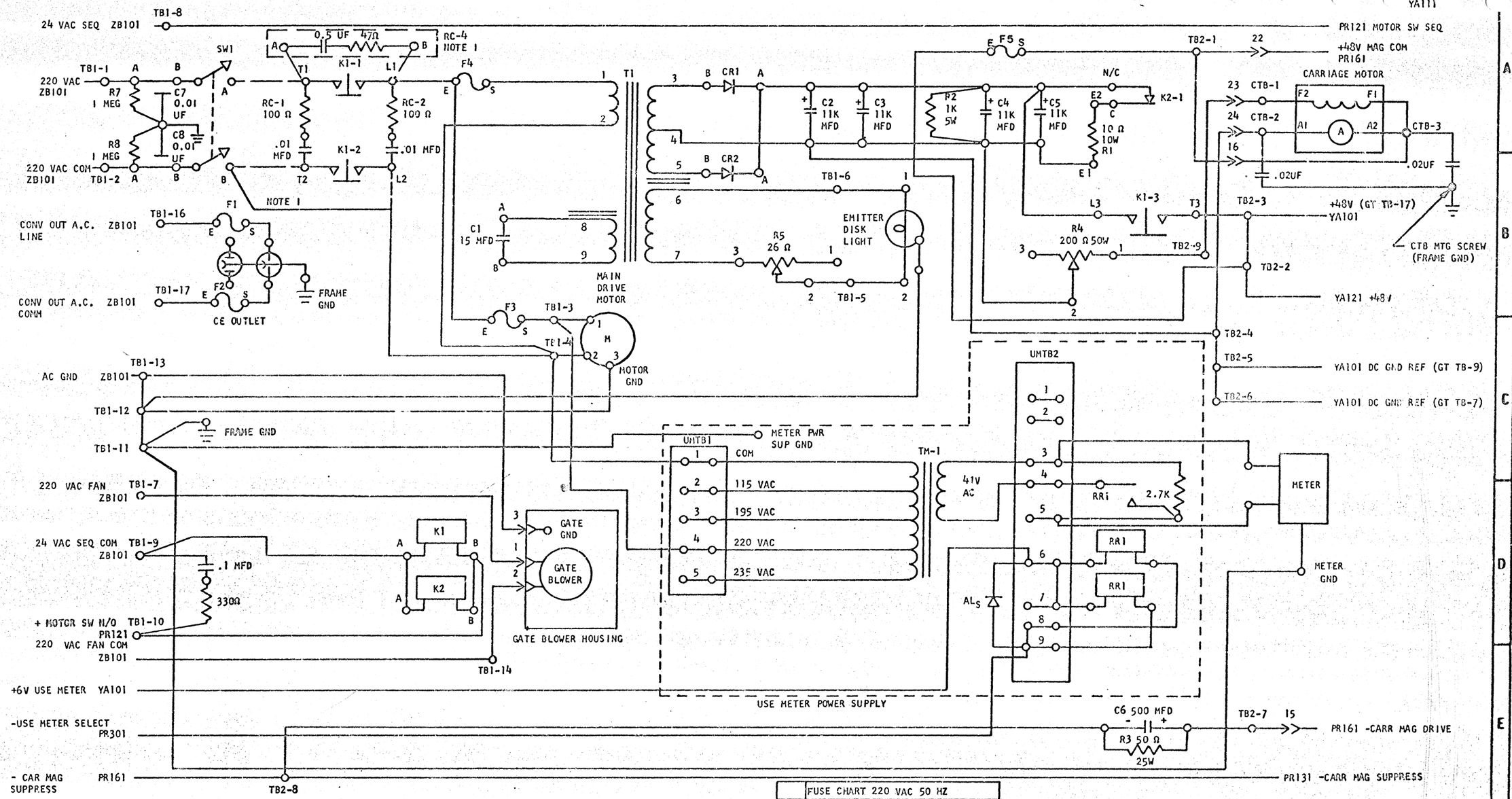

NOTE 1

LATER PRODUCTION MACHINES OR MACHINES WITH FIELD B/M 5870205 WILL HAVE RC-4 (IN PLACE OF RC-1 AND RC-2) AND C7, C8 NETWORK INSTALLED. WHEN RC-4 IS INSTALLED, K1-2 POINT IS NOT USED AND WIRING IS FROM SW1-B N/O TO TB1-4.

FUSE CHART 220 VAC 50 HZ		
FUSE	DESC	P/N
F1	3.2A LL	107664
F2	3.2A LL	107664
F3	3.2A LL	107664
F4	1.6A LL	228391
F5	2.0A LL	92734

DATE	EC NUMBER	DATE	SC NUMBER	POWER SUPPLY & DIST. 50 HZ			
SEP 65	415482	18JUL67	131254C				
DEC 65	415768	24JUL67	131258	DATE		P/N	2201329
SEP 66	419621	14NOV67	131273			TYPE	
DEC 66	419634			IBM		YA111	
23MAR67	131254						

YA111

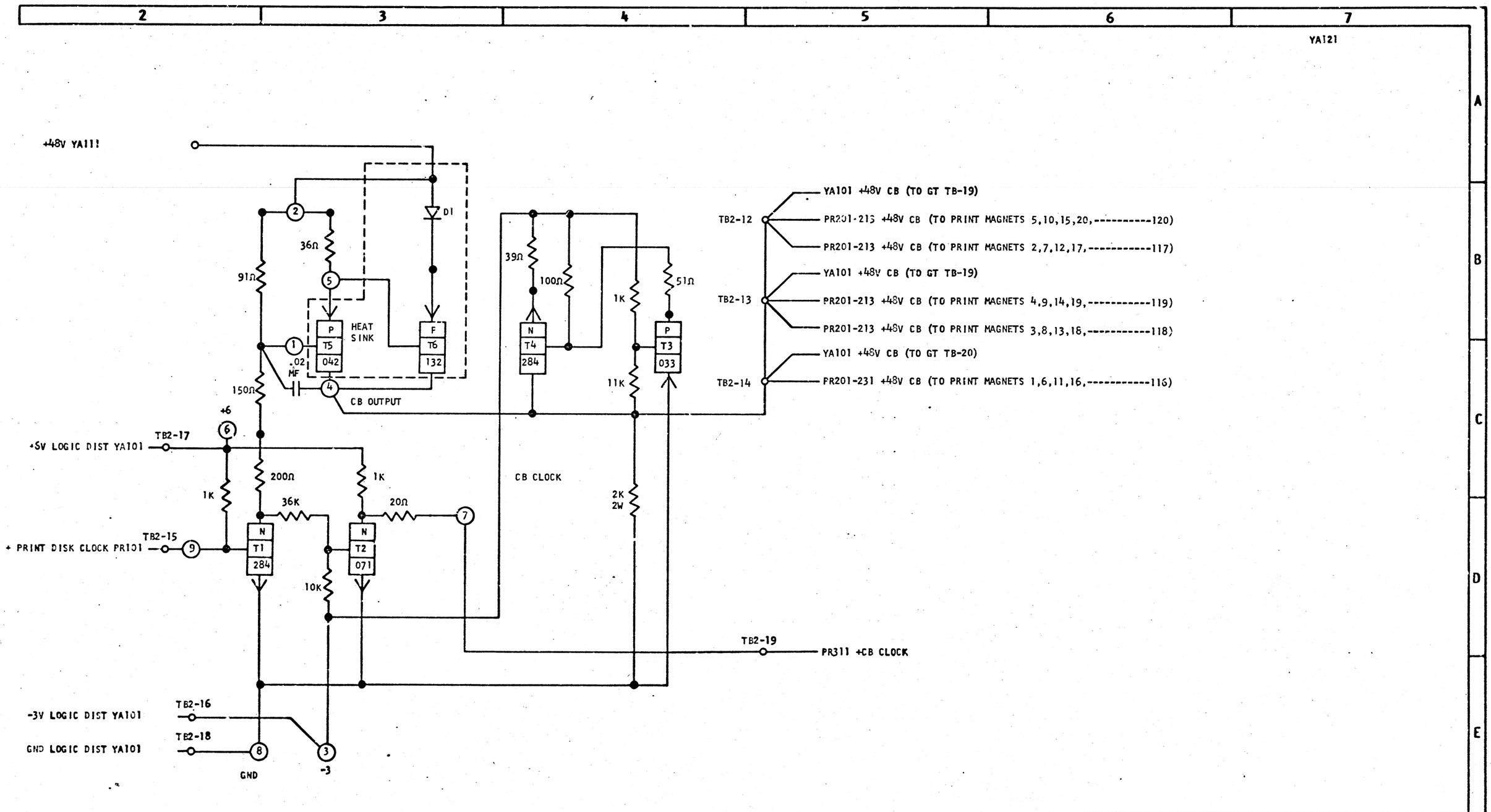

DATE	EC NUMBER	DATE	EC NUMBER	+48V PRINT MAGNET CB			
5-5-65	415400-C						
NOV 65	415492			DATE	5-5-65	P/N	2201332
						TYPE	1132
				IBM		YA121	

YA121

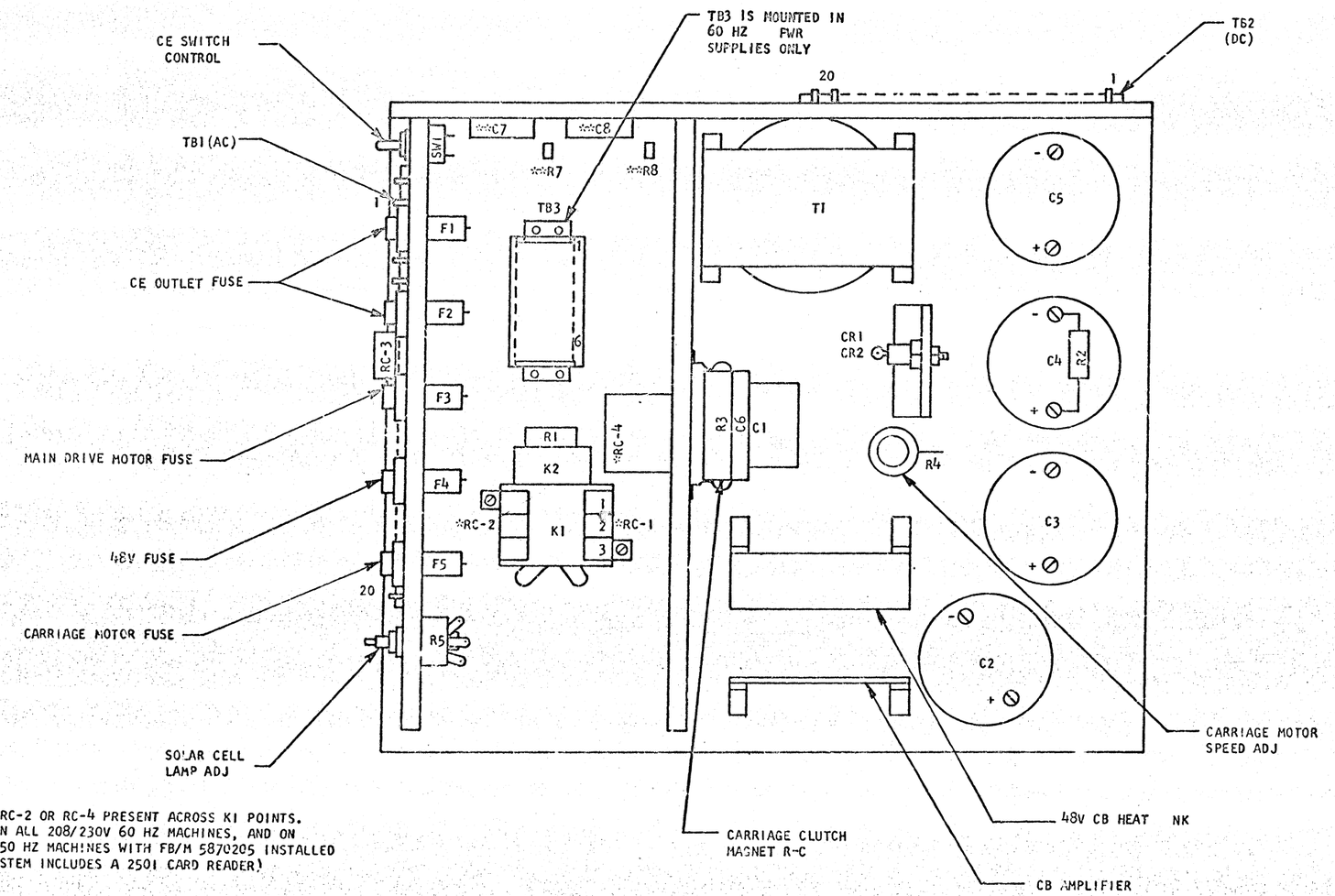

* MACHINES WILL HAVE EITHER RC-1 AND RC-2 OR RC-4 PRESENT ACROSS K1 POINTS.
** C7, R7 AND C8, R8 WILL BE PRESENT ON ALL 208/230V 60 HZ MACHINES, AND ON LATER PRODUCTION 50 HZ MACHINES OR 50 HZ MACHINES WITH FB/M 5870205 INSTALLED (C7, C8 AND RC-4 ARE REQUIRED IF SYSTEM INCLUDES A 2501 CARD READER)

DATE	EC NUMBER	DATE	EC NUMBER	48V DC POWER SUPPLY			
5-5-65	415480C			50 & 60 HZ			
	415482			DATE		P/N	2201333
DEC.66	419634					TYPE	1132
23MAR67	131254			IBM		YA131	
19JUN67	131258						

YA131

YA131

21

8 120

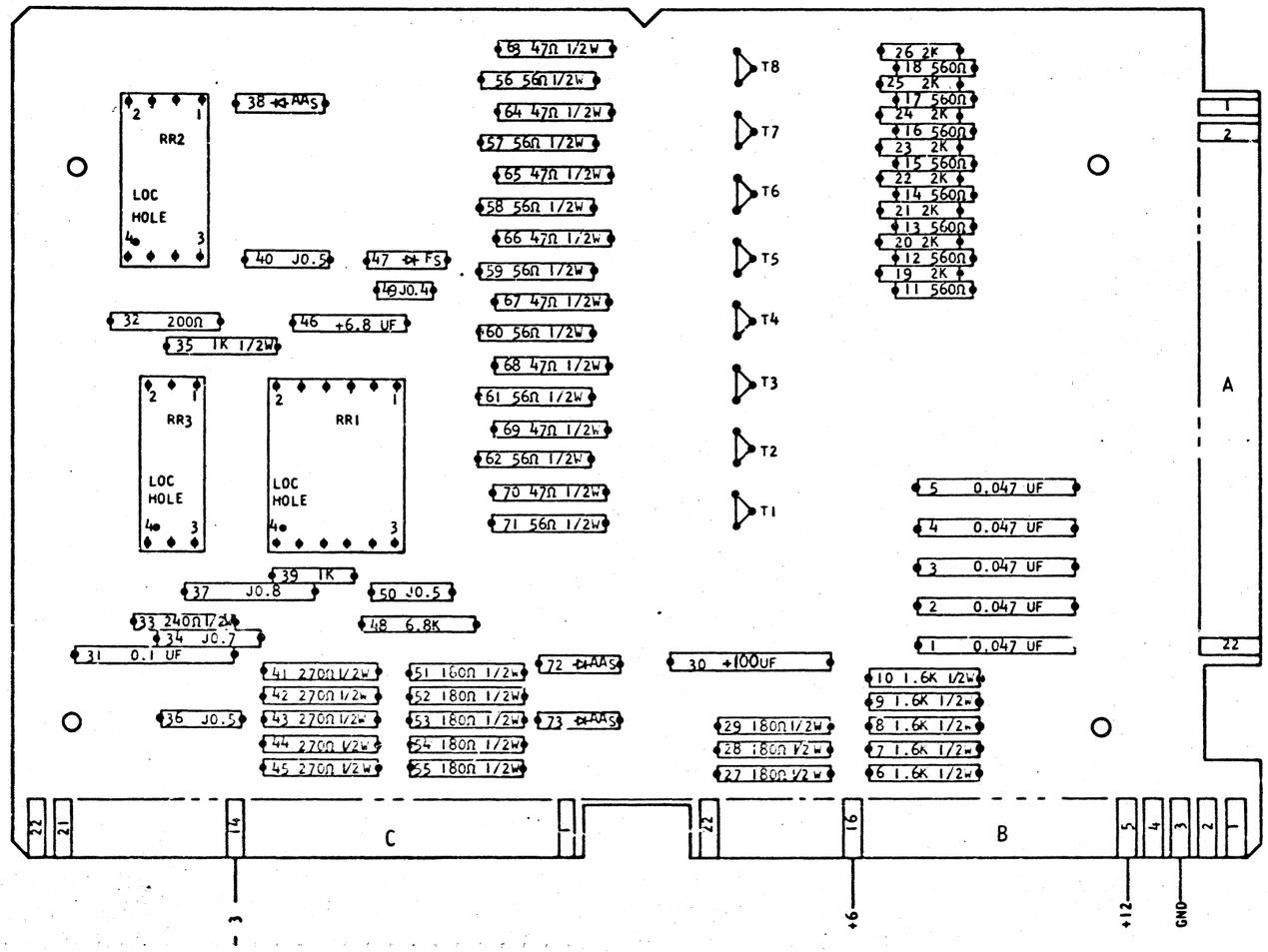

PARTS LIST		
PART NO.	DESCRIPTION	QTY
216452	2K	8
317003	47Ω, 1/2W	8
132400	56Ω, 1/2W	8
317018	1.6K, 1/2W	5
323918	180Ω, 1/2W	8
213693	1K, 1/2W	1
356740	270Ω, 1/2W	5
333202	240Ω, 1/2W	1
216445	1K	1
492615	200Ω	1
364889	.047UF	5
49.320	.1UF	1
124587	6.8UF	1
766073	REED RELAY	1
766041	REED RELAY	1
766059	REED RELAY	1
5261393	RECTIFIER	8
503591	FS	1
491008	AAS	3
222098	100UF	1
483316	CONTACT	26
216464	6.8K	1
216440	560Ω	8

NOTES

XI ALL RESISTORS 1/4,±5% UNLESS OTHERWISE NOTED

XII DIRECTION OF SLOTS IN (483316) CONTACTS FOR REED RELAYS AS SHOWN

XIII "J" IN BLOCK DENOTES BARE WIRE JUMPER 491296

SHEET 1 OF 2

DATE	EC NUMBER	DATE	EC NUMBER	SCR READ BRUSH LATCH CARD			
14SEP67	131261			AND JONES PLUG LAYOUT			
				DATE	JUL67	P/N	2532466
						TYPE	1132
				IBM		YA141	

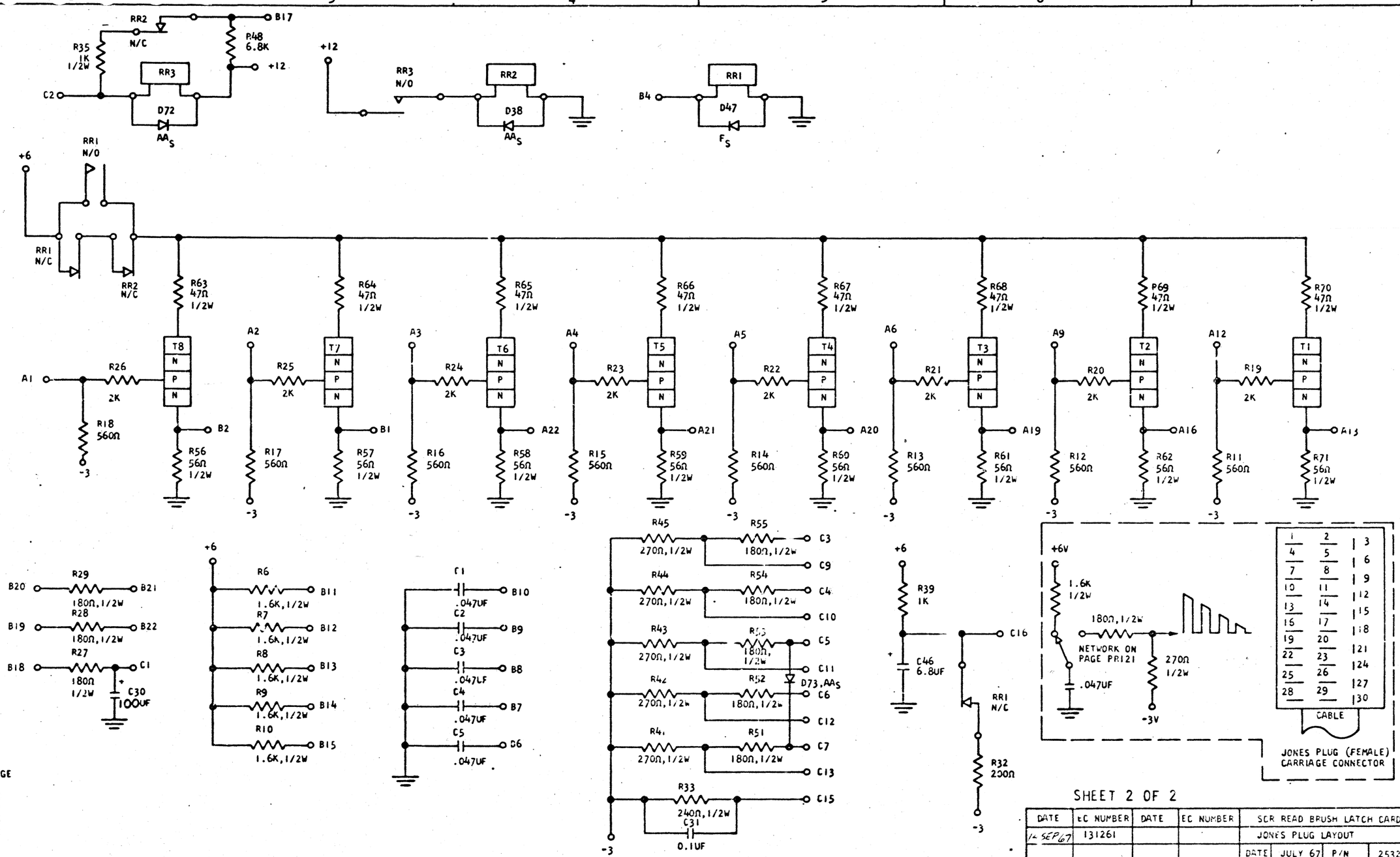

PIN	VOLTAGE
B3	GND
B5	+12
B16	+6
C14	-3

SHEET 2 OF 2

DATE	EC NUMBER	DATE	EC NUMBER	SCR READ BRUSH LATCH CARD AND			
14 SEP 67	131261			JONES PLUG LAYOUT			
				DATE	JULY 67	P/N	2532466
						TYPE	1132
				IBM		YA141	

NO	SIGNAL NAME	LOGIC PAGE	TEST POINT	LVL
	CARRIAGE MAGNET SELECT			
	ANY OTHER CARRIAGE BRUSH			
	OTHER BRUSH SCR LATCH			
	CHANNEL 1 BRUSH			
	CHANNEL 1 SCR LATCH			
	CARRIAGE CB			
	INTERRUPT REQUEST			
	SPACE INT ALLOW			
	INT LVL 1			

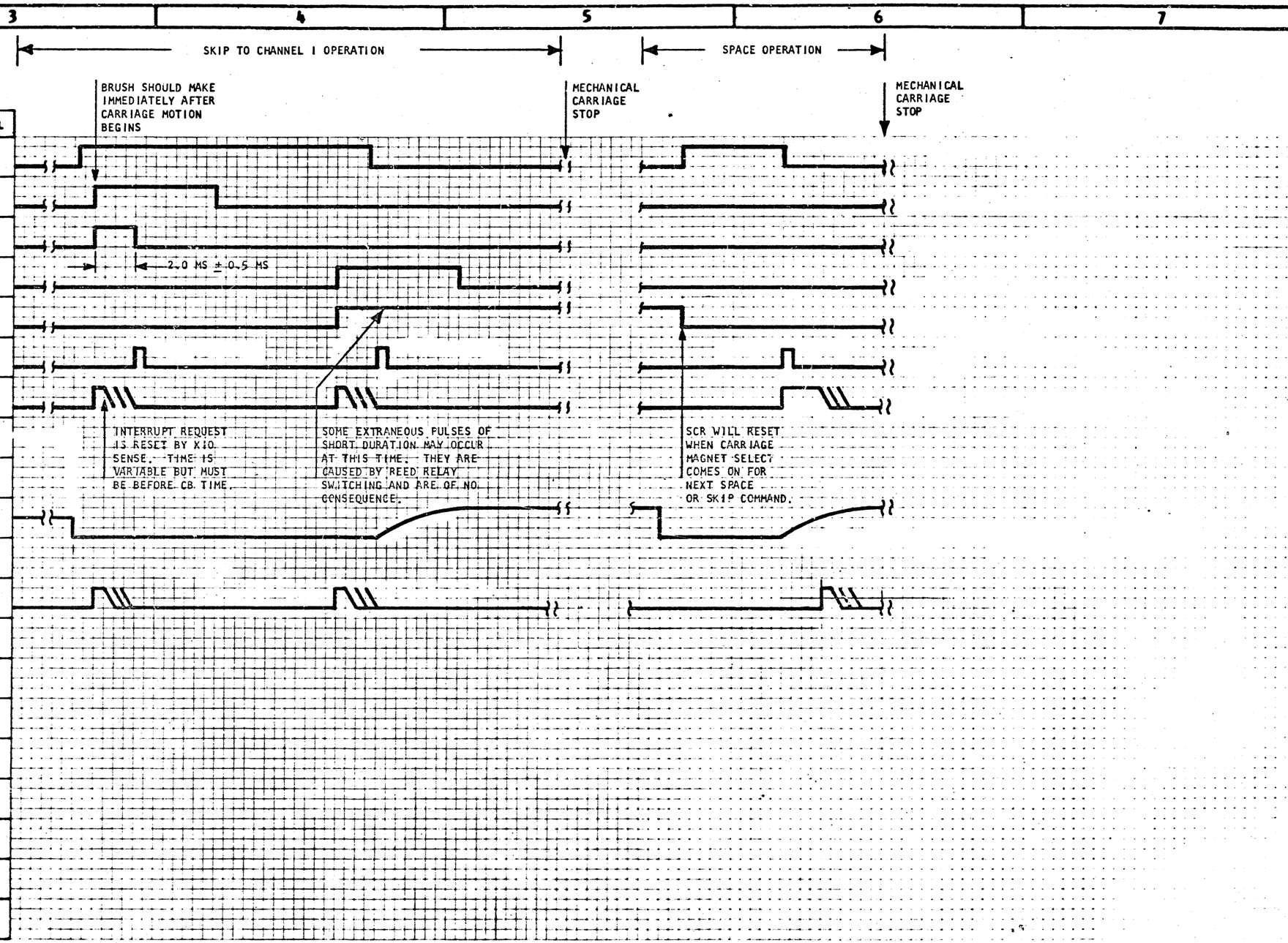

NOTES:

1. TYPICAL CARRIAGE BRUSH LATCH OPERATION. MAY BE APPLIED TO ANY BRUSH

DATE	EC NUMBER	DATE	EC NUMBER	CARRIAGE BRUSH LATCH			
SEP 66	419621			TIMING CHART			
NOV 66	419621B			DATE	JUL 66	P/N	2231323
						TYPE	
							YA142

YA151

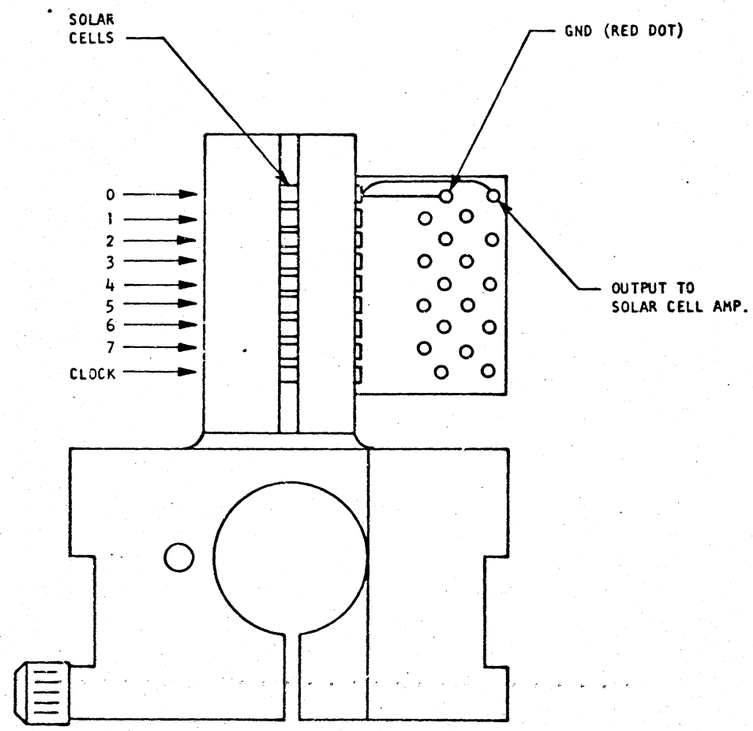

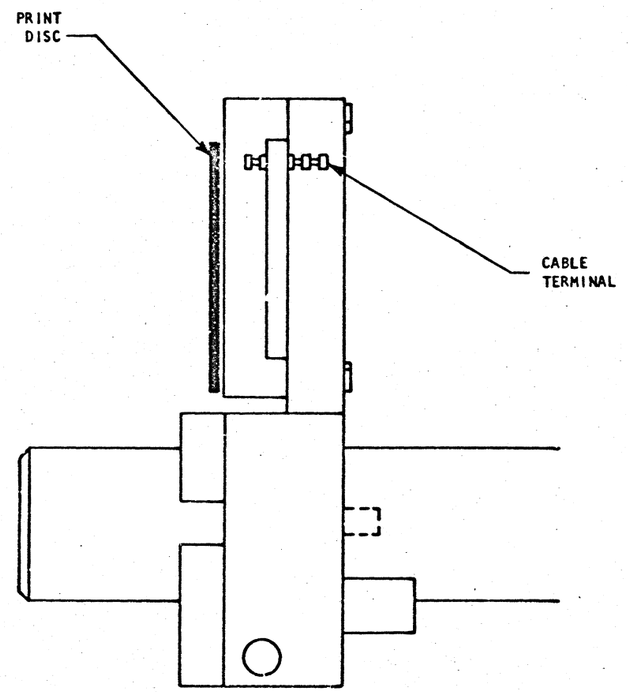

DATE	EC NUMBER	DATE	EC NUMBER	SOLAR CELL PICTORIAL			
5-5-65	415480C						
				DATE		P/N	2201335
						TYPE	1132
				IBM		YA151	

YA151

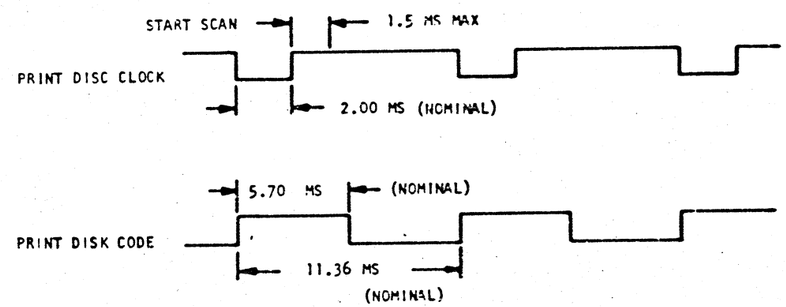

DISC SPEED - 108 RPM

DATE	EC NUMBER	DATE	EC NUMBER
5-5-65	415480C		

TIMING CHART - PRINT DISC

DATE	9-3-64	P N	2201336
		TYPE	1132

IBM YA161