IBM Maintenance Information

MI	MI	MI	MI	MI	MI	MI	MI	MI	MI	MI
MAPs	MAPs	MAPs	MAPs	MAPs	MAPs	MAPs	MAPs	MAPs	MAPs	MAPs
START EXIT 00–02	04–0E 2X–4X	80–84	88 89	AX	AX	CX DX EX F1–F5	F7 00–69	F7 6A–85	F7 86–FF	F8 FC FD FE INDEX
VOL 01	VOL 02	VOL 03	VOL 04	VOL 05	VOL 06	VOL 07	VOL 08	VOL 09	VOL 10	VOL 11

MI	MI	MI	MI	MI	MI
STM	STM FEAT	STM FEAT	POWER	GSI	
LOC REM ADJ DIAGN 53 FD CONFIG	CA 5424	LA OP GUIDE PDG DIAGN CONFIG	INTROD. PRINCIP. DETAILS REP INFO REF INFO	INTRO MAINT DIAGN TOOLS FRIEND	INSTALL. MANUAL PARTS CAT. OP GUIDE PACK. INSTR.
VOL 13	VOL 14	VOL 15	VOL 16	VOL 17	VOL 18

IBM 4331 Processor Supplement to MAPs

EC 366493
26 Oct 81

P/N 4687035

0 100 F

STM

Preface

This manual contains supplementary information to the MAPs, and must not be used as a stand-alone maintenance document. The PT-CE should use this manual only under guidance of the MAPs or of FSC-personnel.

The manual contains the following major topics:

- Index
- Section 1: Locations
- Section 2: Removals and Replacements
- Section 3: Adjustments
- Section 4: Diagnostic Run Procedures
- Section 5: 53 FD Console Disk File Maintenance Information
- Section 6: Configure Section

Volume Table of Contents

Volume: 13
Title: MI Supplement to MAPS
Machine Type: 4331-2
Power Design Level: 4/5
B/M Number: 5683363

Safety

Personal Safety

Personal safety cannot be over-emphasized. To ensure your safety and that of co-workers, always observe the safety precautions given during your safety training and adhere to the following:

General Safety Practices

Observe the general safety practices and the procedure for performing artificial respiration that are outlined in CE Safety Practices card, Order No. S229-1264 (shown here).

Machine Warning Labels

Pay attention to the warning labels placed in hazardous areas of the machines.

Danger

Before switching on power, ensure that no person is exposed to risk and that all equipment covers for hazardous areas are closed.

SAFETY NOTICES

CE SAFETY PRACTICES

All Customer Engineers are expected to take every safety precaution possible and observe the following safety practices while maintaining IBM equipment.

1. You should not work alone under hazardous conditions or around equipment with dangerous voltage. Always advise your manager if you MUST work alone.
2. Remove all power AC and DC when removing or assembling major components, working in immediate area of power supplies, performing mechanical inspection of power supplies and installing changes in machine circuitry.
3. Wall box power switch when turned off should be locked or tagged in off position. "Do not Operate" tags, form 229-1266, affixed when applicable. Pull power supply cord whenever possible.
4. When it is absolutely necessary to work on equipment having exposed operating mechanical parts or exposed live electrical circuitry anywhere in the machine, the following precautions must be followed.
   a. Another person familiar with power off controls must be in immediate vicinity.
   b. Rings, wrist watches, chains, bracelets, metal cuff links, shall not be worn.
   c. Only insulated pliers and screwdrivers shall be used.
   d. Keep one hand in pocket.
   e. When using test instruments be certain controls are set correctly and proper capacity, insulated probes are used.
   f. Avoid contacting ground potential (metal floor strips, machine frames, etc.—use suitable rubber mats purchased locally if necessary).
5. Safety Glasses must be worn when:
   a. Using a hammer to drive pins, riveting, staking, etc.
   b. Power hand drilling, reaming, grinding, etc.
   c. Using spring hooks, attaching springs.
   d. Soldering, wire cutting, removing steel bands.
   e. Parts cleaning, using solvents, sprays, cleaners, chemicals, etc.
   f. All other conditions that may be hazardous to your eyes. REMEMBER, THEY ARE YOUR EYES.
6. Special safety instructions such as handling Cathode Ray Tubes and extreme high voltages, must be followed as outlined in CEM's and Safety Section of the Maintenance Manuals.
7. Do not use solvents, chemicals, greases or oils that have not been approved by IBM.
8. Avoid using tools or test equipment that have not been approved by IBM.
9. Replace worn or broken tools and test equipment.
10. The maximum load to be lifted is that which in the opinion of you and management does not jeopardize your own health or well-being or that of other employees.
11. All safety devices such as guards, shields, signs, ground wires, etc., shall be restored after maintenance.
12. Each Customer Engineer is responsible to be certain that no action on his part renders product unsafe or exposes hazards to customer personnel.
13. Place removed machine covers in a safe out-of-the-way place where no one can trip over them.
14. All machine covers must be in place before machine is returned to customer.
15. Always place CE tool kit away from walk areas where no one can trip over it (i.e., under desk or table).
16. Avoid touching mechanical moving parts (i.e., when lubricating, checking for play, etc.).
17. When using stroboscope — do not touch ANYTHING — it may be moving.
18. Avoid wearing loose clothing that may be caught in machinery. Shirt sleeves must be left buttoned or rolled above the elbow.
19. Ties must be tucked in shirt or have a tie clasp (preferably non-conductive) approximately 3 inches from end. Tie chains are not recommended.
20. Before starting equipment, make certain fellow CE's and customer personnal are not in a hazardous position.
21. Maintain good housekeeping in area of machines while performing and after completing maintenance.

ARTIFICIAL RESPIRATION

General Considerations

1. Start Immediately, Seconds Count
   Do not move victim unless absolutely necessary to remove from danger. Do not wait or look for help or stop to loosen clothing, warm the victim or apply stimulants.
2. Check Mouth for Obstructions
   Remove foreign objects — Pull tongue forward.
3. Loosen Clothing — Keep Warm
   Take care of these items after victim is breathing by himself or when help is available.
4. Remain in Position
   After victim revives, be ready to resume respiration if necessary.
5. Call a Doctor
   Have someone summon medical aid.
6. Don't Give Up
   Continue without interruption until victim is breathing without help or is certainly dead.

Rescue Breathing for Adults Victim on His Back Immediately

1. Clear throat of water, food, or foreign matter.
2. Tilt head back to open air passage.
3. Lift jaw up to keep tongue out of air passage.
4. Pinch nostrils to prevent air leakage when you blow.
5. Blow until you see chest rise.
6. Remove your lips and allow lungs to empty.
7. Listen for snoring and gurgling, signs of throat obstruction.
8. Repeat mouth to mouth breathings 10-20 times a minute. Continue rescue breathing until he breathes for himself.

Thumb and finger positions

Final mouth to mouth position

Reprint Courtesy Mine Safety Appliances Co.

Copyright Note

IBM has prepared this maintenance manual for the use of IBM customer engineers in order to maintain the specific machines indicated. IBM makes no representations that it is suitable for any other purpose.

Information contained in this manual is subject to change. Any such change will be reported in subsequent revisions.

Requests for copies of IBM publications should be made to your IBM representative or to the IBM branch office servicing your locality.

A form for reader's comments are provided at the back of this publication. If the comment form has been removed, comments may be addressed to (IBM Germany, Publications, Department 3179, 7030 Boeblingen, Schoenaicher Str. 220). Comments become the property of IBM. IBM may use or distribute any information you supply in any way it believes appropriate without incurring any obligation whatever. You may, of course, continue to use the information you supply.

Index

A

B

C

D

E

F

G

H

Index (continued)

I

L

M

N

O

P

R

S

T

U

W

2

3

5

8

This page has been
intentionally left blank

Supplement to MAPs, Section 1: LOCATIONS

Table of Contents

Operators Console and CE-Panel

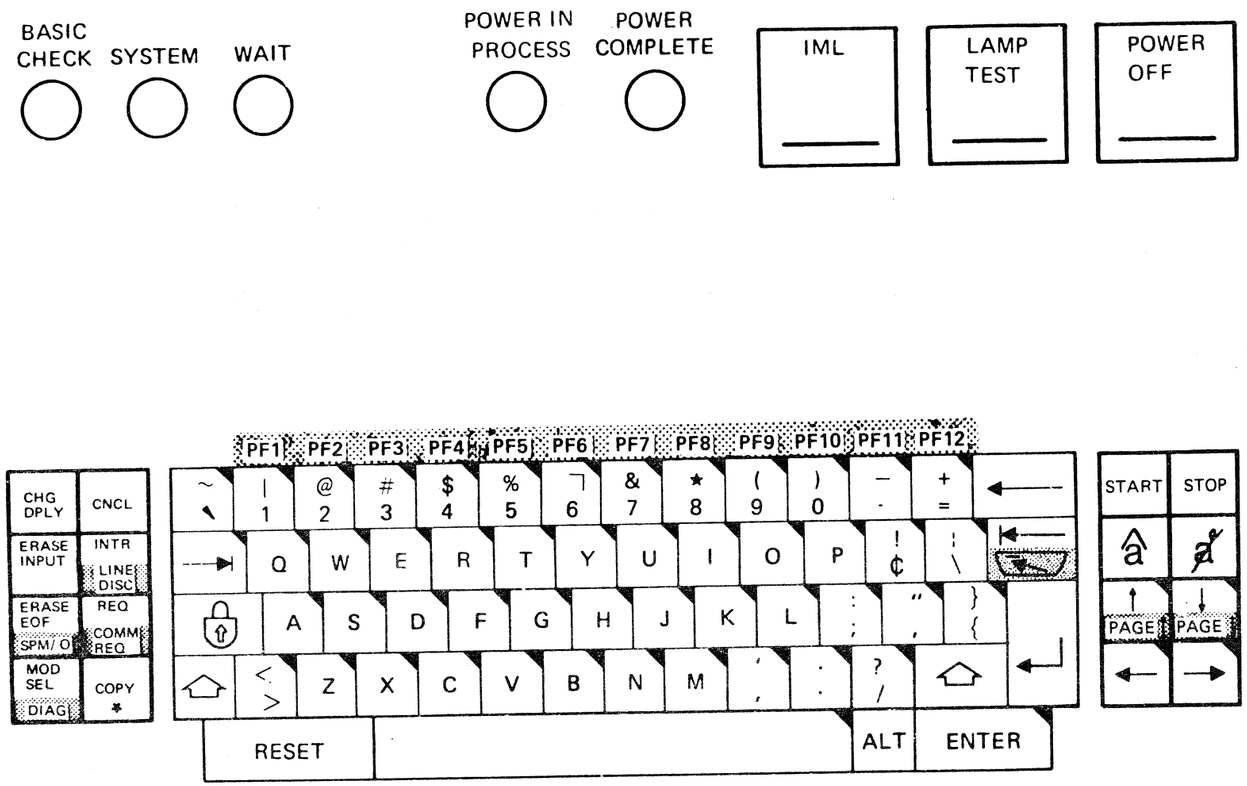

DETAIL OF CE-PANEL

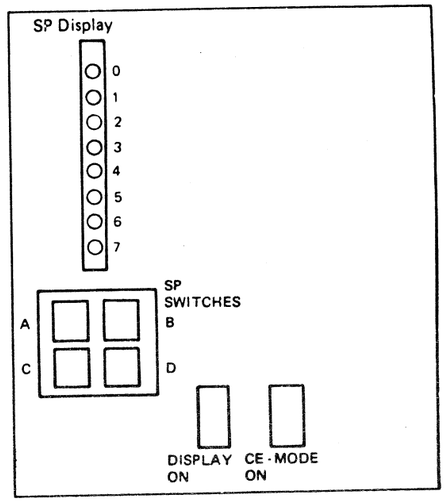

Note:
For more information see 'Section 4'.

Function is only active when ALT key is pressed at the same time

* COPY key. When a console printer is connected save a printout whenver you have an important log/test/tool information on screen, this might be useful in case of support!

Log Printout: The 4300 Friend has the command 'Print Log' to print the Log/Screen picture on the Line Printer.
(See: 4300 Friend page 0175)

Physical Locations

This page shows the maximum configuration for the processor 4331, Model 2.
The maximum configuration for the processor 4331-11 does not include all units shown.

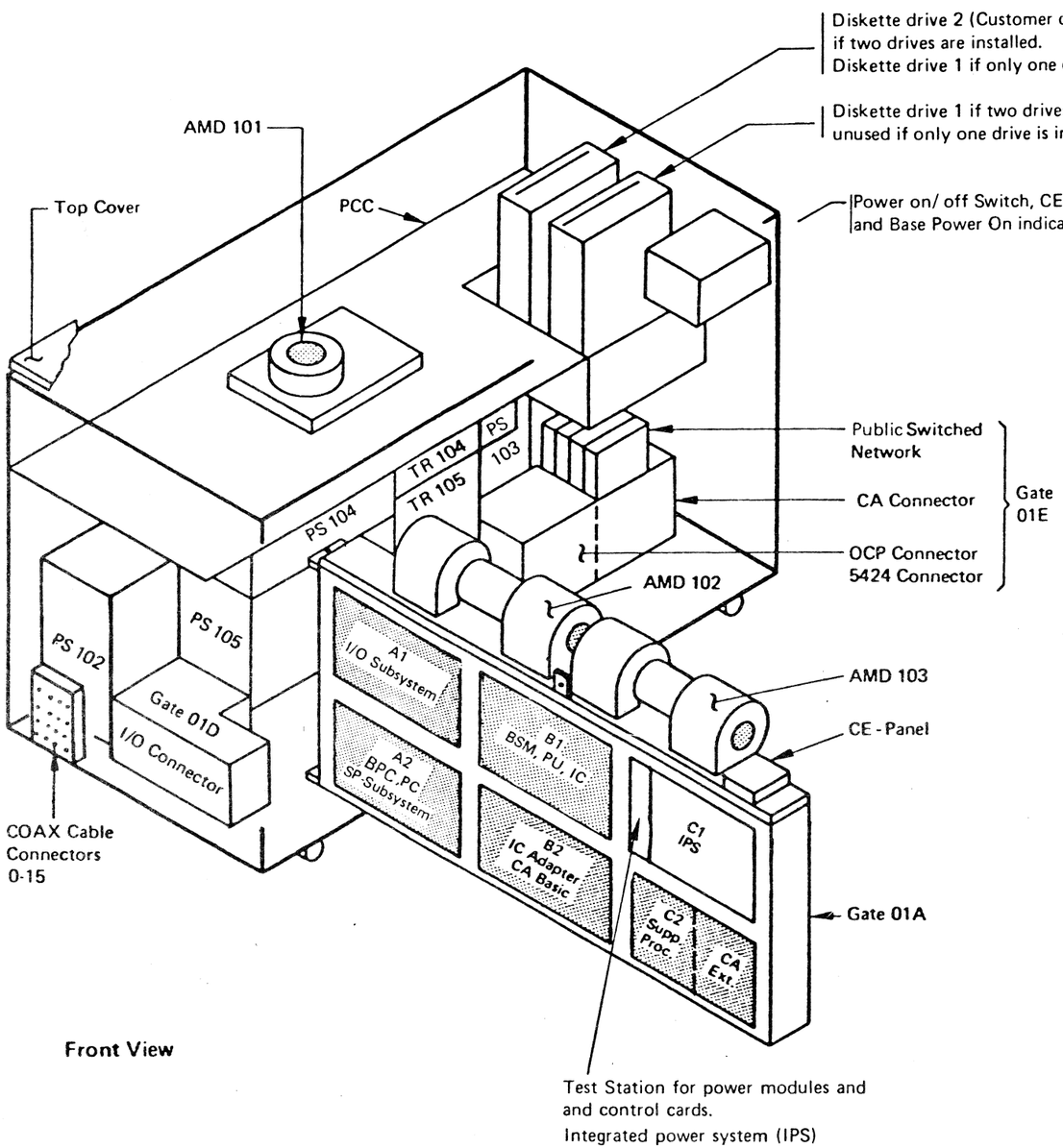

Front View

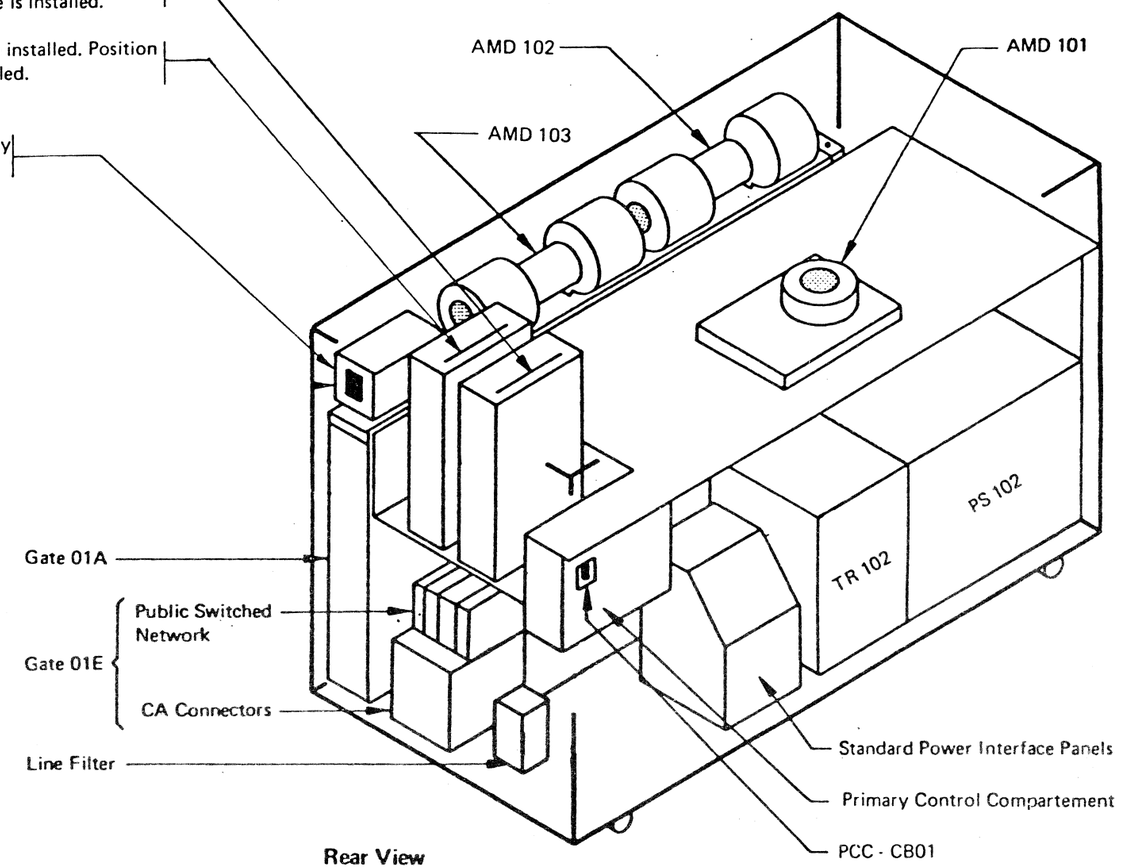

Rear View

Note: Pictures show maximum configuration.
Not all units shown may be installed.

ADB1020

STM

EC 366269 03 Aug 79	EC 366284 27 Mar 80	EC 366516 05 Feb 82	P/N 5683394 Page 1 of 4	1020 F

Physical Locations (continued)

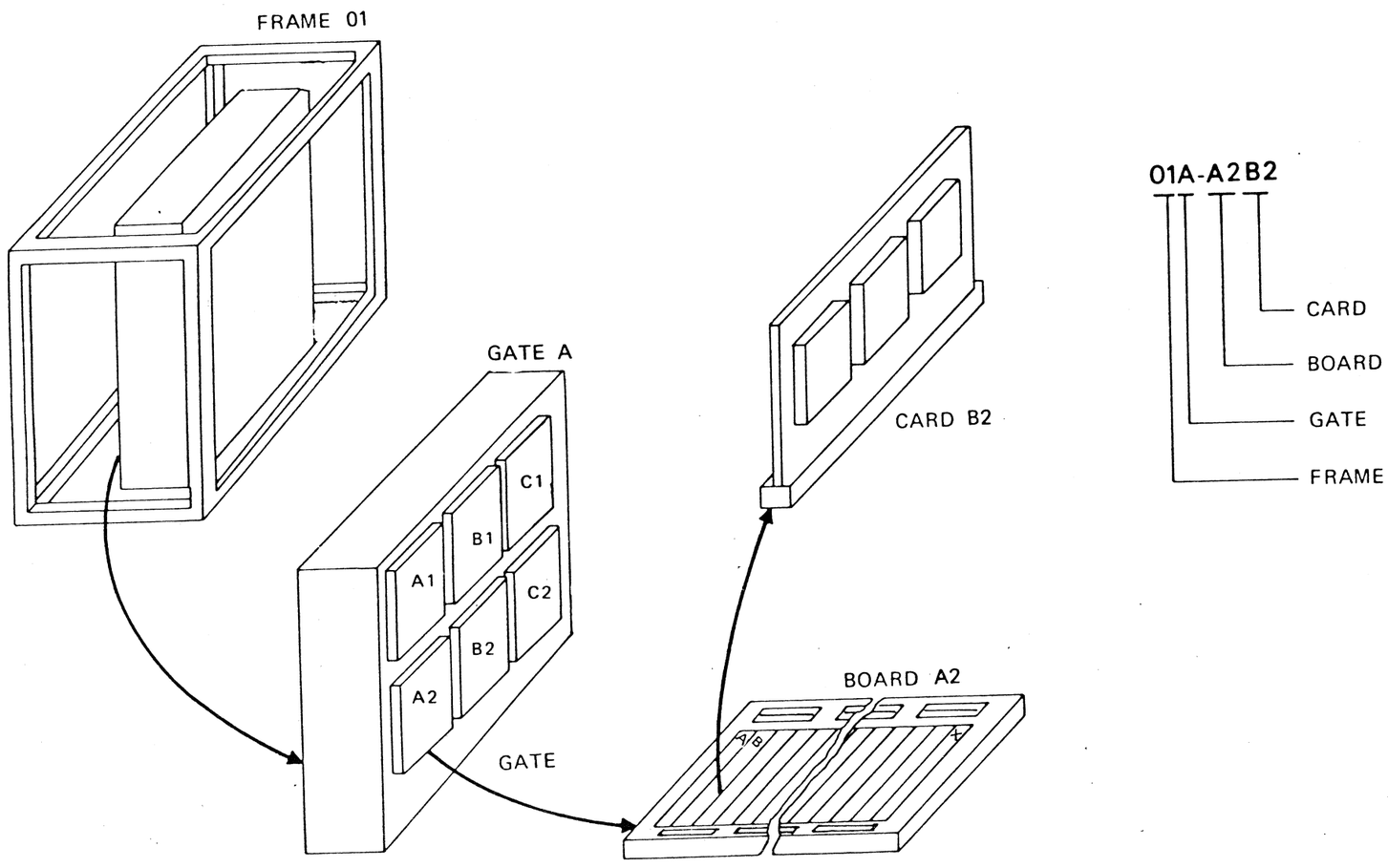

Pins and Top Connectors Numbering of 22 Position Board *

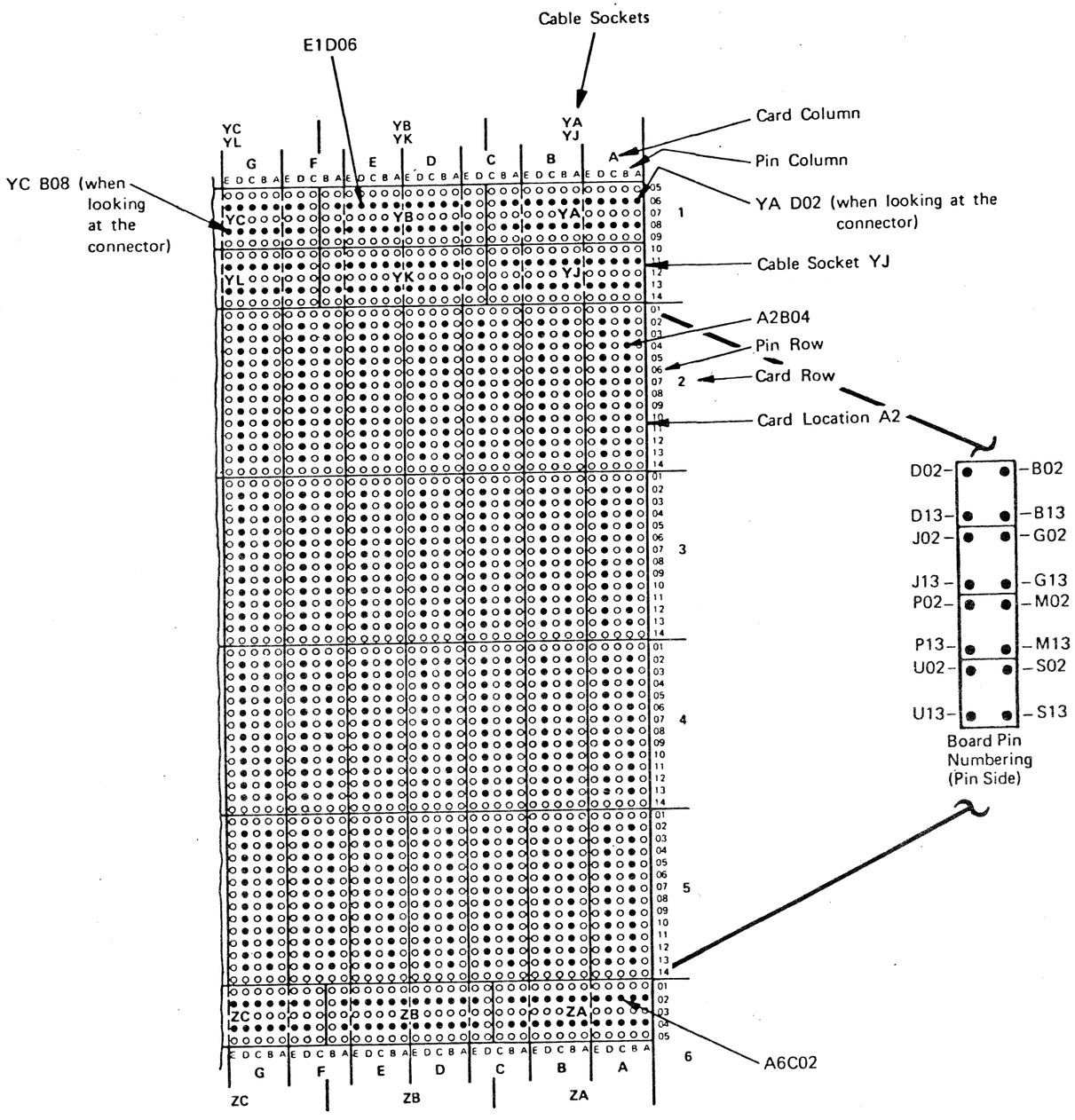

* From Pin Side

Card Top Connector

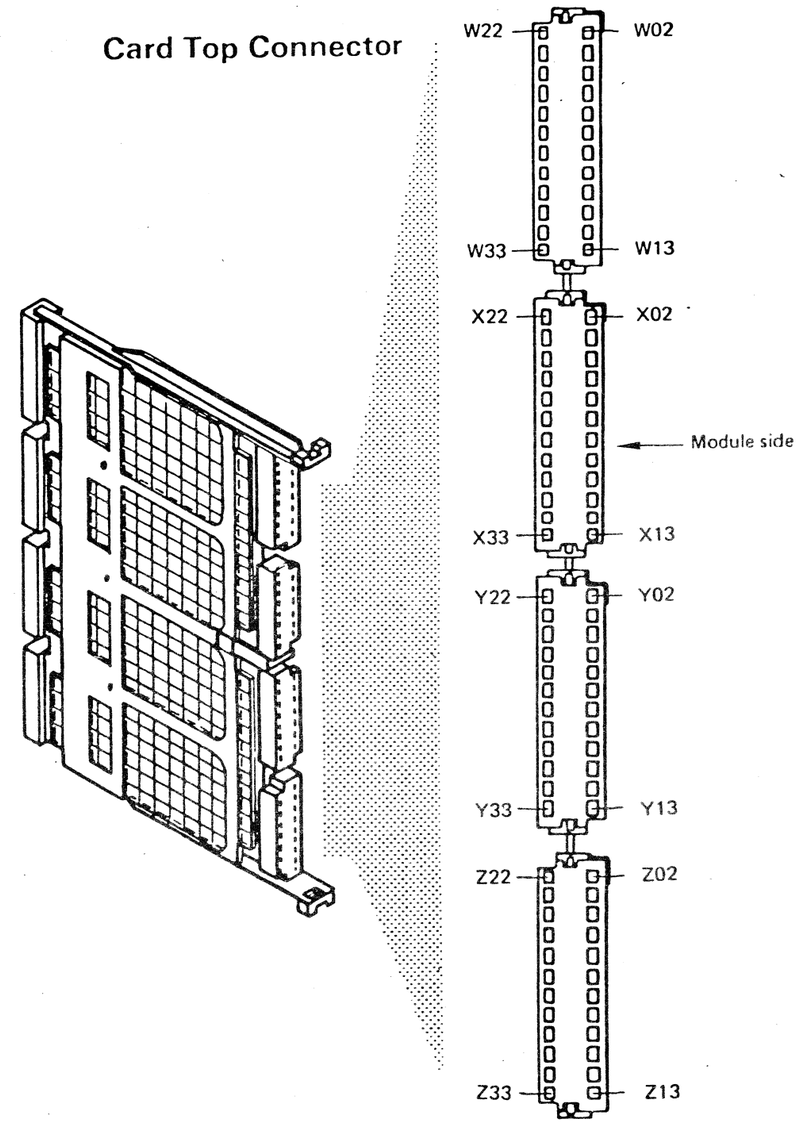

ADB1040

STM

EC 366269 03 Aug 79	EC 366284 27 Mar 80	EC 366516 05 Feb 82	P/N 5683394 Page 3 of 4	1040 F

Layout of the 22 Position Board *

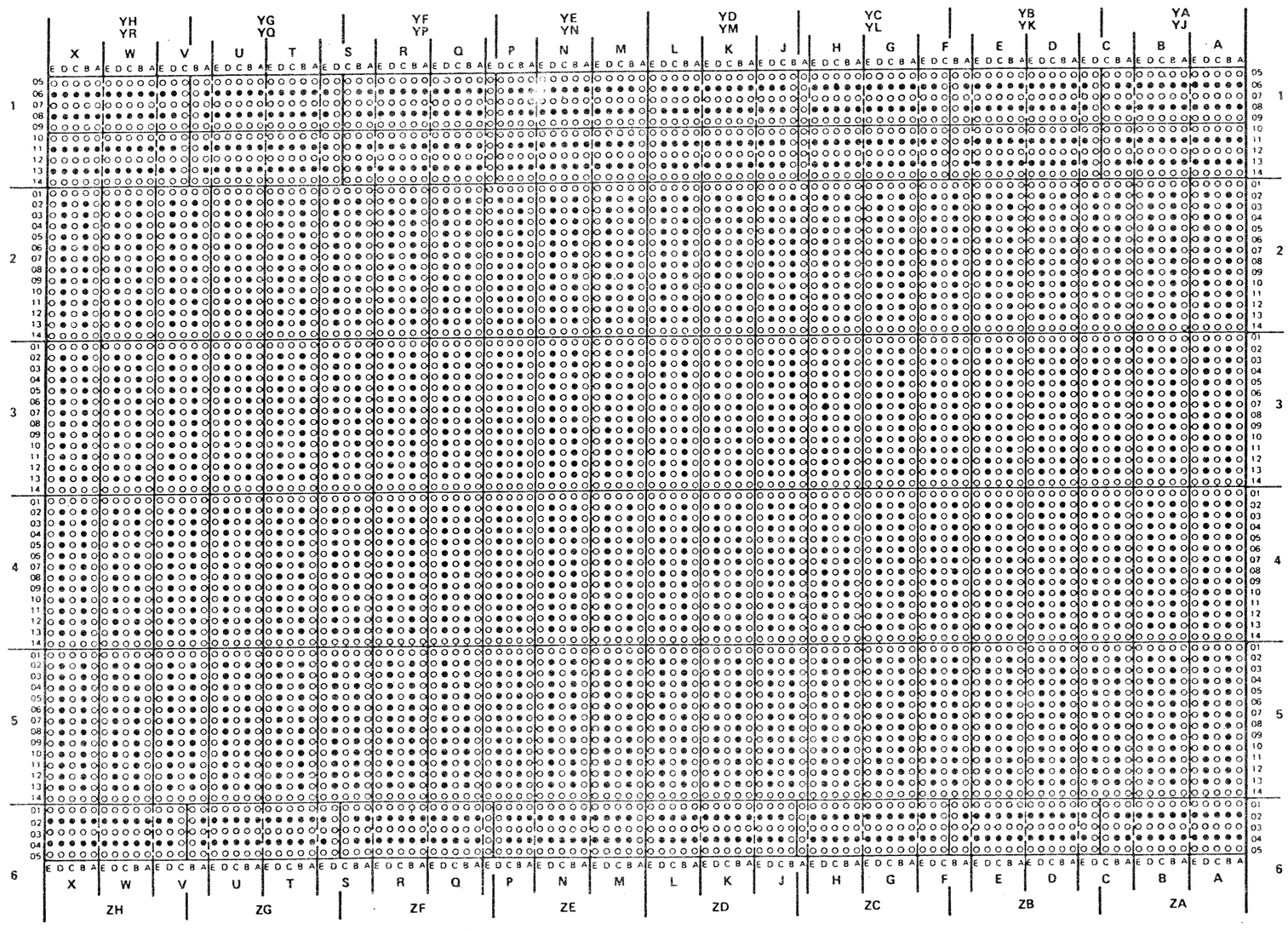

General Pin Assignments:
D08 – Ground
D03 – +5V

* From Pin Side

Use of Cards

On the following pages all cards belonging to a unit are sequentially numbered, for example the cards of the processing unit are named PU card 1 through 7. The following list gives where possible the meaning (use) of the card.

Board	Code Card	Card Number	Use of Card	
A1	SF5	IOC card 5	Control store ext.	Note 1
	SF5	IOC card 6	Control store ext.	
B1	QA5/QS2	PU card 1	Control store	Note 3
	QA5	PU card 2	Control store	
	QC5	PU card 3	Control card	
	QC3	PU card 4	ALU card	
	QC2	PU card 5	Storage interface	
	QC7	PU card 6	Cache store	
	QC9	PU card 7	Data mover	
	QD1	BSM card 1	Storage control	
		BSM card 2	Main store	
		BSM card 3	Main store	
		BSM card 4	Main store	
		BSM card 5	Main store	
		BSM card 6	Main store	Note 2
		BSM card 7	Main store	
		BSM card 8	Main store	
		BSM card 9	Main store	
B2	QG3	MPX card 1	SCA interface card	
	QG2	MPX card 2	SCA card	
	QG3	BMPX (X) card 1	SCA interface card	
	QG2	BMPX (X) card 2	SCA card	
	QF3	FTA (X) card 1	CTLI card	
	QF2	FTA (X) card 2	Control card	
	QF1	FTA (X) card 3	Data card	
	QG3	HSC card 1	HSC interface card	
	QG5	HSC card 2	HSC adapter card	
	QG4	HSC card 3	HSC-IC bus link	
C2	SF5	SP card 5	Control store ext.)	Note 1
	SF5/SF9	SP card 6	Control store ext.)	

For card code and P/N refer to PA13 or plug chart in Volume 30.

Notes:

1. In case of IOSS Processor (A1 Board):
   If the SF5 cards are plugged a QH8 card must be plugged in F2.

   In case of MSSS Processor (C2 Board):
   If the SF5 cards are plugged a QH7 card must be plugged in G2.
   If a SF9 card is plugged it requires a QJ7 in G2.

2. 0,5 MB cards QD7 may be replaced by 0,5 MB card QD6, or groups of 0.5 MB cards may be replaced by 1.0 MB cards. Refer to the card plug list in Vol. 30 and table on page 6190 of this manual.

3. The PU control store may consist of two 64 KB cards (QA5) or one 128 KB card (QS2).

Card Locations

GATE 01A

Board A1

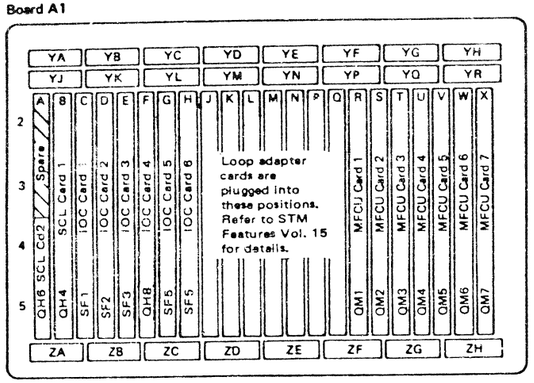

The Board A1 contains the I/O Controller. and Multifunction Card Unit Adapter or the Loop Adapter. Only one of both can be installed

Board B1

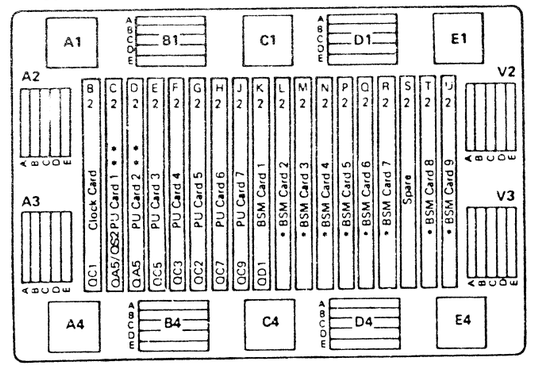

The Board B1 contains the Clock, Processing Unit, and Basic Storage Module.

- * Depends on configuration and of card type used, for example 0,5 or 1.0 MB cards. See plug list in Vol. 30.
- ** Depends upon type of control storage. If card QS2 is plugged, position D is empty.

Board C1

The Board C1 contains the Integrated Power System. For details refer to the manual 'Power MI' section 'Reference'.

Board A2

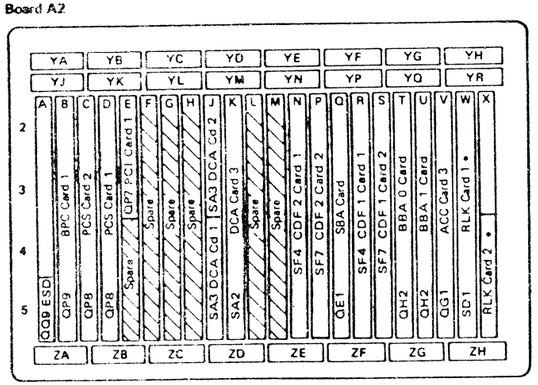

The Board A2 contains the Base Power Control, Power Control and Sense, Power Control Interface, Display Cluster Adapter, Console Disk File, Bus to Bus Adapter, Support Bus Adapter, Adapter Control card and Remote link.

*Cards are not plugged permanently
As RLK Card 2 a SD5, SD8 or SD3 Card can be plugged.

Board B2

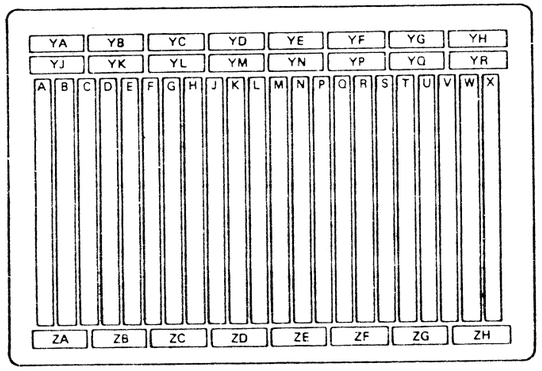

For Board B2 Layout see next page.

Board C2

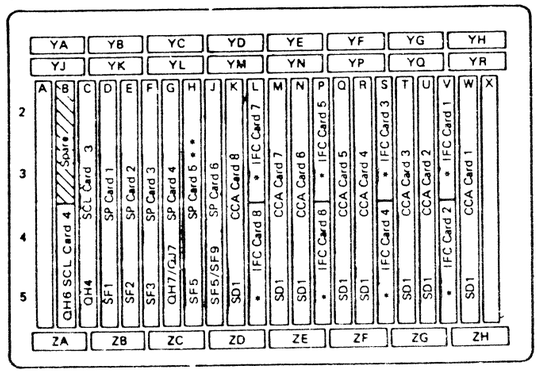

The Board C2 contains the Support Processor, adapter cards and interface cards for Communication Adapter lines.

- * The card type plugged depends on the line type installed, see the CA - Section in the STM features in volume 14.
- ** Depends upon type of storage. If cards QJ7/SF9 are plugged, position H is empty.

Note: Card = Cd

Card Locations (continued) Board B2

(See Caution Note)

Version 1

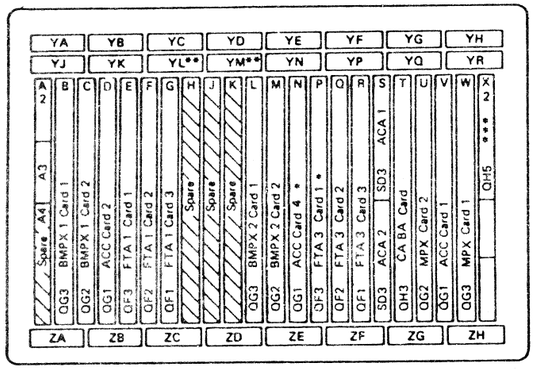

This Board B2 contains:
Two Block Multiplexer Channels File Tape Adapter 1, 3, Auto Call Adapter, Communication Adapter, Multiplexer Channel and Terminator.

Version 2

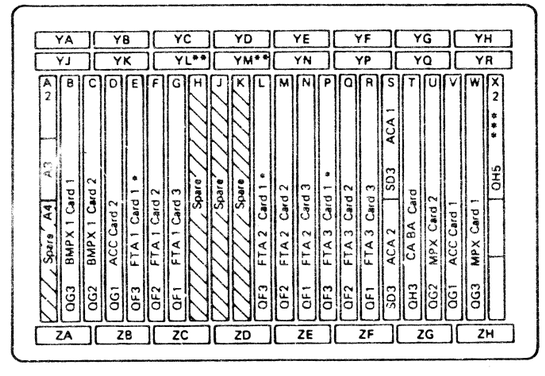

The Board B2 contains:
The Block Multiplexer Channel, File Tape Adapter 1, 2, 3, Auto Call Adapter, Communication Adapter, Multiplexer Channel, and Terminator.

Version 3

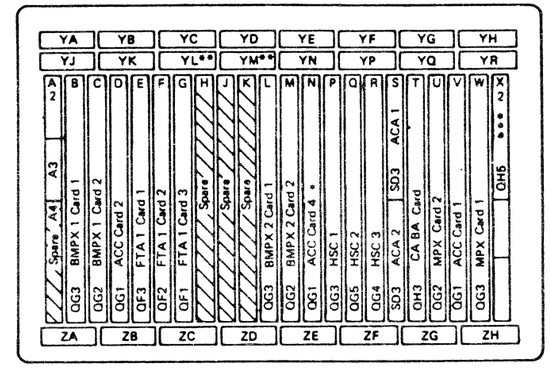

This Board B2 contains:
Two Block Multiplexer Channels, High Speed Channel, Auto Call Adapter, Communication Adapter, Multiplexer Channel and Terminator.

* If feature is not installed
Card QE 20 is plugged in this position

** Terminator cards (QH 9) for IC - Bus 1

*** Terminator card (QH 5) for IC - Bus 0

Warning
The card plug positions B2, E2, L2, P2, and W2 supply a special voltage on a signal pin.
Any other card than the specified one, plugged into these positions can be destroyed.

Cabling Layout for Gate 01A

Notes:

1. For P/Ns of cards refer to 'card plug list' in vol. 30.
2. W2 / X3 — These two plugs, labeled W2 and X3, are not interchangeable. For more detail ref. To Power manual sec. (REF)

End connector. These connectors are interchangeable and can be installed any way.

Support Bus — IC Bus — Processor Bus — Voltages — Sense Line — Interface

Top connector Cable — Board connector (Paddle - Card Cable) — Top connector Card to Card. These connectors are interchangeable

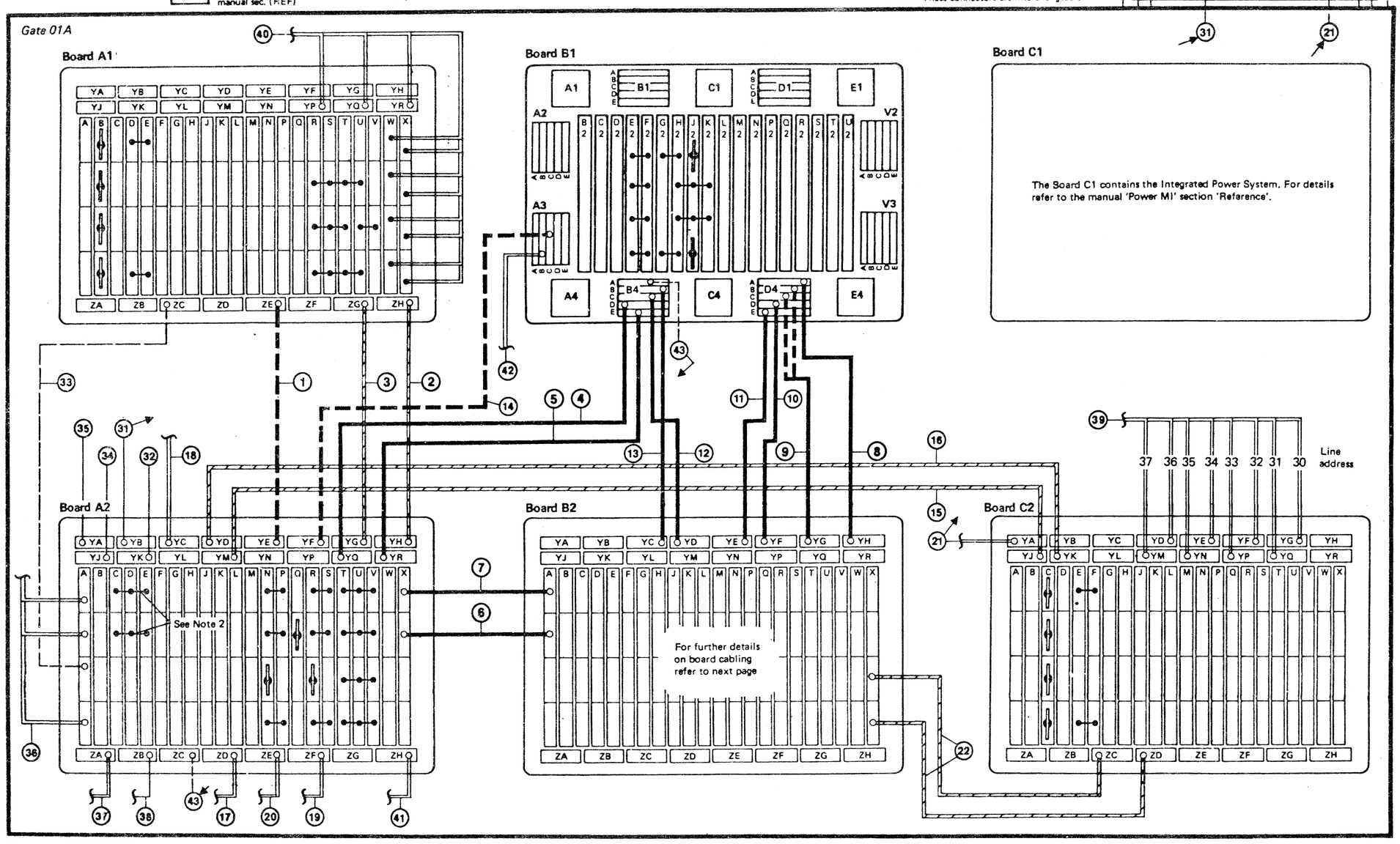

Cabling Layout for Gate 01A (continued)

Layout for Board B2-Version 1

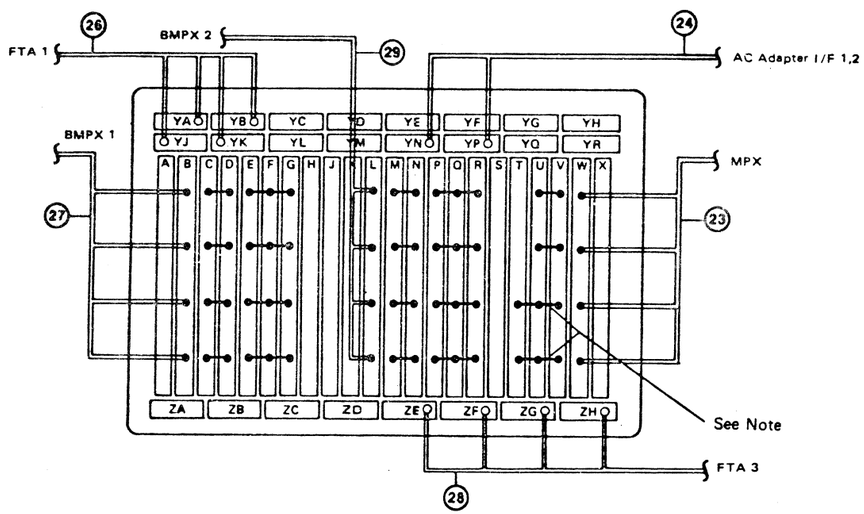

Layout for Board B2-Version 2

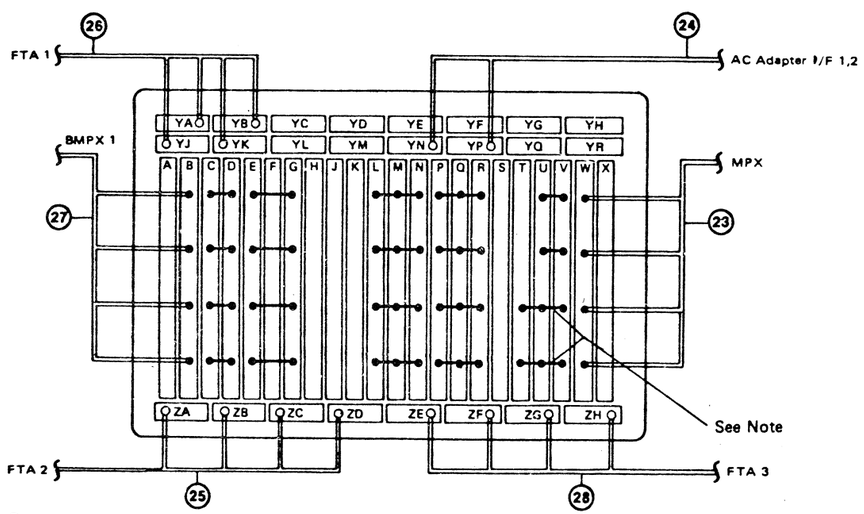

STM

Layout for Board B2-Version 3

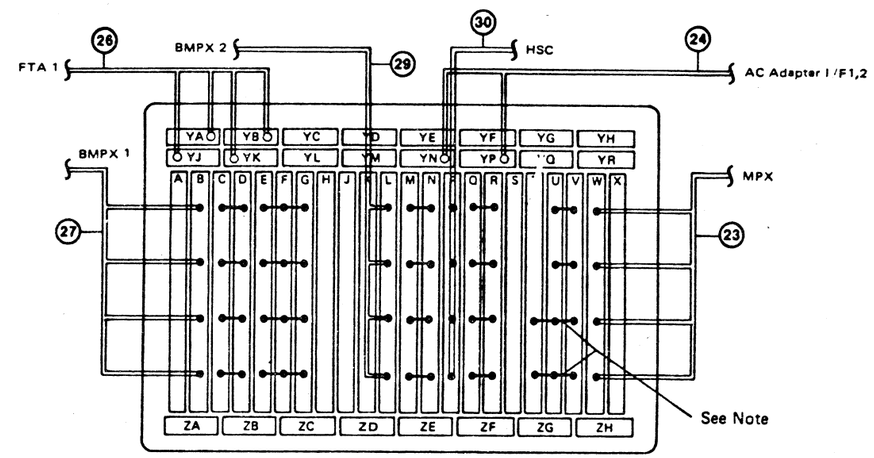

Note: 3-position crossover (T-U-V) if CA or CA with MPX installed.
2-postion crossover (U-V) if MPX without CA installed.

Cable Locations for Gate 01A

Sequence number	Use of Cable	Location	
		From Board	To
1	Support Bus to I/O	A2 - YE	Board A1 - ZE
2	Processor bus for I/O SS	A1 - ZH	Board A2 - YH
3	Processor bus for I/O SS	A1 - ZG	Board A2 - YG
4	IC Bus 1	A2 - YQ	Board B1 - B4D
5	IC Bus 1	A2 - YR	Board B1 - B4E
6	IC Bus 1	B2 - A3	Board A2 - X3
7	IC Bus 1	B2 - A2	Board A2 - X2
8	IC Bus 0	B1 - D4A	Board B2 - YH
9	IC Bus 0	B1 - D4 (B or C)	Board B2 - YG
10	IC Bus 0	B2 - YF	Board B1 - D4D
11	IC Bus 0	B2 - YE	Board B1 - D4 E
12	IC Bus 1	B1 - B4C	Board B2 - YD
13	IC Bus 1	B1 - B4B	Board B2 - YC
14	Support bus	B1 - A3 (C)	Board A2 - YF
15	Processor bus for MSSS	A2 - YM	Board C2 - YJ
16	Processor bus for MSSS	A2 - YD	Board C2 - YK
17	Displays	A2 - ZD	Coaxial Connectors (0 - 7)
18	Displays	A2 - YC	Coaxial Connectors (8 - 15)
19	System diskette	A2 - ZF	System Diskette Drive
20	User diskette	A2 - ZE	User Diskette Drive
21	CE Panel	C2 - YA	CE Panel D1 - A1
22	ICA-PIO tag	B2 - X4	Board C2 - ZC
	ICA-PIO bus	B2 - X5	Board C2 - ZD
23	Connection of MPX	B2 - W2–W	Gate 01D - D3 (BD)
	Connection of MPX	B2 - W3–X	Gate 01D - D3 (GJ)
	Connection of MPX	B2 - W4–Y	Gate 01D - E3 (BD)
	Connection of MPX	B2 - W5–Z	Gate 01D - E3 (GJ)
24	ACA Interface 1	B2 - YN	Gate 01E - A6 (BD)
	ACA Interface 2	B2 - YP	Gate 01E - A6 (GJ)

Sequence number	Use of Cable	Location	
		From Board	To
25	Connection of FTA 2	B2 - ZA	Gate 01D - C2 (BD)
	Connection of FTA 2	B2 - ZB	Gate 01D - C2 (GJ)
	Connection of FTA 2	B2 - ZC	Gate 01D - D2 (BD)
Version 2	Connection of FTA 2	B2 - ZD	Gate 01D - D2 (GJ)
26	Connection of FTA 1	B2 - YA	Gate 01D - A2 (BD)
	Connection of FTA 1	B2 - YB	Gate 01D - A2 (GJ)
	Connection of FTA 1	B2 - YJ	Gate 01D - B2 (BD)
	Connection of FTA 1	B2 - YK	Gate 01D - B2 (GJ)
27	Connection of BMPX 1	B2 - B2–W	Gate 01D - F3 (BD)
	Connection of BMPX 1	B2 - B3–X	Gate 01D - F3 (GJ)
	Connection of BMPX 1	B2 - B4–Y	Gate 01D - G3 (BD)
	Connection of BMPX 1	B2 - B5–Z	Gate 01D - G3 (GJ)
28	Connection of FTA 3	B2 - ZE	Gate 01D - E2 (BD)
	Connection of FTA 3	B2 - ZF	Gate 01D - E2 (GJ)
	Connection of FTA 3	B2 - ZG	Gate 01D - F2 (BD)
Version 1, 2	Connection of FTA 3	B2 - ZH	Gate 01D - F2 (GJ)
29	Connection of BMPX 2	B2 - L2–W	Gate 01D - C2 (BD)
	Connection of BMPX 2	B2 - L3–X	Gate 01D - C2 (GJ)
	Connection of BMPX 2	B2 - L4–Y	Gate 01D - D2 (BD)
Version 2, 3	Connection of BMPX 2	B2 - L5–Z	Gate 01D - D2 (GJ)
30	Connection of HSC	B2 - P2–W	Gate 01D - E2 (BD)
	Connection of HSC	B2 - P3–X	Gate 01D - E2 (GJ)
	Connection of HSC	B2 - P4–Y	Gate 01D - F2 (BD)
Version 3	Connection of HSC	B2 - P5–Z	Gate 01D - F2 (GJ)
31	CE Panel	A2 - YB	CE Panel D1 - A3
32	OC Panel	A2 - YK	OCP Connector
33	I/O SS voltages sense	A2 - A4	Board A1 - ZC
34	Power supply 105	PS 105	A2 - YJ
35	Power compartment PS 102	PS 102	A2 - YA
36	Voltage Sense	A2 - A2	Power System
	Voltage Sense	A2 - A3	Power System
	ESD Sense/Control	A2 - A5 Plugged at pin side	Line Filter

Cable Locations for Gate 01A (continued)

Sequence number	Use of Cable	Location	
		From Board	To
37	Standard Power Interface	A2 - ZA	SPI - P00 CON00
38	PC	A2 - ZB	Board C1 - B4
39	CA Interface (line 36)	C2 - YD	Gate 01E - A4 - GJ
	CA Interface (line 37)	C2 - YM	Gate 01E - A5 - BD
	CA Interface (line 34)	C2 - YE	Gate 01E - A3 - GJ
	CA Interface (line 35)	C2 - YN	Gate 01E - A4 - BD
	CA Interface (line 32)	C2 - YF	Gate 01E - A2 - GJ
	CA Interface (line 33)	C2 - YP	Gate 01E - A3 - BD
	CA Interface (line 30)	C2 - YG	Gate 01E - A1 - GJ
	CA Interface (line 31)	C2 - YQ	Gate 01E - A2 - BD
40	Connection of MFCU	A1 - X2–W	Gate 01D - C1 (GJ)
	Connection of MFCU	A1 - X3–X	Gate 01D - C1 (BD)
	Connection of MFCU	A1 - X4–Y	Gate 01D - D1 (BD)
	Connection of MFCU	A1 - X5–Z	Gate 01D - A1 (BD)
	Connection of MFCU	A1 - W2–W	Gate 01D - E1 (GJ)
	Connection of MFCU	A1 - W3–X	Gate 01D - E1 (BD)
	Connection of MFCU	A1 - W4–Y	Gate 01D - F1 (BD)
	Connection of MFCU	A1 - W5–Z	Gate 01D - F1 (GJ)
	Connection of MFCU	A1 - YP	Gate 01D - B1 (GJ)
	Connection of MFCU	A1 - YQ	Gate 01D - D1 (GJ)
	Connection of MFCU	A1 - YR	Gate 01D - B1 (BD)
41	Remote link terminal	A2 - ZH	Tailgate 01E - A1 - BD
42	External Signal Bus	B1 - A3B	Gate 01D - G1
43	Voltage sense PU/BSM (PDL 5 only)	B1 - B4A	Board A2 - ZC

Cable Locations for Gate 01D

Sequence number	Use of Cable	Location	
		From Board	To
40	Interface to MFCU	01D-A1, E1, F1	MFCU Board B
41	Interface to MFCU	01D-B1, C1, D1	MFCU Board B
42	External Signals	01D-G1	I/O
43	FTA 1 Interface (Bus)	01D-A2	1st Control Unit
44	FTA 1 Interface (Tag)	01D-B2	1st Control Unit
45	FTA 2 Interface (Bus)	01D-C2	1st Control Unit
46	FTA 2 Interface (Tag)	01D-D2	1st Control Unit
47	MPX Interface (Bus)	01D-D3	1st Control Unit
48	MPX Interface (Tag)	01D-E3	1st Control Unit
49	BMPX 1 Interface (Bus)	01D-F3	1st Control Unit
50	BMPX 1 Interface (Tag)	01D-G3	1st Control Unit
51	BMPX 2 Interface (Bus)	01D-C2	1st Control Unit
52	BMPX 2 Interface (Tag)	01D-D2	1st Control Unit
53	FTA 3 Interface (Bus)	01D-E2	1st Control Unit
54	FTA 3 Interface (Tag)	01D-F2	1st Control Unit
55	HSC Interface (Bus)	01D-E2	1st Control Unit
56	HSC Interface (Tag)	01D-F2	1st Control Unit

Gate 01D

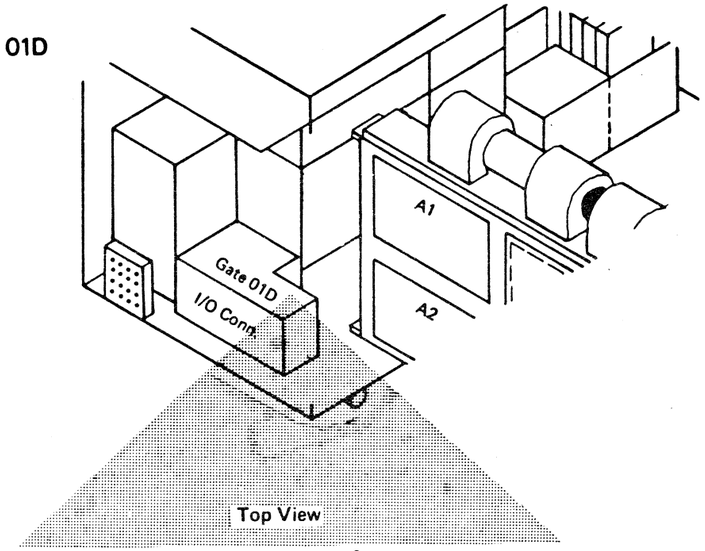

	1	2	3
A	40	43	
B	41	44	
C	41	45 or 51	
D	41	46 or 52	47
E	40	53 or 55	48
F	40	54 or 56	49
G	42	Spare	50
	BD GJ	BD GJ	BD GJ

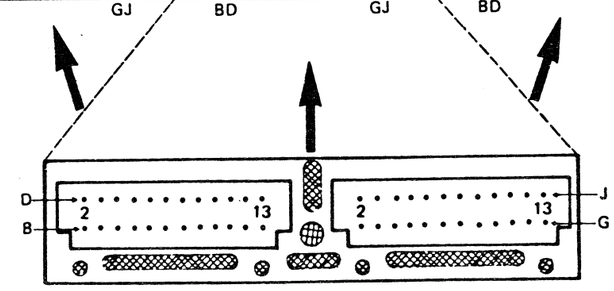

Interface Cable Routing: Card Pin to Tailgate

FTA 1 Cable Routing

SIGNAL NAME	CARD PIN	BOARD PIN	BRD CON.	TAIL GATE	CABLE TYPE
CTL1 BUS OUT BIT P	01A-B2E2-M10	01A-B2A1-A06	YA	01D-A2-B03	BUS
CTL1 BUS OUT BIT 0	01A-B2E2-S11	01A-B2A1-B06	YA	01D-A2-D04	BUS
CTL1 BUS OUT BIT 1	01A-B2E2-P06	01A-B2A1-D08	YA	01D-A2-B05	BUS
CTL1 BUS OUT BIT 2	01A-B2E2-U11	01A-B2A1-E06	YA	01D-A2-D06	BUS
CTL1 BUS OUT BIT 3	01A-B2E2-P12	01A-B2B1-B08	YA	01D-A2-B08	BUS
CTL1 BUS OUT BIT 4	01A-B2E2-P11	01A-B2B1-C06	YA	01D-A2-D09	BUS
CTL1 BUS OUT BIT 5	01A-B2E2-M12	01A-B2B1-D08	YA	01D-A2-B10	BUS
CTL1 BUS OUT BIT 6	01A-B2E2-M11	01A-B2B1-E06	YA	01D-A2-D11	BUS
CTL1 BUS OUT BIT 7	01A-B2E2-P10	01A-B2C1-A08	YA	01D-A2-B12	BUS
CTL1 CE COMM OUT	01A-B2E2-P07	01A-B2A1-E08	YA	01D-A2-B06	BUS
CTL1 CE COMM IN	01A-B2E2-U12				
CTL1 SYNC OUT AD4	01A-B2E2-M13	01A-B2C1-B06	YA	01D-A2-D13	BUS
CTL1 BUS IN BIT P	01A-B2E2-S08	01A-B2C1-E06	YB	01D-A2-G03	BUS
CTL1 BUS IN BIT 0	01A-B2E2-U06	01A-B2D1-A06	YB	01D-A2-J04	BUS
CTL1 BUS IN BIT 1	01A-B2E2-S06	01A-B2D1-C08	YB	01D-A2-G05	BUS
CTL1 BUS IN BIT 2	01A-B2E2-U07	01A-B2D1-D06	YB	01D-A2-J06	BUS
CTL1 BUS IN BIT 3	01A-B2E2-S07	01A-B2E1-A08	YB	01D-A2-G08	BUS
CTL1 BUS IN BIT 4	01A-B2E2-P02	01A-B2E1-B06	YB	01D-A2-J09	BUS
CTL1 BUS IN BIT 5	01A-B2E2-M02	01A-B2E1-C08	YB	01D-A2-G10	BUS
CTL1 BUS IN BIT 6	01A-B2E2-M03	01A-B2E1-D06	YB	01D-A2-J11	BUS
CTL1 BUS IN BIT 7	01A-B2E2-M04	01A-B2E1-E08	YB	01D-A2-G12	BUS
CTL1 SYNC IN	01A-B2F2-B13	01A-B2F1-A06	YB	01D-A2-J13	BUS
CTL1 TAG BUS BIT P	01A-B2E2-M07	01A-B2B1-C11	YJ	01D-B2-D09	TAG
CTL1 TAG BUS BIT 0	01A-B2E2-M06	01A-B2A1-A11	YJ	01D-B2-B03	TAG
CTL1 TAG BUS BIT 4	01A-B2E2-U02	01A-B2A1-D13	YJ	01D-B2-B05	TAG
CTL1 TAG BUS BIT 5	01A-B2E2-S03	01A-B2A1-B11	YJ	01D-B2-D04	TAG
CTL1 TAG BUS BIT 6	01A-B2E2-S02	01A-B2B1-B13	YJ	01D-B2-B08	TAG
CTL1 TAG BUS BIT 7	01A-B2E2-M08	01A-B2A1-E11	YJ	01D-B2-D06	TAG
CTL1 TAG GATE	01A-B2E2-S13	01A-B2B1-D13	YJ	01D-B2-B10	TAG
CTL1 RESPONSE	01A-B2E2-S04	01A-B2C1-A13	YJ	01D-B2-B12	TAG
CTL1 SEL HOLD AD4	01A-B2E2-S05	01A-B2B1-E11	YJ	01D-B2-D11	TAG
CTL1 RECYCLE	01A-B2E2-M09	01A-B2C1-B11	YJ	01D-B2-D13	TAG
CTL1 SELECT ACTIVE	01A-B2E2-U09	01A-B2C1-E11	YK	01D-B2-G03	TAG
CTL1 NORMAL END	01A-B2E2-U10	01A-B2D1-C13	YK	01D-B2-G05	TAG
CTL1 SEL ALERT1	01A-B2E2-P05	01A-B2E1-A13	YK	01D-B2-G08	TAG
CTL1 UNSEL ALERT 1	01A-B2E2-M05	01A-B2E1-E13	YK	01D-B2-G12	TAG
CTL1 TAG VALID	01A-B2E2-S09	01A-B2D1-A11	YK	01D-B2-J04	TAG
CTL1 CHECK END	01A-B2E2-P04	01A-B2D1-D11	YK	01D-B2-J06	TAG
CTL1 SEL ALERT 2	01A-B2E2-S10	01A-B2E1-B11	YK	01D-B2-J09	TAG

FTA 2 Cable Routing

SIGNAL NAME	CARD PIN	BOARD PIN	BRD CON.	TAIL GATE	CABLE TYPE
CTL2 BUS OUT BIT P	01A-B2L2-M10	01A-B2A6-A02	ZA	01D-C2-B03	BUS
CTL2 BUS OUT BIT 0	01A-B2L2-S11	01A-B2A6-B02	ZA	01D-C2-D04	BUS
CTL2 BUS OUT BIT 1	01A-B2L2-P06	01A-B2A6-D04	ZA	01D-C2-B05	BUS
CTL2 BUS OUT BIT 2	01A-B2L2-U11	01A-B2A6-E02	ZA	01D-C2-D06	BUS
CTL2 BUS OUT BIT 3	01A-B2L2-P12	01A-B2B6-B04	ZA	01D-C2-B08	BUS
CTL2 BUS OUT 3IT 4	01A-B2L2-P11	01A-B2B6-C02	ZA	01D-C2-D09	BUS
CTL2 BUS OUT BIT 5	01A-B2L2-M12	01A-B2B6-D04	ZA	01D-C2-B10	BUS
CTL2 BUS OUT BIT 6	01A-B2L2-M11	01A-B2B6-E02	ZA	01D-C2-D11	BUS
CTL2 BUS OUT BIT 7	01A-B2L2-P10	01A-B2C6-A04	ZA	01D-C2-B12	BUS
CTL2 CE COMM OUT	01A-B2L2-P07	01A-B2A6-E04	ZA	01D-C2-B06	BUS
CTL2 CE COMM IN	01A-B2L2-U12				
CTL2 SYNC OUT AD2	01A-B2L2-M13	01A-B2C6-B02	ZA	01D-C2-D13	BUS
CTL2 BUS IN BIT P	01A-B2L2-S08	01A-B2C6-E02	ZB	01D-C2-G03	BUS
CTL2 BUS IN BIT 0	01A-B2L2-U06	01A-B2D6-A02	ZB	01D-C2-J04	BUS
CTL2 BUS IN BIT 1	01A-B2L2-S06	01A-B2D6-C04	ZB	01D-C2-G05	BUS
CTL2 BUS IN BIT 2	01A-B2L2-U07	01A-B2D6-D02	ZB	01D-C2-J06	BUS
CTL2 BUS IN BIT 3	01A-B2L2-S07	01A-B2E6-A04	ZB	01D-C2-G08	BUS
CTL2 BUS IN BIT 4	01A-B2L2-P02	01A-B2E6-B02	ZB	01D-C2-J09	BUS
CTL2 BUS IN BIT 5	01A-B2L2-M02	01A-B2E6-C04	ZB	01D-C2-G10	BUS
CTL2 BUS IN BIT 6	01A-B2L2-M03	01A-B2E6-D02	ZB	01D-C2-J11	BUS
CTL2 BUS IN BIT 7	01A-B2L2-M04	01A-B2E6-E04	ZB	01D-C2-G12	BUS
CTL2 SYNC IN	01A-B2M2-B13	01A-B2F6-A02	ZB	01D-C2-J13	BUS
CTL2 TAG BUS BIT P	01A-B2L2-M07	01A-B2H6-A02	ZC	01D-D2-D09	TAG
CTL2 TAG BUS BIT 0	01A-B2L2-M06	01A-B2F6-D02	ZC	01D-D2-B03	TAG
CTL2 TAG BUS BIT 4	01A-B2L2-U02	01A-B2G6-B04	ZC	01D-D2-B05	TAG
CTL2 TAG BUS BIT 5	01A-B2L2-S03	01A-B2F6-E02	ZC	01D-D2-D04	TAG
CTL2 TAG BUS BIT 6	01A-B2L2-S02	01A-B2G6-E04	ZC	01D-D2-B08	TAG
CTL2 TAG BUS BIT 7	01A-B2L2-M08	01A-B2G6-C02	ZC	01D-D2-D06	TAG
CTL2 TAG GATE	01A-B2L2-S13	01A-B2H6-B04	ZC	01D-D2-B10	TAG
CTL2 RESPONSE	01A-B2L2-S04	01A-B2H6-D04	ZC	01D-D2-B12	TAG
CTL2 SEL HOLD AD2	01A-B2L2-S05	01A-B2H6-C02	ZC	01D-D2-D11	TAG
CTL2 RECYCLE	01A-B2L2-M09	01A-B2H6-E02	ZC	01D-D2-D13	TAG
CTL2 SELECT ACTIVE	01A-B2L2-U09	01A-B2J6-C02	ZD	01D-D2-G03	TAG
CTL2 NORMAL END	01A-B2L2-U10	01A-B2K6-A04	ZD	01D-D2-G05	TAG
CTL2 SEL ALERT 1	01A-B2L2-P05	01A-B2K6-D04	ZD	01D-D2-G08	TAG
CTL2 UNSEL ALERT 1	01A-B2L2-M05	01A-B2L6-C04	ZD	01D-D2-G12	TAG
CTL2 TAG VALID	01A-B2L2-S09	01A-B2J6-D02	ZD	01D-D2-J04	TAG
CTL2 CHECK END	01A-B2L2-P04	01A-B2K6-B02	ZD	01D-D2-J06	TAG
CTL2 SEL ALERT 2	01A-B2L2-S10	01A-B2K6-E02	ZD	01D-D2-J09	TAG

FTA 3 Cable Routing

SIGNAL NAME	CARD PIN	BOARD PIN	BRD CON.	TAIL GATE	CABLE TYPE
CTL3 BUS OUT BIT P	01A-B2P2-M10	01A-B2M6-B02	ZE	01D-E2-B03	BUS
CTL3 BUS OUT BIT 0	01A-B2P2-S11	01A-B2M6-C02	ZE	01D-E2-D04	BUS
CTL3 BUS OUT BIT 1	01A-B2P2-P06	01A-B2M6-E04	ZE	01D-E2-B05	BUS
CTL3 BUS OUT BIT 2	01A-B2P2-U11	01A-B2N6-A02	ZE	01D-E2-D06	BUS
CTL3 BUS OUT BIT 3	01A-B2P2-P12	01A-B2N6-C04	ZE	01D-E2-B08	BUS
CTL3 BUS OUT BIT 4	01A-B2P2-P11	01A-B2N6-D02	ZE	01D-E2-D09	BUS
CTL3 BUS OUT BIT 5	01A-B2P2-M12	01A-B2N6-E04	ZE	01D-E2-B10	BUS
CTL3 BUS OUT BIT 6	01A-B2P2-M11	01A-B2P6-A02	ZE	01D-E2-D11	BUS
CTL3 BUS OUT BIT 7	01A-B2P2-P10	01A-B2P6-B04	ZE	01D-E2-B12	BUS
CTL3 CE COMM OUT	01A-B2P2-P07	01A-B2N6-A04	ZE	01D-E2-B06	BUS
CTL3 CE COMM IN	01A-B2P2-U12				
CTL3 SYNC OUT AD1	01A-B2P2-M13	01A-B2P6-C02	ZE	01D-E2-D13	BUS
CTL3 BUS IN BIT P	01A-B2P2-S08	01A-B2Q6-A02	ZF	01D-E2-G03	BUS
CTL3 BUS IN BIT 0	01A-B2P2-U06	01A-B2Q6-B02	ZF	01D-E2-J04	BUS
CTL3 BUS IN BIT 1	01A-B2P2-S06	01A-B2Q6-D04	ZF	01D-E2-G05	BUS
CTL3 BUS IN BIT 2	01A-B2P2-U07	01A-B2Q6-E02	ZF	01D-E2-J06	BUS
CTL3 BUS IN BIT 3	01A-B2P2-S07	01A-B2R6-B04	ZF	01D-E2-G08	BUS
CTL3 BUS IN BIT 4	01A-B2P2-P02	01A-B2R6-C02	ZF	01D-E2-J09	BUS
CTL3 BUS IN BIT 5	01A-B2P2-M02	01A-B2R6-D04	ZF	01D-E2-G10	BUS
CTL3 BUS IN BIT 6	01A-B2P2-M03	01A-B2R6-E02	ZF	01D-E2-J11	BUS
CTL3 BUS IN BIT 7	01A-B2P2-M04	01A-B2S6-A04	ZF	01D-E2-G12	BUS
CTL3 SYNC IN	01A-B2Q2-B13	01A-B2S6-B02	ZF	01D-E2-J13	BUS
CTL3 TAG BUS BIT P	01A-B2P2-M07	01A-B2U6-B02	ZG	01D-F2-D09	TAG
CTL3 TAG BUS BIT 0	01A-B2P2-M06	01A-B2S6-E02	ZG	01D-F2-B03	TAG
CTL3 TAG BUS BIT 4	01A-B2P2-U02	01A-B2T6-C04	ZG	01D-F2-B05	TAG
CTL3 TAG BUS BIT 5	01A-B2P2-S03	01A-B2T6-A02	ZG	01D-F2-D04	TAG
CTL3 TAG BUS BIT 6	01A-B2P2-S02	01A-B2U6-A04	ZG	01D-F2-B08	TAG
CTL3 TAG BUS BIT 7	01A-B2P2-M08	01A-B2T6-D02	ZG	01D-F2-D06	TAG
CTL3 TAG GATE	01A-B2P2-S13	01A-B2U6-C04	ZG	01D-F2-B10	TAG
CTL3 RESPONSE	01A-B2P2-S04	01A-B2U6-E04	ZG	01D-F2-B12	TAG
CTL3 SEL HOLD AD1	01A-B2P2-S05	01A-B2U6-D02	ZG	01D-F2-D11	TAG
CTL3 RECYCLE	01A-B2P2-M09	01A-B2V6-A02	ZG	01D-F2-D13	TAG
CTL3 SELECT ACTIVE	01A-B2P2-U09	01A-B2V6-D02	ZH	01D-F2-G03	TAG
CTL3 NORMAL END	01A-B2P2-U10	01A-B2W6-B04	ZH	01D-F2-G05	TAG
CTL3 SEL ALERT 1	01A-B2P2-P05	01A-B2W6-E04	ZH	01D-F2-G08	TAG
CTL3 UNSEL ALERT 1	01A-B2P2-M05	01A-B2V6-E02	ZH	01D-F2-G12	TAG
CTL3 TAG VALID	01A-B2P2-S09	01A-B2V6-E02	ZH	01D-F2-J04	TAG
CTL3 CHECK END	01A-B2K2-P04	01A-B2V6-D02	ZH	01D-D2-J06	TAG
CTL3 SEL ALERT 2	01A-B2K2-S10	01A-B2X6-A02	ZH	01D-D2-J09	TAG

DCA Driver Cable Routing

CARD PIN	BOARD PIN	BOARD CONN.	DCA PORT
01A-A2J4-J09	01A-A2J6-D04	A2ZD	0
01A-A2J4-J13	01A-A2J6-E02	A2ZD	1
01A-A2J4-G03	01A-A2K6-A04	A2ZD	2
01A-A2J4-G13	01A-A2K6-B02	A2ZD	3
01A-A2J4-D09	01A-A2K6-E02	A2ZD	4
01A-A2J4-B10	01A-A2L6-A04	A2ZD	5
01A-A2J4-D13	01A-A2L6-B02	A2ZD	6
01A-A2J4-D05	01A-A2L6-C04	A2ZD	7
01A-A2J2-J09	01A-A2F1-E08	A2YC	8
01A-A2J2-J13	01A-A2G1-A06	A2YC	9
01A-A2J2-G03	01A-A2G1-B08	A2YC	10
01A-A2J2-G13	01A-A2G1-C06	A2YC	11
01A-A2J2-D09	01A-A2H1-A06	A2YC	12
01A-A2J2-B10	01A-A2H1-B08	A2YC	13
01A-A2J2-D13	01A-A2H1-C06	A2YC	14
01A-A2J2-D05	01A-A2H1-D08	A2YC	15

External Signal Bus Cable Routing

SIGNAL NAME	Board 01A-B1A3-	Gate OLD-G1)GJ)-
External Signal Bus Bit 0	B04	D04
Bit 1	B08	B05
Bit 2	B10	D06
Bit 3	B14	B08
Bit 4	B15	D09
Bit 5	B19	B10
Bit 6	B20	D11
Bit 7	B23	B12

HSC Cable Routing

SIGNAL NAME	CARD TOP CONNECTOR PIN	TAILGATE PIN	CABLE TYP
BUS OUT BIT P	01A-B2P2-W03	01D-E2-B03	BUS
BUS OUT BIT 0	01A-B2P2-W24	01D-E2-D04	BUS
BUS OUT BIT 1	01A-B2P2-W05	01D-E2-B05	BUS
BUS OUT BIT 2	01A-B2P2-W26	01D-E2-D06	BUS
BUS OUT BIT 3	01A-B2P2-W08	01D-E2-B08	BUS
BUS OUT BIT 4	01A-B2P2-W29	01D-E2-D09	BUS
BUS OUT BIT 5	01A-B2P2-W10	01D-E2-B10	BUS
BUS OUT BIT 6	01A-B2P2-W31	01D-E2-D11	BUS
BUS OUT BIT 7	01A-B2P2-W12	01D-E2-B12	BUS
BUS IN BIT P	01A-B2P2-X03	01D-E2-G03	BUS
BUS IN BIT 0	01A-B2P2-X24	01D-E2-J04	BUS
BUS IN BIT 1	01A-B2P2-X05	01D-E2-G05	BUS
BUS IN BIT 2	01A-B2P2-X26	01D-E2-J06	BUS
BUS IN BIT 3	01A-B2P2-X08	01D-E2-G08	BUS
BUS IN BIT 4	01A-B2P2-X29	01D-E2-J09	BUS
BUS IN BIT 5	01A-B2P2-X10	01D-E2-G10	BUS
BUS IN BIT 6	01A-B2P2-X31	01D-E2-J11	BUS
BUS IN BIT 7	01A-B2P2-X12	01D-E2-G12	BUS
MARK OUT	01A-B2P2-W33	01D-E2-D13	BUS
MARK IN	01A-B2P2-X33	01D-E2-J13	BUS
ADDRESS OUT	01A-B2P2-Y10	01D-F2-B10	TAG
COMMAND OUT	01A-B2P2-Y31	01D-F2-D11	TAG
SERVICE OUT	01A-B2P2-Y33	01D-F2-D13	TAG
DATA OUT	01A-B2P2-Z10	01D-F2-G10	TAG
SUPRESS OUT	01A-B2P2-Y12	01D-F2-G12	TAG
OPERATIONAL OUT	01A-B2P2-Z33	01D-F2-J13	TAG
HOLD/SELECT OUT	01A-B2P2-Y29	01D-F2-D09	TAG
COND SUPPR OUT	01A-B2P2-Y12	01D-F2-B12	TAG
METERING OUT	01A-B2P2-Z24	01D-E2-J04	TAG
ADDRESS IN	01A-B2P2-Y05	01D-F2-B05	TAG
STATUS IN	01A-B2P2-Y24	01D-F2-D04	TAG
SERVICE IN	01A-B2P2-Y26	01D-F2-D06	TAG
DATA IN	01A-B2P2-Z08	01D-F2-G08	TAG
DISCONNECT IN	01A-B2P2-Z31	01D-F2-J11	TAG
OPERATIONAL IN	01A-B2P2-Y03	01D-F2-B03	TAG
SELECT IN	01A-B2P2-Y08	01D-F2-B08	TAG
REQUEST IN	01A-B2P2-Z26	01D-F2-J06	TAG
METERING IN	01A-B2P2-Z05	01D-F2-G05	TAG

MPX Cable Routing

SIGNAL NAME	CARD TOP CONNECTOR PIN	TAILGATE PIN	CABLE TYP
BUS OUT BIT P	01A-B2W2-W03	01D-D3-B03	BUS
BUS OUT BIT 0	01A-B2W2-W24	01D-D3-D04	BUS
BUS OUT BIT 1	01A-B2W2-W05	01D-D3-B05	BUS
BUS OUT BIT 2	01A-B2W2-W26	01D-D3-D06	BUS
BUS OUT BIT 3	01A-B2W2-W08	01D-D3-B08	BUS
BUS OUT BIT 4	01A-B2W2-W29	01D-D3-D09	BUS
BUS OUT BIT 5	01A-B2W2-W10	01D-D3-B10	BUS
BUS OUT BIT 6	01A-B2W2-W31	01D-D3-D11	BUS
BUS OUT BIT 7	01A-B2W2-W12	01D-D3-B12	BUS
BUS IN BIT P	01A-B2W2-X03	01D-D3-G03	BUS
BUS IN BIT 0	01A-B2W2-X24	01D-D3-J04	BUS
BUS IN BIT 1	01A-B2W2-X05	01D-D3-G05	BUS
BUS IN BIT 2	01A-B2W2-X26	01D-D3-J06	BUS
BUS IN BIT 3	01A-B2W2-X08	01D-D3-G08	BUS
BUS IN BIT 4	01A-B2W2-X29	01D-D3-J09	BUS
BUS IN BIT 5	01A-B2W2-X10	01D-D3-G10	BUS
BUS IN BIT 6	01A-B2W2-X31	01D-D3-J11	BUS
BUS IN BIT 7	01A-B2W2-X12	01D-D3-G12	BUS
MARK OUT	01A-B2W2-W33	01D-D3-D13	BUS
MARK IN	01A-B2W2-X33	01D-D3-J13	BUS
ADDRESS OUT	01A-B2W2-Y10	01D-E3-B10	TAG
COMMAND OUT	01A-B2W2-Y31	01D-E3-D11	TAG
SERVICE OUT	01A-B2W2-Y33	01D-E3-D13	TAG
DATA OUT	01A-B2W2-Z10	01D-E3-G10	TAG
SUPRESS OUT	01A-B2W2-Y12	01D-E3-G12	TAG
OPERATIONAL OUT	01A-B2W2-Z33	01D-E3-J13	TAG
HOLD/SELECT OUT	01A-B2W2-Y29	01D-E3-D09	TAG
COND SUPPR OUT	01A-B2W2-Y12	01D-E3-B12	TAG
METERING OUT	01A-B2W2-Z24	01D-E3-J04	TAG
ADDRESS IN	01A-B2W2-Y05	01D-E3-B05	TAG
STATUS IN	01A-B2W2-Y24	01D-E3-D04	TAG
SERVICE IN	01A-B2W2-Y26	01D-E3-D06	TAG
DATA IN	01A-B2W2-Z08	01D-E3-G08	TAG
DISCONNECT IN	01A-B2W2-Z31	01D-E3-J11	TAG
OPERATIONAL IN	01A-B2W2-Y03	01D-E3-B03	TAG
SELECT IN	01A-B2W2-Y08	01D-E3-B08	TAG
REQUEST IN	01A-B2W2-Z26	01D-E3-J06	TAG
METERING IN	01A-B2W2-Z05	01D-E3-G05	TAG

BMPX 1 Cable Routing

SIGNAL NAME	CARD TOP CONNECTOR PIN	TAILGATE PIN	CABLE TYP
BUS OUT BIT P	01A-B2B2-W03	01D-F3-B03	BUS
BUS OUT BIT 0	01A-B2B2-W24	01D-F3-D04	BUS
BUS OUT BIT 1	01A-B2B2-W05	01D-F3-B05	BUS
BUS OUT BIT 2	01A-B2B2-W26	01D-F3-D06	BUS
BUS OUT BIT 3	01A-B2B2-W08	01D-F3-B08	BUS
BUS OUT BIT 4	01A-B2B2-W29	01D-F3-D09	BUS
BUS OUT BIT 5	01A-B2B2-W10	01D-F3-B10	BUS
BUS OUT BIT 6	01A-B2B2-W31	01D-F3-D11	BUS
BUS OUT BIT 7	01A-B2B2-W12	01D-F3-B12	BUS
BUS IN BIT P	01A-B2B2-X03	01D-F3-G03	BUS
BUS IN BIT 0	01A-B2B2-X24	01D-F3-J04	BUS
BUS IN BIT 1	01A-B2B2-X05	01D-F3-G05	BUS
BUS IN BIT 2	01A-B2B2-X26	01D-F3-J06	BUS
BUS IN BIT 3	01A-B2B2-X08	01D-F3-G08	BUS
BUS IN BIT 4	01A-B2B2-X29	01D-F3-J09	BUS
BUS IN BIT 5	01A-B2B2-X10	01D-F3-G10	BUS
BUS IN BIT 6	01A-B2B2-X31	01D-F3-J11	BUS
BUS IN BIT 7	01A-B2B2-X12	01D-F3-G12	BUS
MARK OUT	01A-B2B2-W33	01D-F3-D13	BUS
MARK IN	01A-B2B2-X33	01D-F3-J13	BUS
ADDRESS OUT	01A-B2B2-Y10	01D-G3-B10	TAG
COMMAND OUT	01A-B2B2-Y31	01D-G3-D11	TAG
SERVICE OUT	01A-B2B2-Y33	01D-G3-D13	TAG
DATA OUT	01A-B2B2-Z10	01D-G3-G10	TAG
SUPRESS OUT	01A-B2B2-Y12	01D-G3-G12	TAG
OPERATIONAL OUT	01A-B2B2-Z33	01D-G3-J13	TAG
HOLD/SELECT OUT	01A-B2B2-Y29	01D-G3-D09	TAG
COND SUPPR OUT	01A-B2B2-Y12	01D-G3-B12	TAG
METERING OUT	01A-B2B2-Z24	01D-G3-J04	TAG
ADDRESS IN	01A-B2B2-Y05	01D-G3-B05	TAG
STATUS IN	01A-B2B2-Y24	01D-G3-D04	TAG
SERVICE IN	01A-B2B2-Y26	01D-G3-D06	TAG
DATA IN	01A-B2B2-Z08	01D-G3-G08	TAG
DISCONNECT IN	01A-B2B2-Z31	01D-G3-J11	TAG
OPERATIONAL IN	01A-B2B2-Y03	01D-G3-B03	TAG
SELECT IN	01A-B2B2-Y08	01D-G3-B08	TAG
REQUEST IN	01A-B2B2-Z26	01D-G3-J06	TAG
METERING IN	01A-B2B2-Z05	01D-G3-G05	TAG

BMPX 2 Cable Routing

SIGNAL NAME	CARD TOP CONNECTOR PIN	TAILGATE PIN	CABLE TYP
BUS OUT BIT P	01A-B2L2-W03	01D-C2-B03	BUS
BUS OUT BIT 0	01A-B2L2-W24	01D-C2-D04	BUS
BUS OUT BIT 1	01A-B2L2-W05	01D-C2-B05	BUS
BUS OUT BIT 2	01A-B2L2-W26	01D-C2-D06	BUS
BUS OUT BIT 3	01A-B2L2-W08	01D-C2-B08	BUS
BUS OUT BIT 4	01A-B2L2-W29	01D-C2-D09	BUS
BUS OUT BIT 5	01A-B2L2-W10	01D-C2-B10	BUS
BUS OUT BIT 6	01A-B2L2-W31	01D-C2-D11	BUS
BUS OUT BIT 7	01A-B2L2-W12	01D-C2-B12	BUS
BUS IN BIT P	01A-B2L2-X03	01D-C2-G03	BUS
BUS IN BIT 0	01A-B2L2-X24	01D-C2-J04	BUS
BUS IN BIT 1	01A-B2L2-X05	01D-C2-G05	BUS
BUS IN BIT 2	01A-B2L2-X26	01D-C2-J06	BUS
BUS IN BIT 3	01A-B2L2-X08	01D-C2-G08	BUS
BUS IN BIT 4	01A-B2L2-X29	01D-C2-J09	BUS
BUS IN BIT 5	01A-B2L2-X10	01D-C2-G10	BUS
BUS IN BIT 6	01A-B2L2-X31	01D-C2-J11	BUS
BUS IN BIT 7	01A-B2L2-X12	01D-C2-G12	BUS
MARK OUT	01A-B2L2-W33	01D-C2-D13	BUS
MARK IN	01A-B2L2-X33	01D-C2-J13	BUS
ADDRESS OUT	01A-B2L2-Y10	01D-D2-B10	TAG
COMMAND OUT	01A-B2L2-Y31	01D-D2-D11	TAG
SERVICE OUT	01A-B2L2-Y33	01D-D2-D13	TAG
DATA OUT	01A-B2L2-Z10	01D-D2-G10	TAG
SUPRESS OUT	01A-B2L2-Y12	01D-D2-G12	TAG
OPERATIONAL OUT	01A-B2L2-Z33	01D-D2-J13	TAG
HOLD/SELECT OUT	01A-B2L2-Y29	01D-D2-D09	TAG
COND SUPPR OUT	01A-B2L2-Y12	01D-D2-B12	TAG
METERING OUT	01A-B2L2-Z24	01D-D2-J04	TAG
ADDRESS IN	01A-B2L2-Y05	01D-D2-B05	TAG
STATUS IN	01A-B2L2-Y24	01D-D2-D04	TAG
SERVICE IN	01A-B2L2-Y26	01D-D2-D06	TAG
DATA IN	01A-B2L2-Z08	01D-D2-G08	TAG
DISCONNECT IN	01A-B2L2-Z31	01D-D2-J11	TAG
OPERATIONAL IN	01A-B2L2-Y03	01D-D2-B03	TAG
SELECT IN	01A-B2L2-Y08	01D-D2-B08	TAG
REQUEST IN	01A-B2L2-Z26	01D-D2-J06	TAG
METERING IN	01A-B2L2-Z05	01D-D2-G05	TAG

IC-Bus 0 and 1

General Information

The integrated channel bus is the link between the processing unit and the adapters of the system. The bus is two bytes wide (data/address path) and also contains the request/response control lines. The IC-bus consists of three different types of lines

- Ring lines 1
- Star lines 2
- Stub lines 3

which are routed to the adapter in three different ways as shown below.

The 4331/2 system has two independently working IC-buses each servicing three adapters. The two buses are named IC-bus 0 and IC-bus 1.

Five different adapters (MPX/CA, SCA2, FTA2, FTA3, HSC) can be attached to the IC-bus 0, but only three can be attached at one time. This results in three base configurations (version 1, 2 and 3).
Only three different adapters (FTA1, SCA1, BBA 0/1) can be attached to the IC-bus 1. This results in only one base configuration.
The base configuration equals the maximum configuration of the bus. Depending on the configuration of the system only one or two adapters may be attached to IC-bus.

IC-Bus Adapter Addressing

The system uses a logical and physical address scheme to address the IC-bus adapters. The table below shows the relationship of the address schemes.

IC-Bus Number	Adapter	Logical Address	Physical Address
0	HSC	0	1
	FTA 3	1	2
	FTA 2 or BMPX 2	2	4
	MPX/CA	3	6
1	FTA 1	4	9
	BMPX 1	5	A
	BBA 0/1	7	E

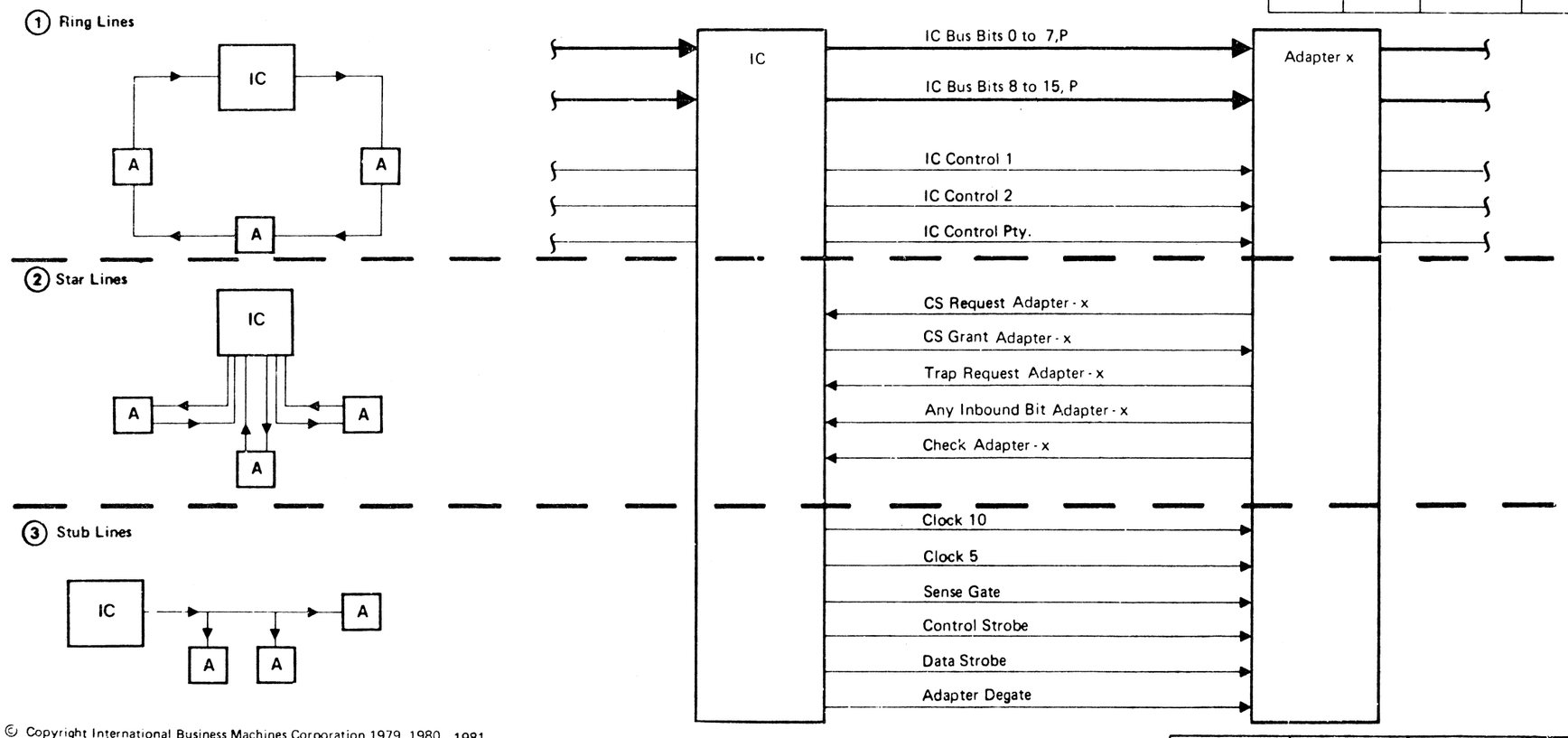

IC Bus 0 and 1 (continued)

IC Bus Configuration

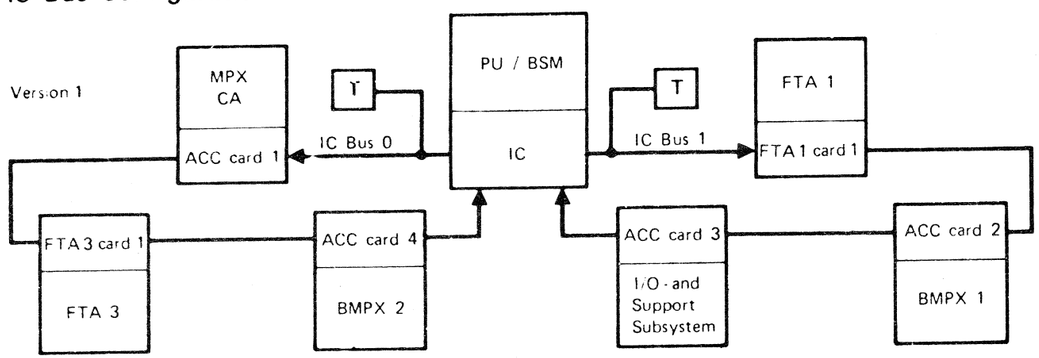

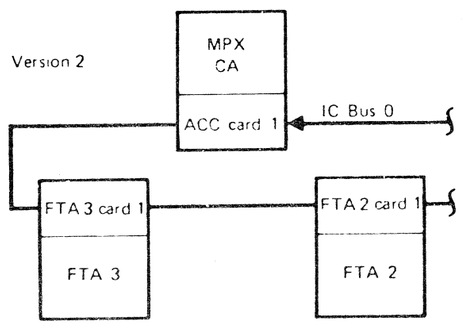

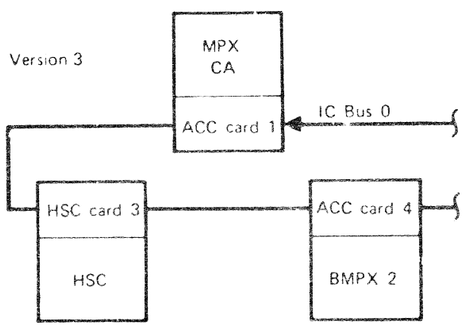

Cable Layout of IC Bus 0 and 1

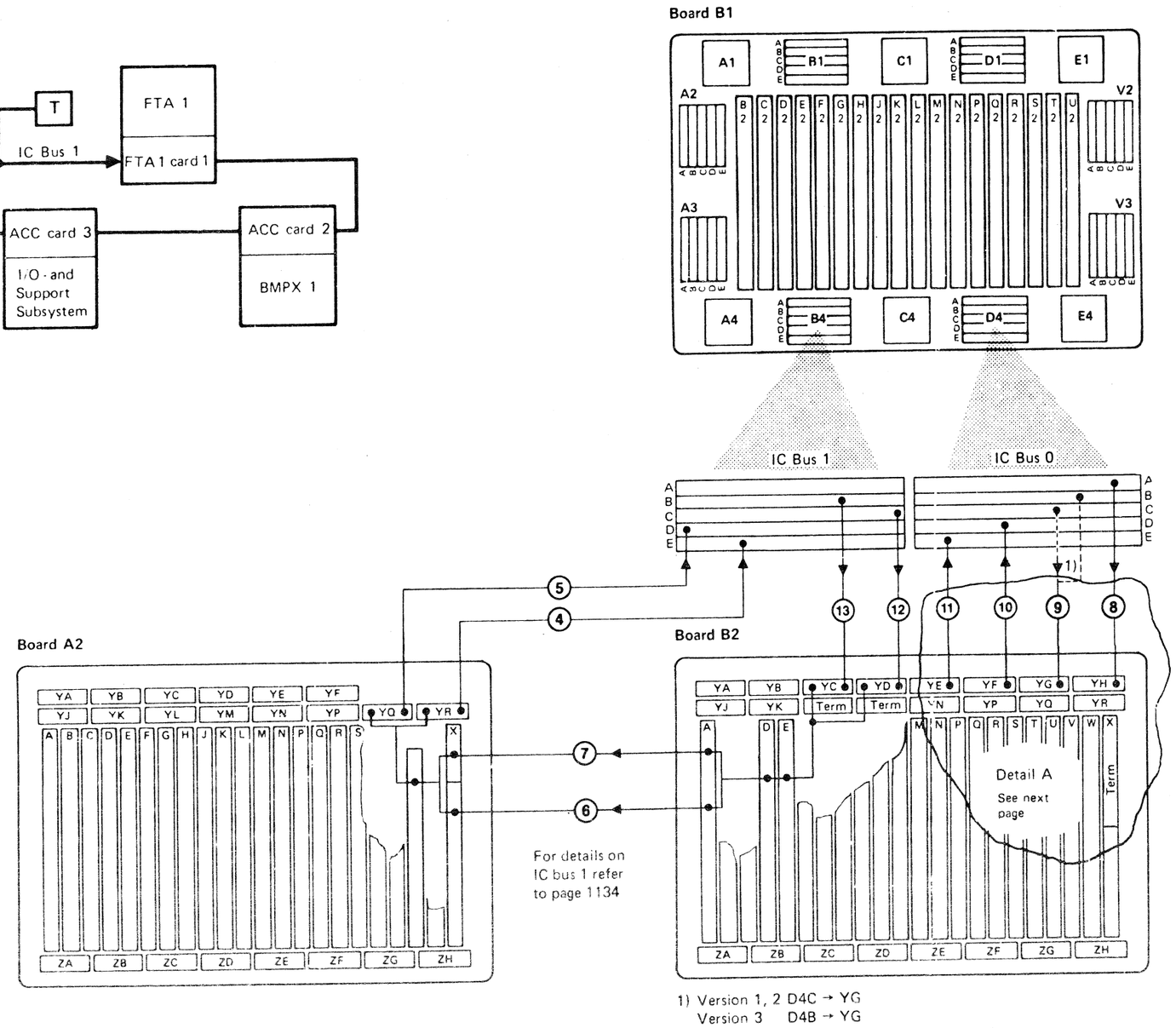

Cable Layout of IC Bus 0—Detail A

Configuration
Version 1

BMPX 2	B2 N2
FTA 3	B2 P2
MPX	B2 V2

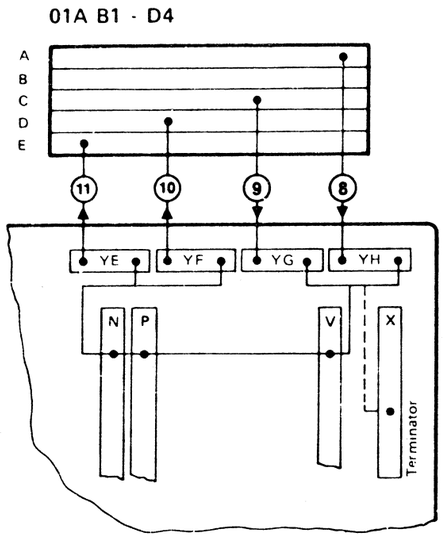

Configuration
Version 3

BMPX 2	B2 N2
HSC	B2 R2
MPX	B2 V2

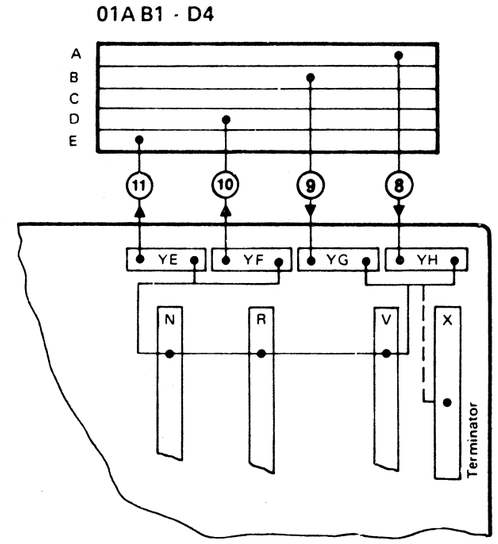

Configuration
Version 2

FTA 2	B2 L2
FTA 3	B2 P2
MPX	B2 V2

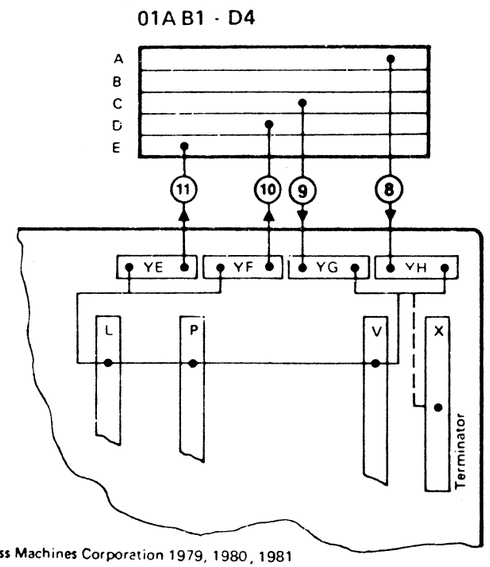

IC-Bus 0

Signal Names of IC Bus 0 Cables

Cable Number 8

From 01A-B1	To 01A-B2*	Signal Name
D4A02	V1D08	- IC Bus 0 Bit P,0-7
D4A03	V1D06	- IC Bus 0 Bit 0
D4A04	V1E06	- IC Bus 0 Bit 1
D4A06	W1A08	- IC Bus 0 Bit 2
D4A07	W1B06	- IC Bus 0 Bit 3
D4A08	W1B08	- IC Bus 0 Bit 4
D4A10	W1C06	- IC Bus 0 Bit 5
D4A11	W1C08	- IC Bus 0 Bit 6
D4A12	W1D06	- IC Bus 0 Bit 7
D4A14	W1E08	+ IC 0 Control 1
D4A15	X1A06	+ IC 0 Control 2
D4A16	X1A08	- IC 0 Control Parity
D4A18	X1B06	- IC CS Request Adapter 3
D4A19	X1B08	- IC CS Grant Adapter 3
D4A20	X1C06	- IC Trap 1 Request Adapter 3
D4A22	X1E08	- IC Trap 2 Request Adapter 3
D4A23	X1D08	+ IC Any Inbound Bit Adapter 3
D4A24	X1E06	- IC Check Adapter 3

* Connector YH

Cable Number 9 Version 1, 2

From 01A-B1	To 01A-B2*	Signal Name
D4C02	S1E08	- IC Bus 0 Bit P,8-15
D4C03	S1E06	- IC Bus 0 Bit 8
D4C04	T1A06	- IC Bus 0 Bit 9
D4C06	T1B08	- IC Bus 0 Bit 10
D4C07	T1C06	- IC Bus 0 Bit 11
D4C08	T1C08	- IC Bus 0 Bit 12
D4C10	T1D06	- IC Bus 0 Bit 13
D4C11	T1D08	- IC Bus 0 Bit 14
D4C12	T1E06	- IC Bus 0 Bit 15
D4C14	U1A08	- IC Clock 5A
D4C15	U1B06	- IC Clock 10A
D4C18	U1C06	- IC CS Request Adapter 1
D4C19	U1C08	- IC CS Grant Adapter 1
D4C20	U1D06	- IC Trap 1 Request Adapter 1
D4C21	V1A08	- IC Trap 2 Request Adapter 1
D4C23	V1E08	+ IC Any Inbound Bit Adapter 1
D4C24	V1A06	- IC Check Adapter 0/1

* Connector YG

Cable Number 9 Version 3

From 01A-B1	To 01A-B2*	Signal Name
D4B02	S1E08	- IC Bus 0 Bit P, 8-15
D4B03	S1E06	- IC Bus 0 Bit 8
D4B04	T1A06	- IC Bus 0 Bit 9
D4B06	T1B08	- IC Bus 0 Bit 10
D4B07	T1C06	- IC Bus 0 Bit 11
D4B08	T1C08	- IC Bus 0 Bit 12
D4B10	T1D06	- IC Bus 0 Bit 13
D4B11	T1D08	- IC Bus 0 Bit 14
D4B12	T1E06	- IC Bus 0 Bit 15
D4B14	U1A08	- IC Clock 5A
D4B15	U1B06	- IC Clock 10A
D4B16	U1B08	+ Status Mode Adapter 0
D4B18	U1C06	- IC CS Request Adapter 0
D4B19	U1C08	- IC CS Grant Adapter 0
D4B20	U1D06	- IC Trap 1 Request Adapter 0
D4B22	V1A08	- IC Trap 2 Request Adapter 0
D4B23	V1E08	+ IC Any Inbound Bit Adapter 0
D4B24	V1A06	- IC Check Adapter 0/1

* Connector YG

Cable Number 10

From 01A-B2*	To 01A-B1	Signal Name
Q1A08	D4D02	- IC Bus 0 Bit P, (0-7)
Q1A06	D4D03	- IC Bus 0 Bit 0
Q1B06	D4D04	- IC Bus 0 Bit 1
Q1C08	D4D06	- IC Bus 0 Bit 2
Q1D06	D4D07	- IC Bus 0 Bit 3
Q1D08	D4D08	- IC Bus 0 Bit 4
Q1E06	D4D10	- IC Bus 0 Bit 5
Q1E08	D4D11	- IC Bus 0 Bit 6
R1A06	D4D12	- IC Bus 0 Bit 7
R1B08	D4D14	+ IC 0 Control Bit 1
R1C06	D4D15	+ IC 0 Control Bit 2
R1C08	D4D16	- IC 0 Control P
R1D06	D4D18	- IC CS Request Adapter 2
R1D08	D4D19	- IC CS Grant Adapter 2
R1E06	D4D20	- IC Trap 1 Request 2
S1B08	D4D22	- IC Trap 2 Request 2
S1A08	D4D23	+ IC Any Inbound Bit Adapter 2
S1B06	D4D24	- IC Check Adapter 2

* Connector YF

Cable Number 11

From 01A-B2*	To 01A-B1	Signal Name
M1B08	D4E02	- IC Bus 0 Bit, P, 8-15
M1B06	D4E03	- IC Bus 0 Bit 8
M1C06	D4E04	- IC Bus 0 Bit 9
M1D08	D4E06	- IC Bus 0 Bit 10
M1E06	D4E07	- IC Bus 0 Bit 11
M1B08	D4E08	- IC Bus 0 Bit 12
N1A06	D4E10	- IC Bus 0 Bit 13
N1A08	D4E11	- IC Bus 0 Bit 14
N1B06	D4E12	- IC Bus 0 Bit 15
N1C08	D4E14	- IC Clock 5B
N1D06	D4E15	- IC Clock 10B
N1D08	D4E16	- IC Clock 5C
P1C08	D4E22	- IC Clock 10C

* Connector YE

Cable Number 12

From 01A-B1	To 01A-B2*	Signal Name
B4C14	K1D08	- IC 0 Data Strobe
B4C15	K1B06	- IC 0 Control Strobe
B4C16	K1E08	- IC 0 Sense Gate

* Connector YD

IC Bus 0 Ring Lines

This page shows the IC bus 0 'bus ring lines' for version 1.

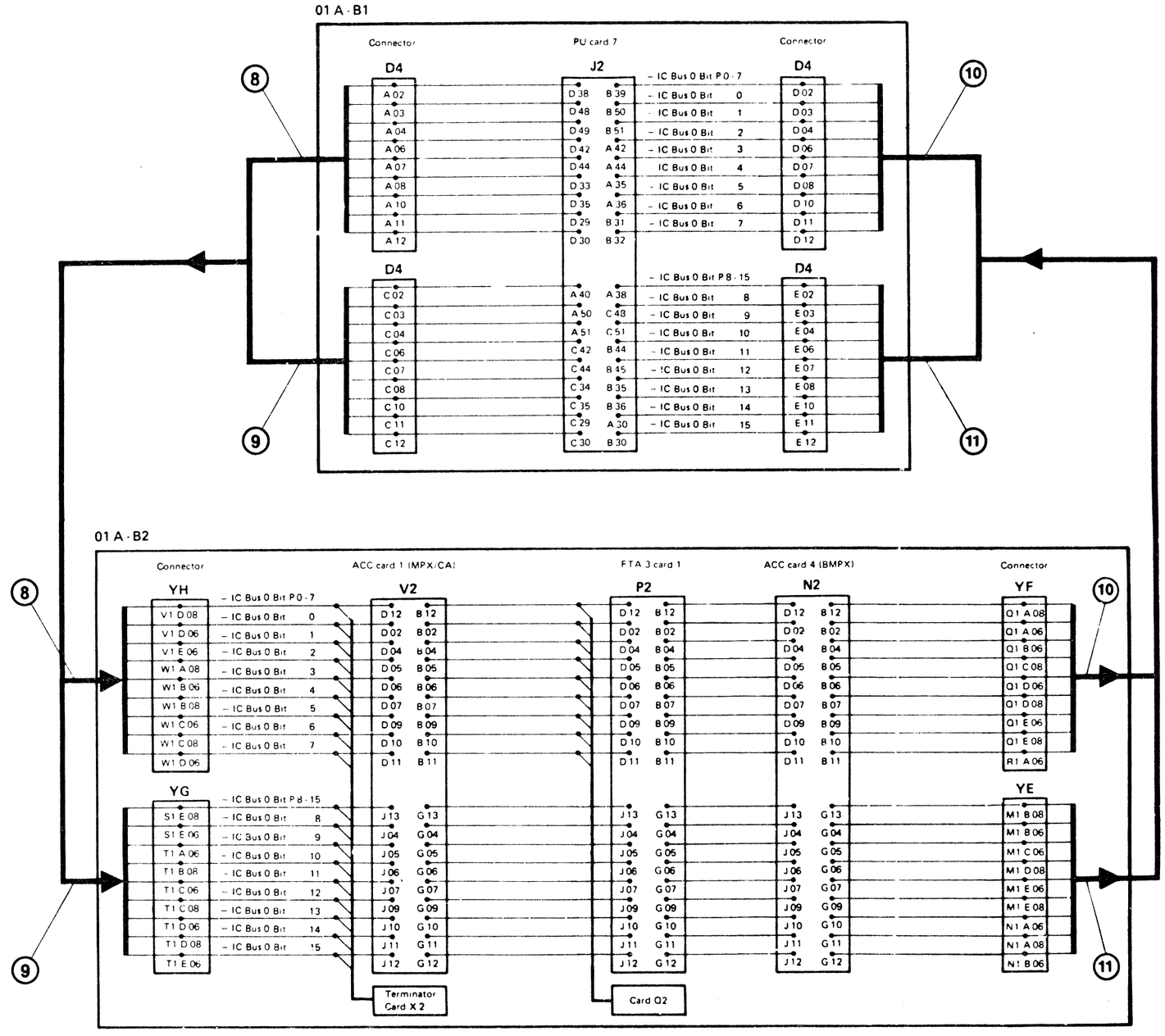

IC BUS 0 (continued)

IC Bus 0 Ring Lines (continued)

This page shows the IC bus 0 'bus ring lines' for version 2

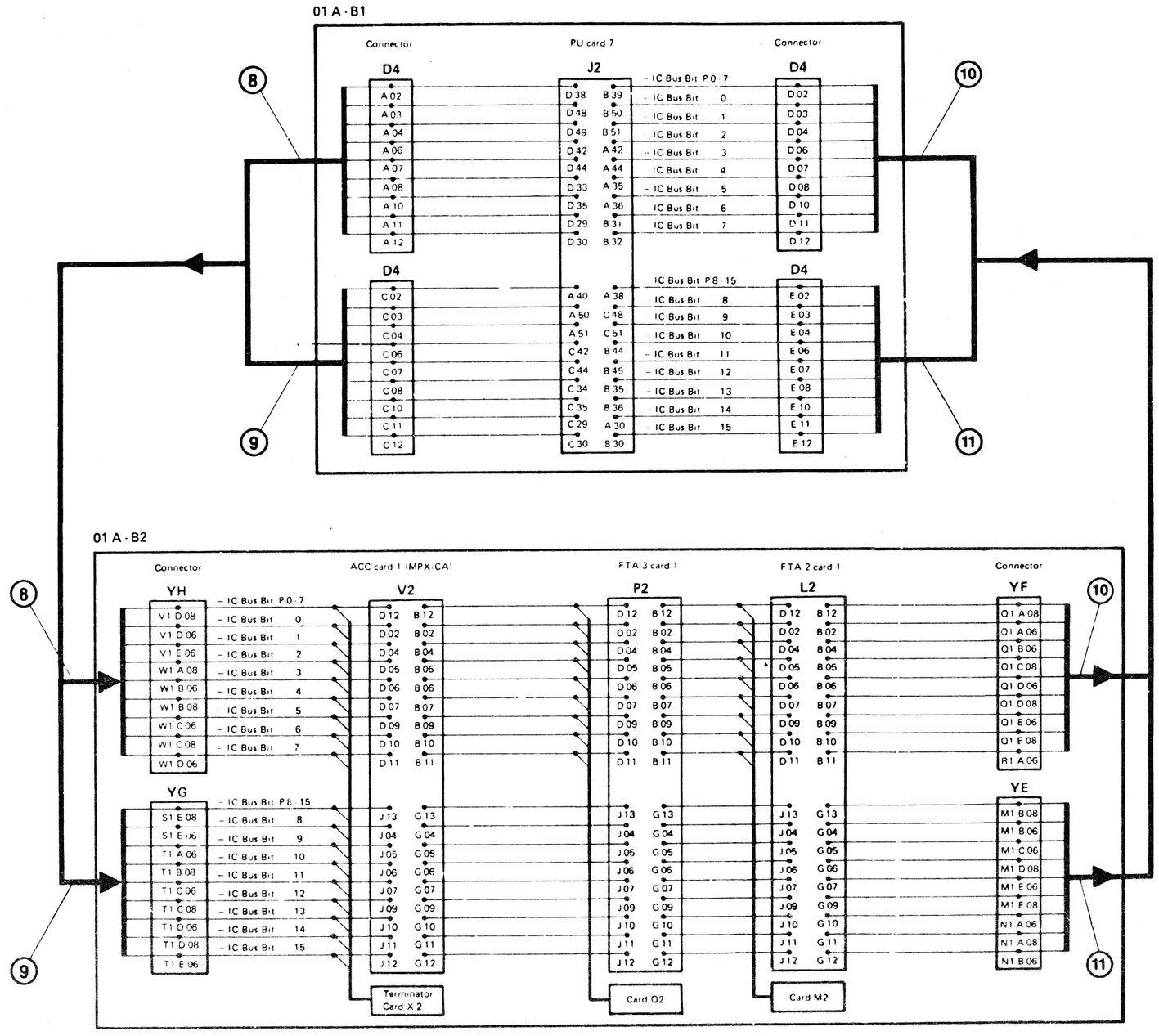

IC Bus 0 Ring Lines (continued)

This page shows the IC bus 0 'bus ring lines' for version 3

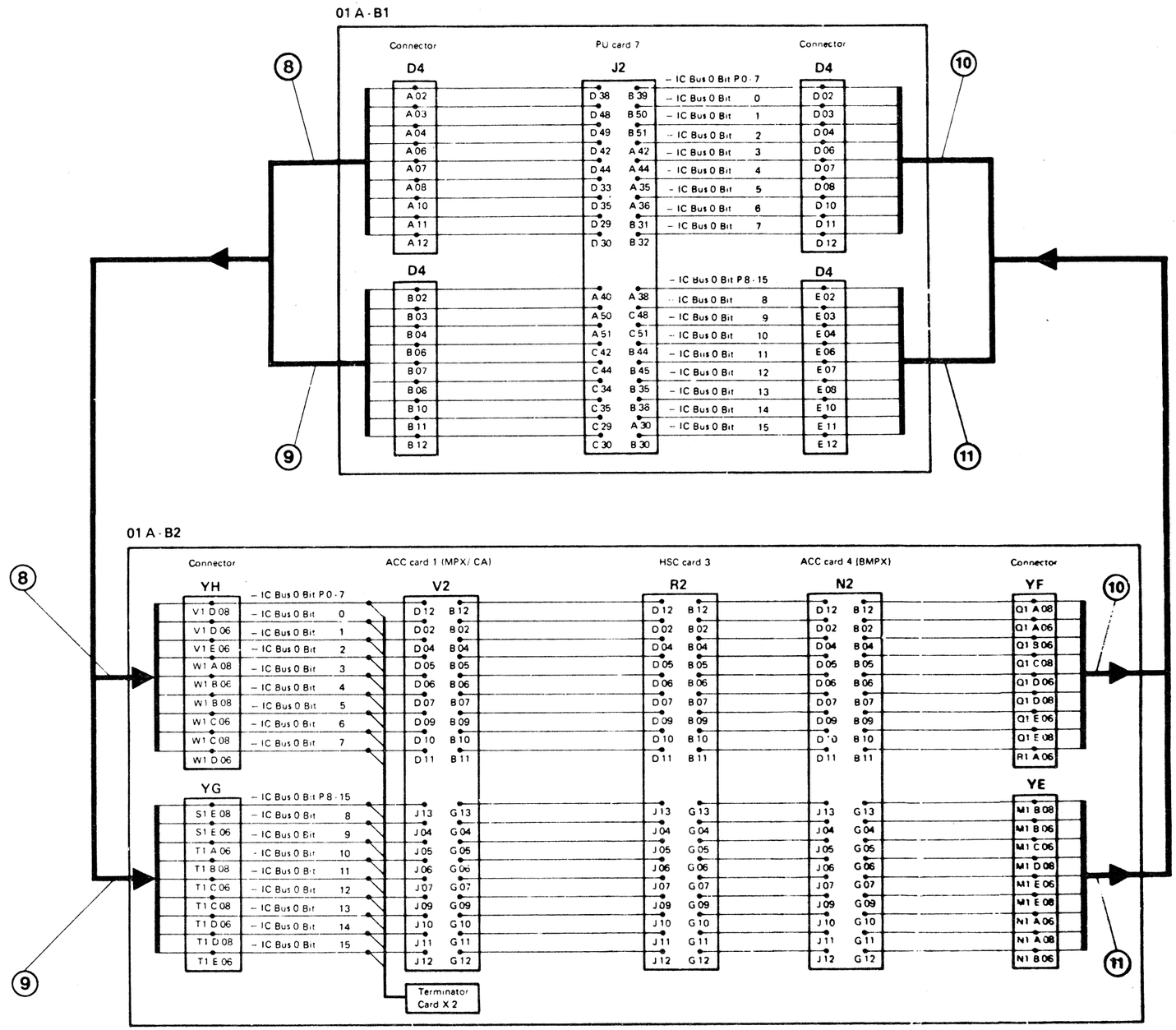

IC Bus 0 (continued)

IC Bus 0 Ring Lines (continued)

This page shows on the right side all three possible base configurations of the IC bus 0.

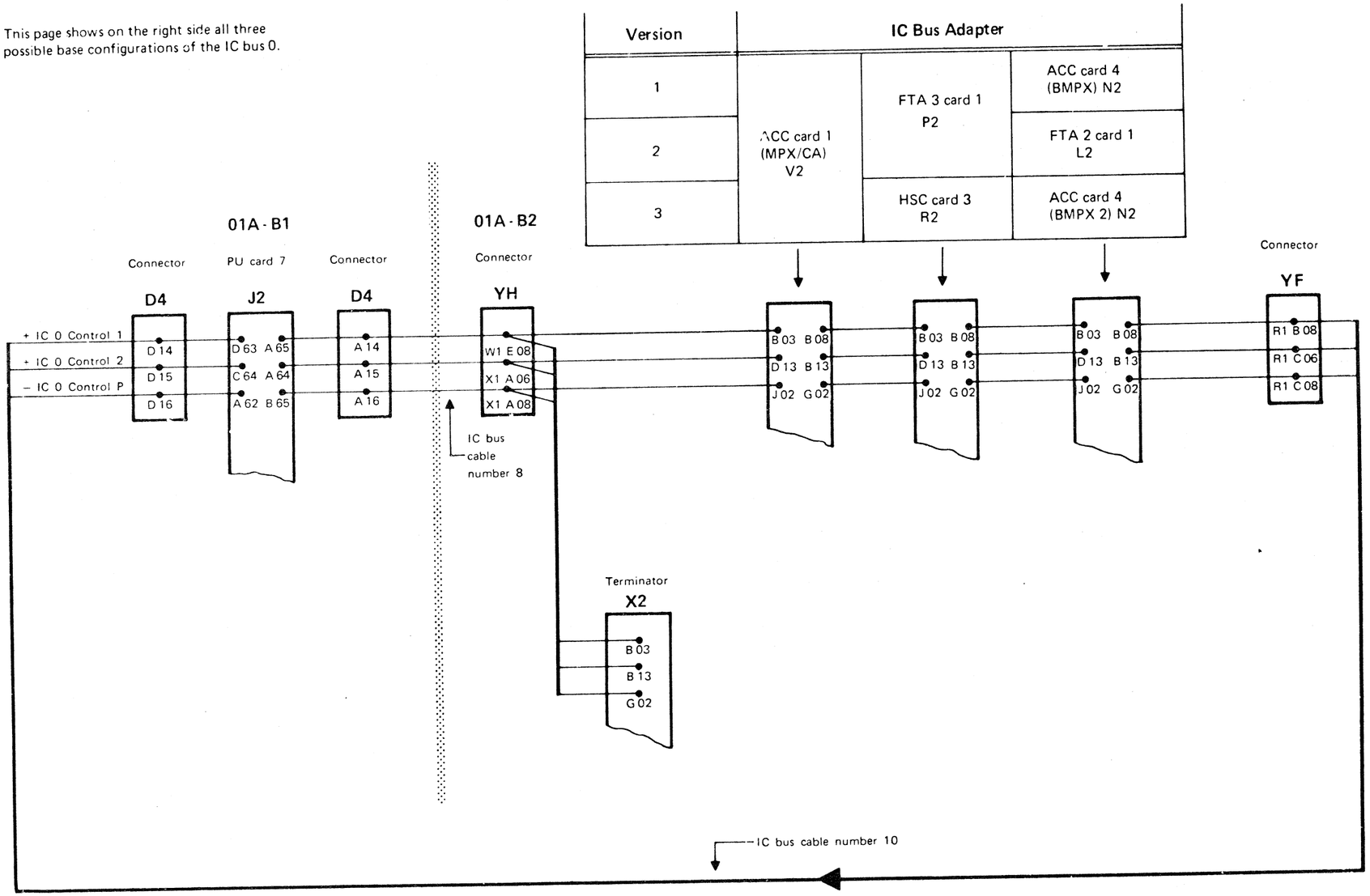

IC Bus 0 Star Lines

This page shows the star lines for version 1.

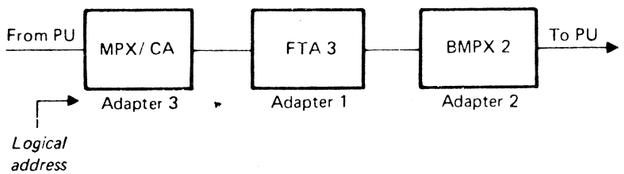

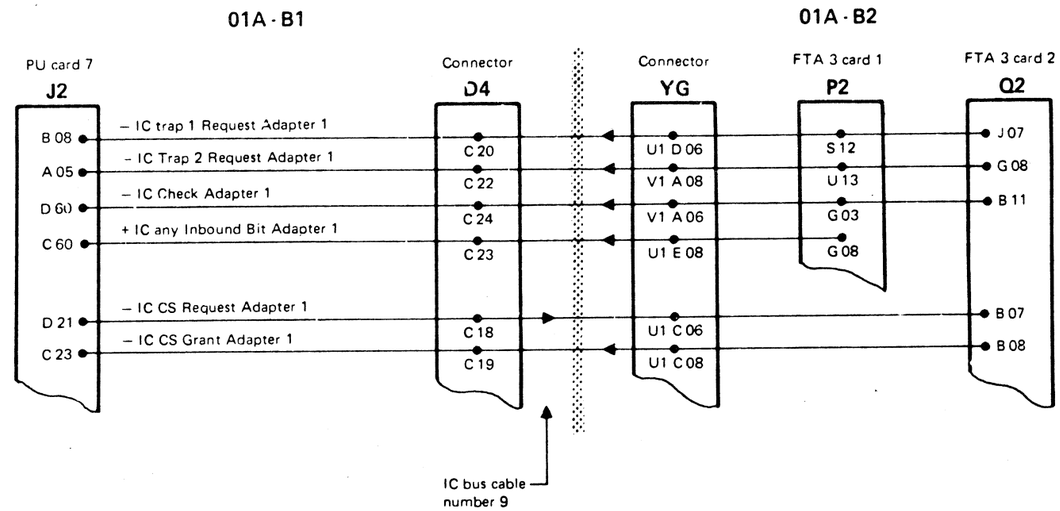

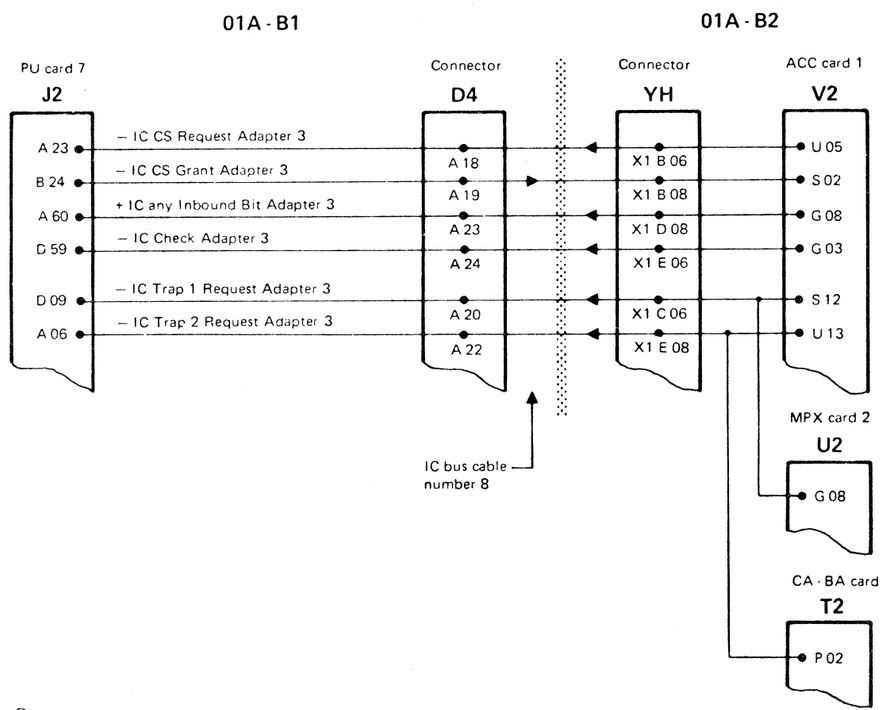

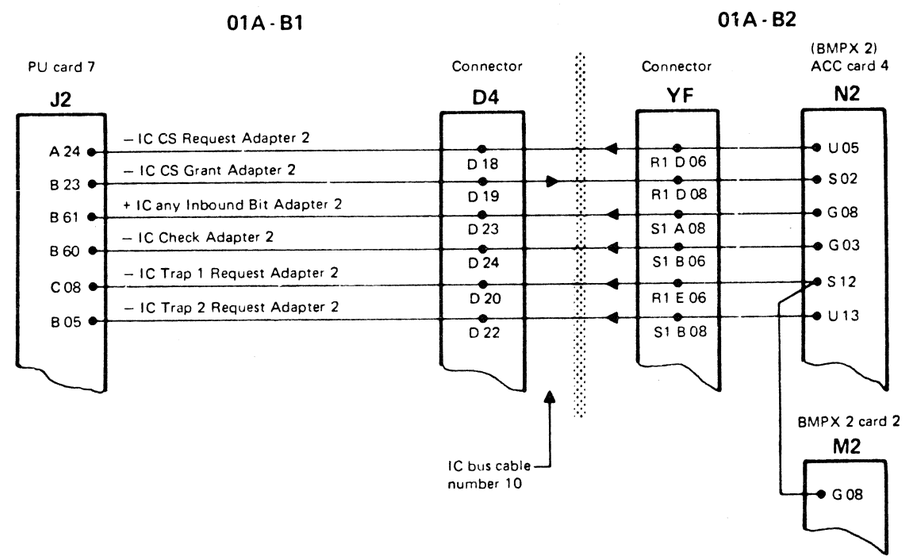

IC Bus 0 (continued)

IC Bus 0 Star Lines (continued)

This page shows the star lines for version 2.

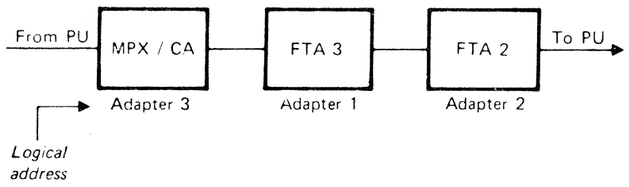

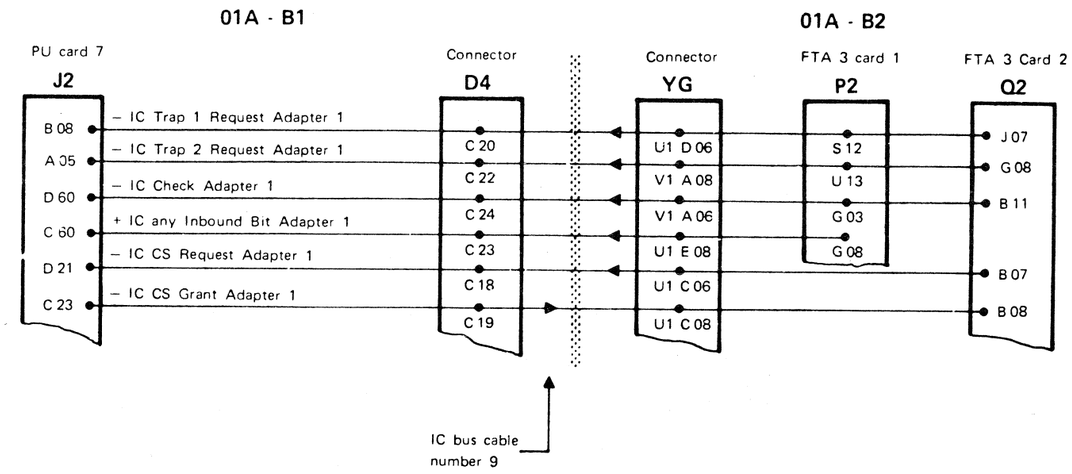

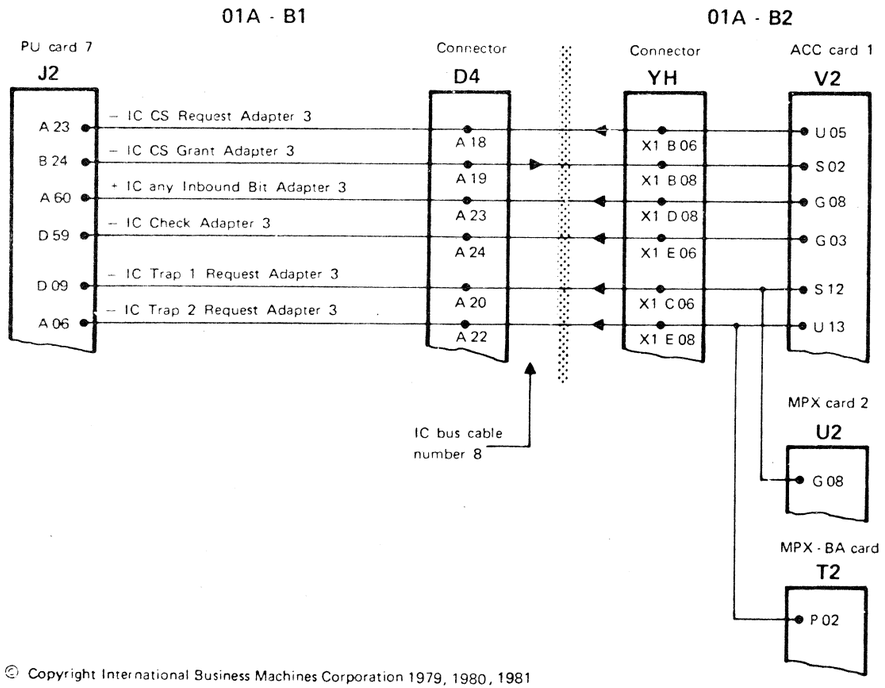

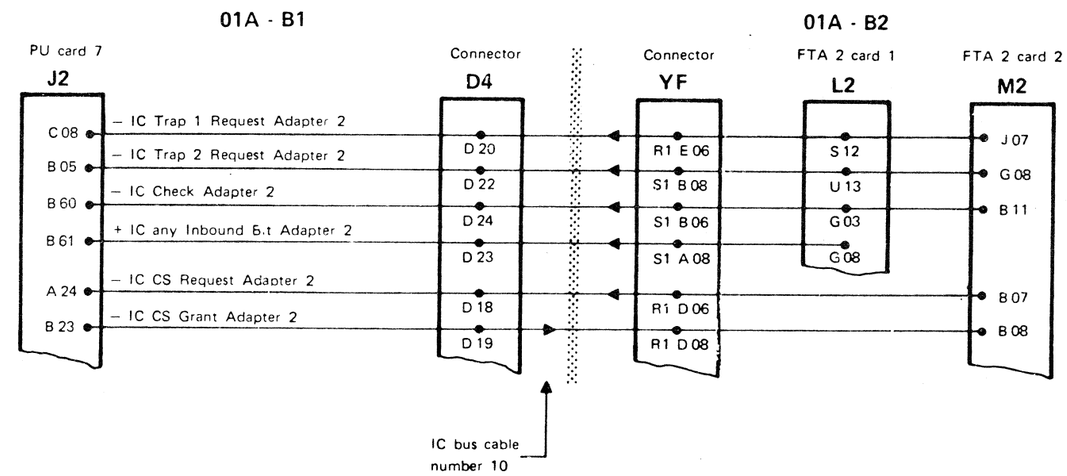

IC Bus 0 Star Lines (continued)

This page shows the star lines for version 3.

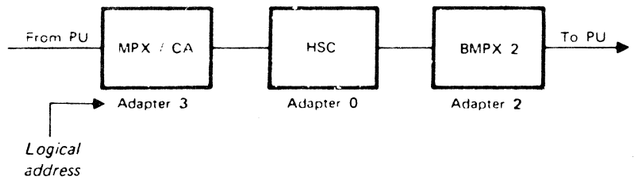

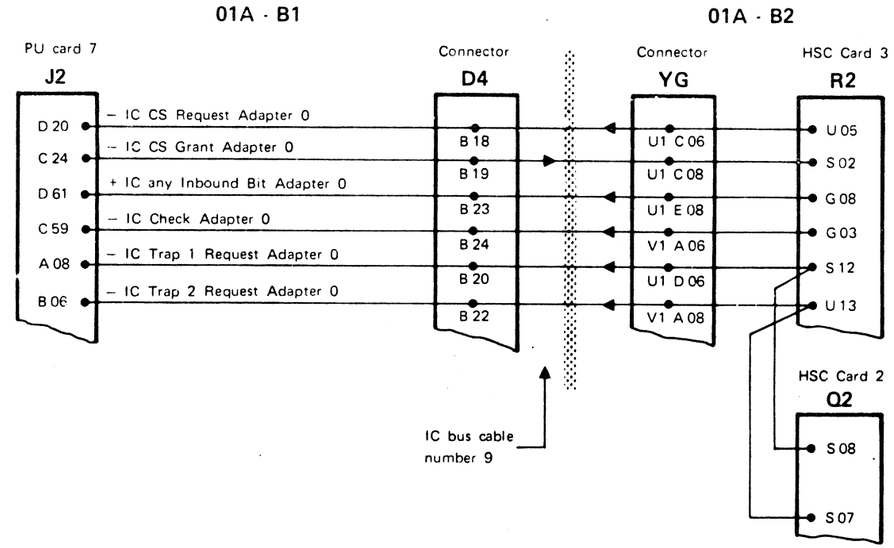

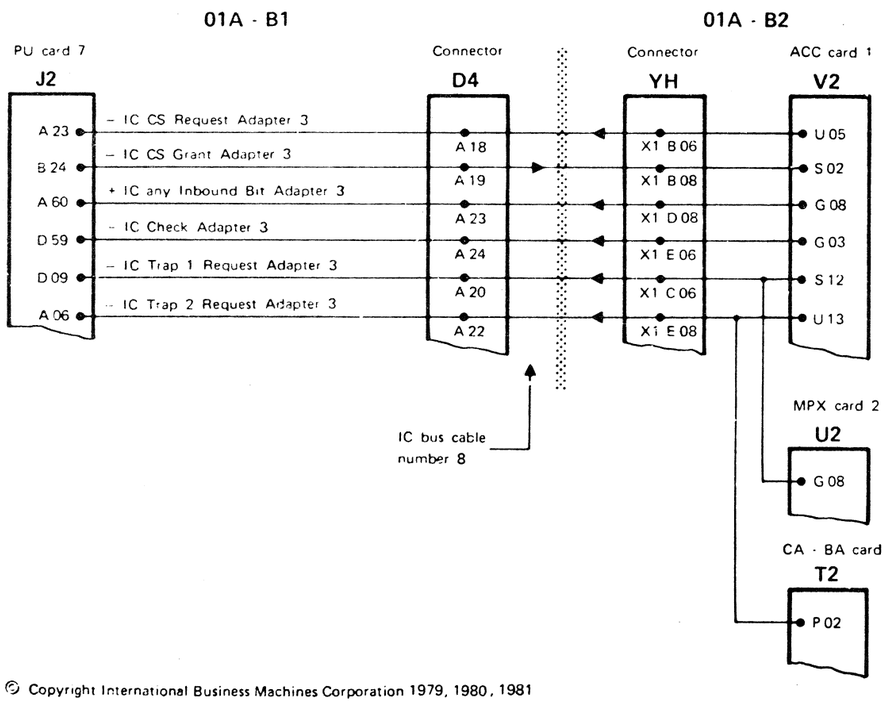

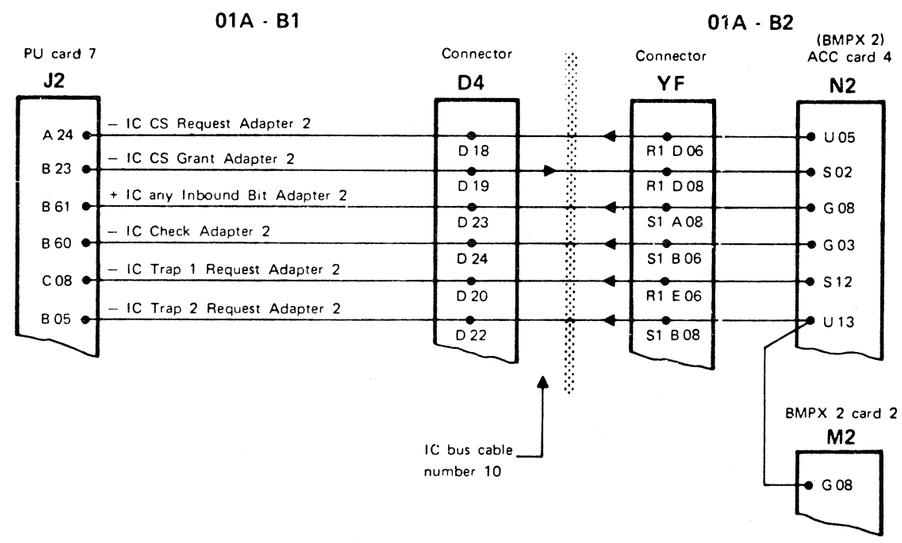

IC Bus 0 (continued)

IC Bus 0 Stub Lines

This page shows on the right side all three possible base configurations (versions) of the IC bus 0.

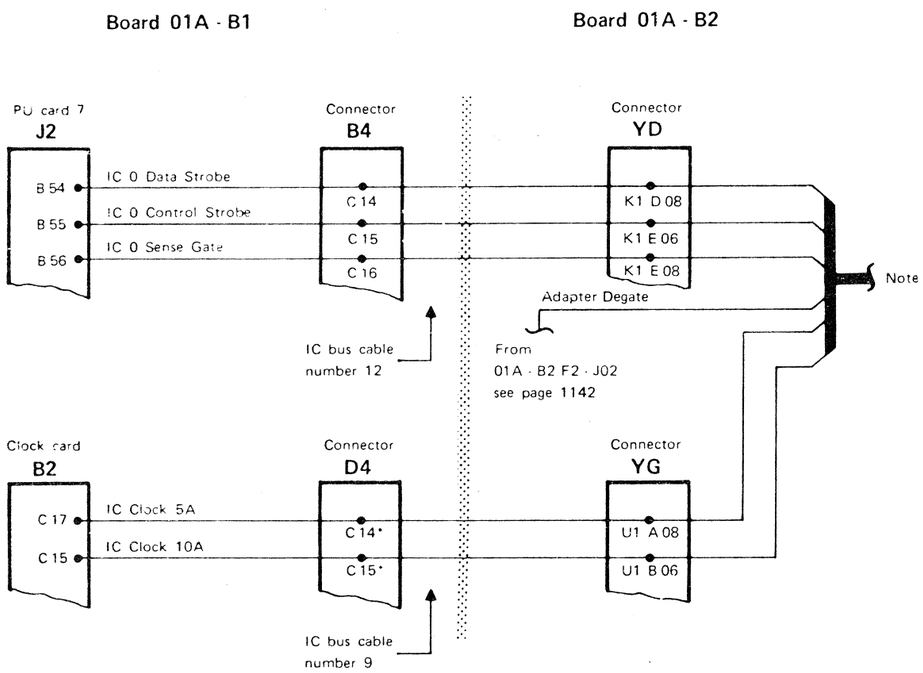

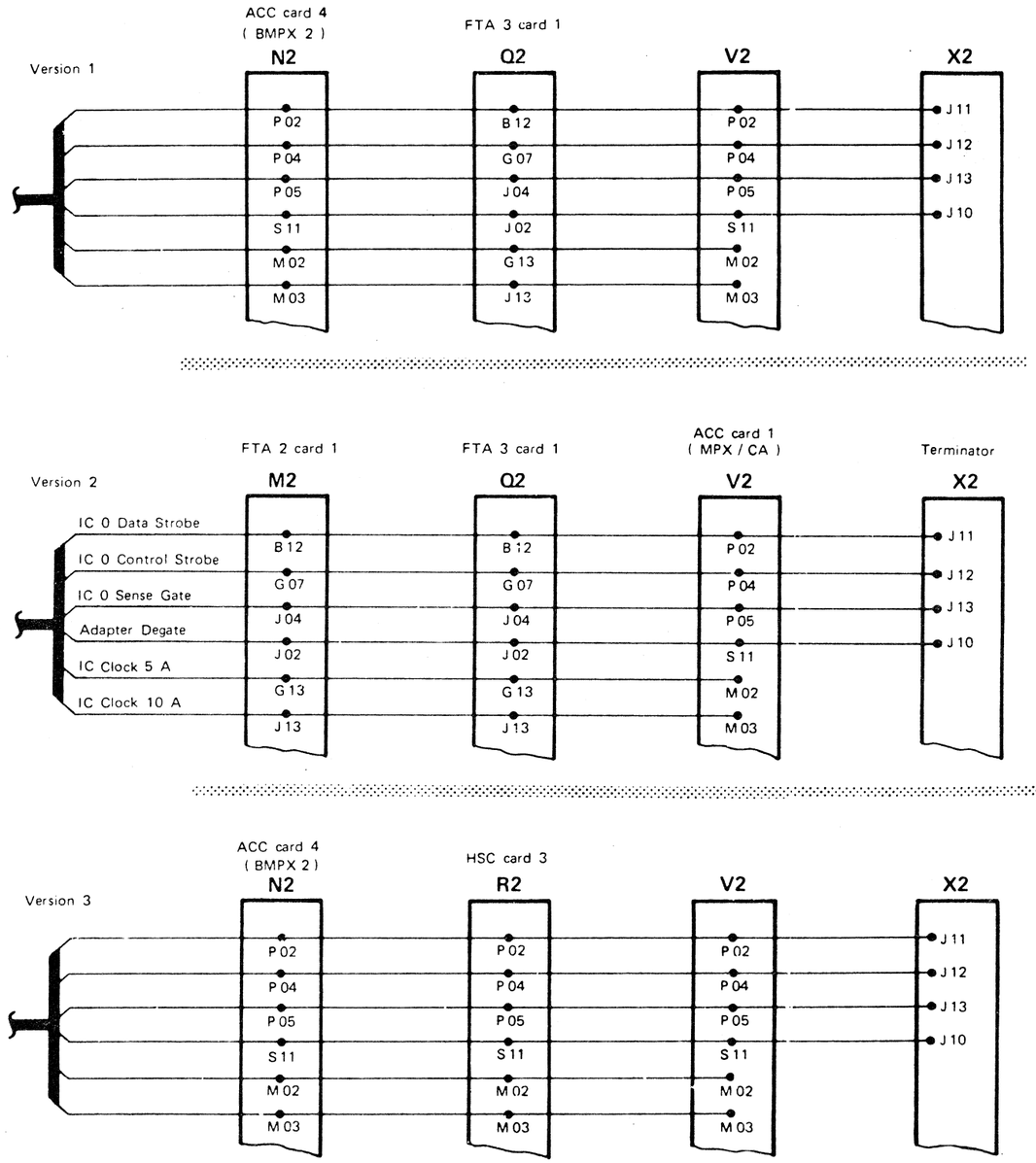

IC Bus 1

Signal Names of IC Bus 1 Cables

Cable Number 4

From 01A-A2*	To 01A-B1	Signal Name
S1E13	B4D02	- IC Bus 1 Bit, P, 8-15
S1E11	B4D03	- IC Bus 1 Bit 8
T1A11	B4D04	- IC Bus 1 Bit 9
T1B13	B4D06	- IC Bus 1 Bit 10
T1C11	B4D07	- IC Bus 1 Bit 11
T1C13	B4D08	- IC Bus 1 Bit 12
T1D11	B4D10	- IC Bus 1 Bit 13
T1D13	B4D11	- IC Bus 1 Bit 14
T1E11	B4D12	- IC Bus 1 Bit 15
U1A13	B4D14	+ IC 1 Control 1
U1B11	B4D15	+ IC 1 Control 2
U1B13	B4D16	- IC 1 Control Parity
U1C11	B4D18	- IC CS Request Adapter 7
U1C13	B4D19	- IC CS Grant Adapter 7
U1D11	B4D20	- IC Trap 1 Request 7
V1A13	B4D22	- IC Trap 2 Request 7
U1E13	B4D23	+ IC Any Inbound Bit Adapter 7
V1A11	B4D24	- IC Check Adapter 7

* Connector YQ

Cable Number 5

From 01A-A2*	To 01A-B1	Signal Name
V1E11	B4E04	- IC 1 Data Strobe
W1A13	B4E06	- IC 1 Control Strobe
W1B11	B4E07	- IC 1 Sense Gate
W1B13	B4E08	- IC Adapter Degate
W1E13	B4E14	- IC Bus 1 Bit P 0 - 7
X1A11	B4E15	- IC Bus 1 Bit 0
X1A13	B4E16	- IC Bus 1 Bit 1
X1B11	B4E18	- IC Bus 1 Bit 2
X1B13	B4E19	- IC Bus 1 Bit 3
X1C11	B4E20	- IC Bus 1 Bit 4
X1E13	B4E22	- IC Bus 1 Bit 5
X1D13	B4E23	- IC Bus 1 Bit 6
X1E11	B4E24	- IC Bus 1 Bit 7

* Connector YR

Cable Number 6

From 01A-B2	To 01A-A2	Signal Name
A3D13	X3D13	- IC Bus Bit P, (8-15)
A3D03	X3D03	- IC Bus Bit 8
A3D05	X3D05	- IC Bus Bit 9
A3D06	X3D06	- IC Bus Bit 10
A3D07	X3D07	- IC Bus Bit 11
A3D09	X3D09	- IC Bus Bit 12
A3D10	X3D10	- IC Bus Bit 13
A3D11	X3D11	- IC Bus Bit 14
A3B10	X3B10	- IC Bus Bit 15
A3B12	X3B12	- IC Clock 5B
A3B13	X3B13	- IC Clock 10B
A3B06	X3B06	- IC Sense Gate
A3B05	X3B05	- IC Control Strobe
A3B09	X3B09	- IC Data Strobe
A3B08	X3B08	- IC Adapter Degate

Cable Number 7

From 01A-B2	To 01A-A2	Signal Name
A2B12	X2B12	- IC Bus Bit P, (0-7)
A2D02	X2D02	- IC Bus Bit 0
A2B04	X2B04	- IC Bus Bit 1
A2D05	X2D05	- IC Bus Bit 2
A2D06	X2D06	- IC Bus Bit 3
A2D07	X2D07	- IC Bus Bit 4
A2D09	X2D09	- IC Bus Bit 5
A2D10	X2D10	- IC Bus Bit 6
A2D11	X2D11	- IC Bus Bit 7
A2B08	X2B08	- IC Control Bit 1
A2D13	X2D13	- IC Control Bit 2
A2B13	X2B13	- IC Control P

Cable Number 11

From 01A-B1	To 01A-B2*	Signal Name
D4E14	N1C08	- IC Clock 5B
D4E15	N1D06	- IC Clock 10B

* Connector YE

Cable Number 12

From 01A-B1	To 01A-B2*	Signal Name
B4C02	J1C08	- IC Bus 1 Bit P, 0-7
B4C03	J1C06	- IC Bus 1 Bit 0
B4C04	J1D06	- IC Bus 1 Bit 1
B4C06	J1E08	- IC Bus 1 Bit 2
B4C07	K1A06	- IC Bus 1 Bit 3
B4C08	K1A08	- IC Bus 1 Bit 4
B4C10	K1B06	- IC Bus 1 Bit 5
B4C11	K1B08	- IC Bus 1 Bit 6
B4C12	K1C06	- IC Bus 1 Bit 7
B4C18	L1A06	- IC CS Request Adapter 4
B4C19	L1A08	- IC CS Grant Adapter 4
B4C20	L1B06	- IC Trap 1 Request Adapter 4
B4C22	L1D08	- IC Trap 2 Request Adapter 4
B4C23	L1C08	+ IC Any Inbound Bit Adapter 4
B4C24	L1D06	- IC Check Adapter 4

* Connector YD

Cable Number 13

From 01A-B1	To 01A-B2*	Signal Name
B4B02	F1D08	- IC Bus 1 Bit P, 8-15
B4B03	F1D06	- IC Bus 1 Bit 8
B4B04	F1E06	- IC Bus 1 Bit 9
B4B06	G1A08	- IC Bus 1 Bit 10
B4B07	G1B06	- IC Bus 1 Bit 11
B4B08	G1B08	- IC Bus 1 Bit 12
B4B10	G1C06	- IC Bus 1 Bit 13
B4B11	G1C08	- IC Bus 1 Bit 14
B4B12	G1D08	- IC Bus 1 Bit 15
B4B14	G1E08	+ IC 1 Control 1
B4B15	H1A06	+ IC 1 Control 2
B4B16	H1A08	- IC 1 Control Parity
B4B18	H1B06	- IC CS Request Adapter 5
B4B19	H1B08	- IC CS Grant Adapter 5
B4B20	H1C06	- IC Trap 1 Request Adapter 5
B4B22	H1E08	- IC Trap 2 Request Adapter 5
B4B23	H1D08	+ IC Any Inbound Bit Adapter 5
B4B24	H1E06	- IC Check Adapter 5

* Connector YC

IC Bus 1 (continued)

IC Bus 1 Ring Lines

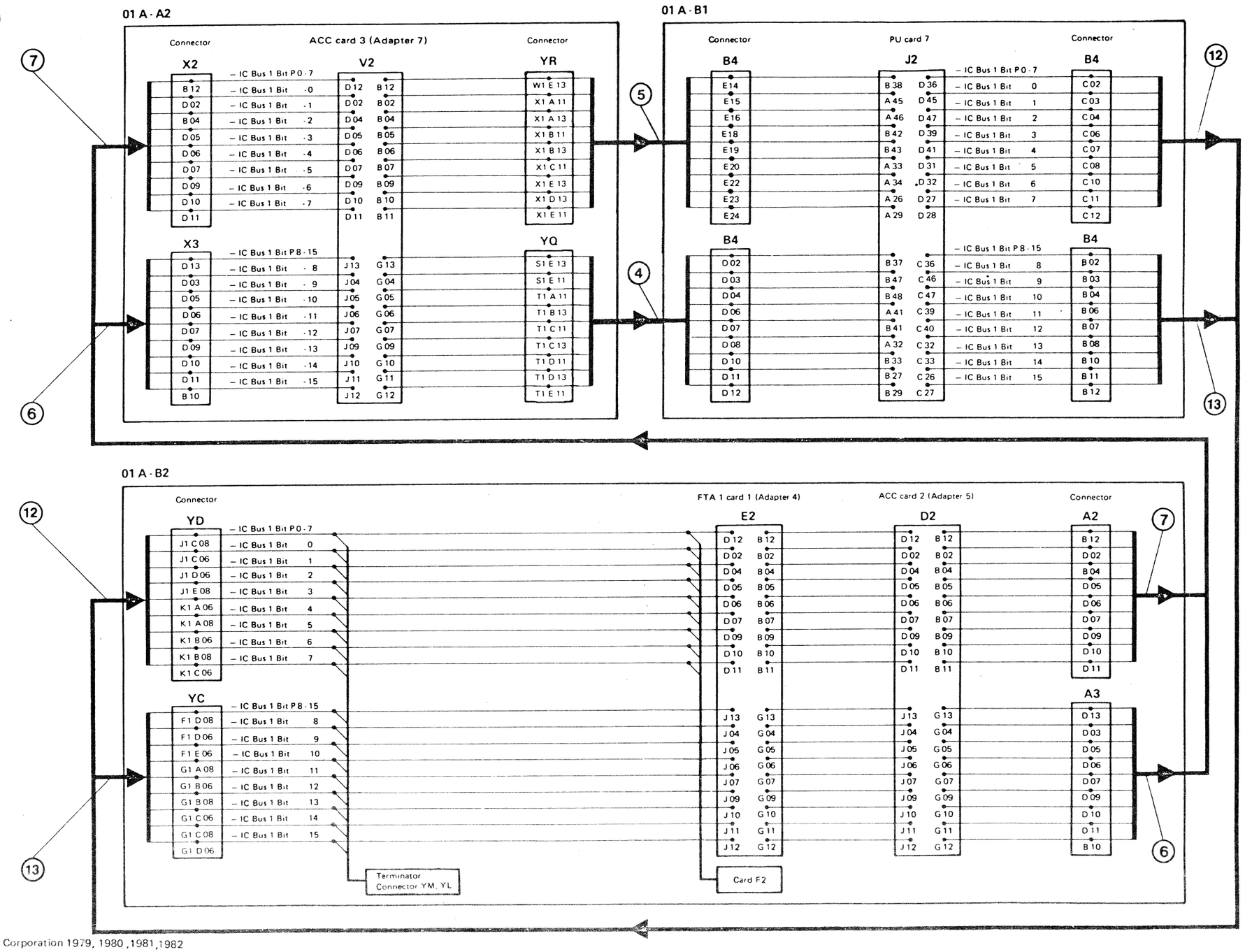

IC Bus 1 Ring Lines (continued)

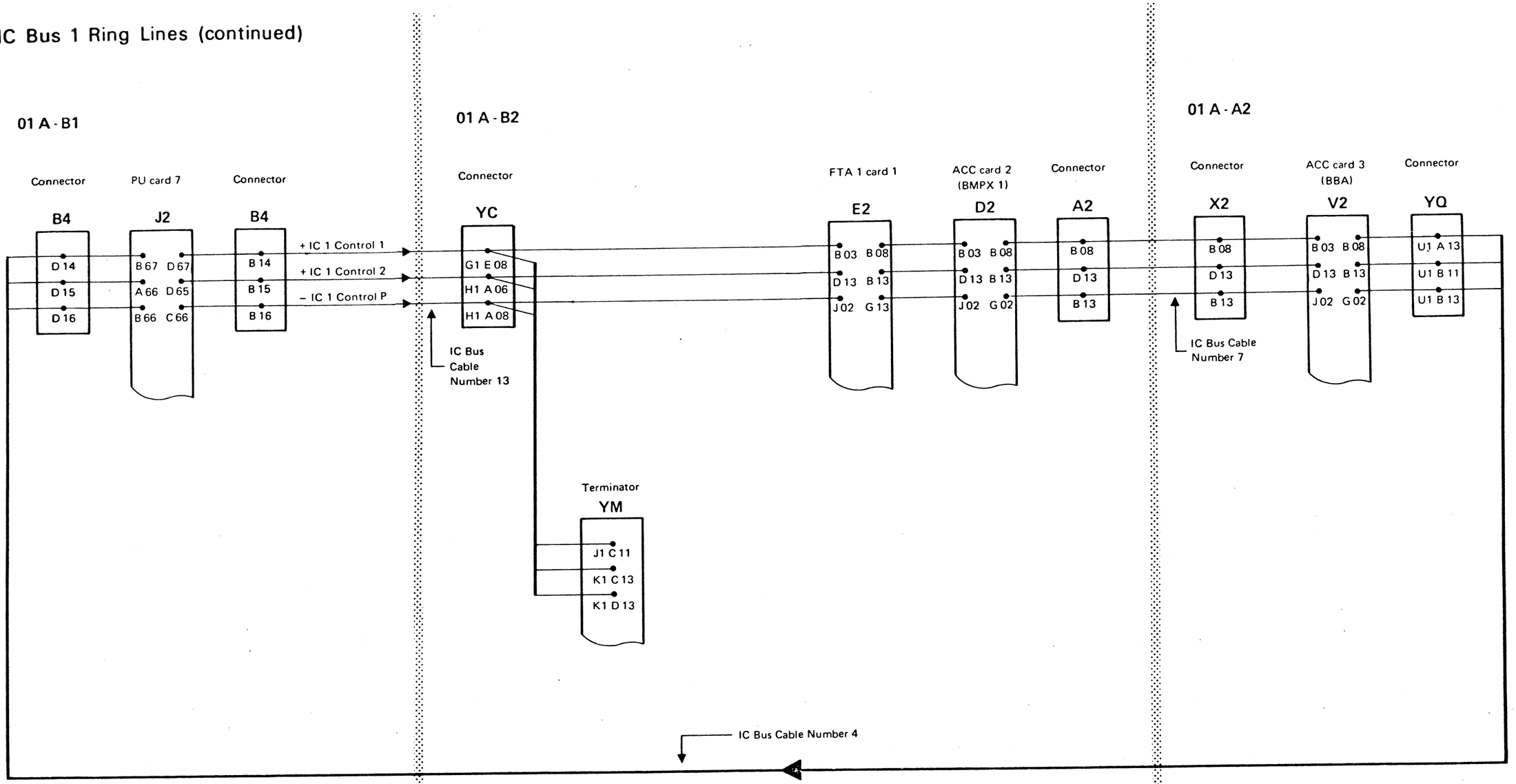

ADB1138

STM

IC Bus 1 (continued)

IC Bus 1 Star Lines

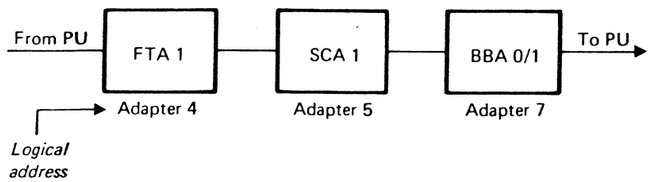

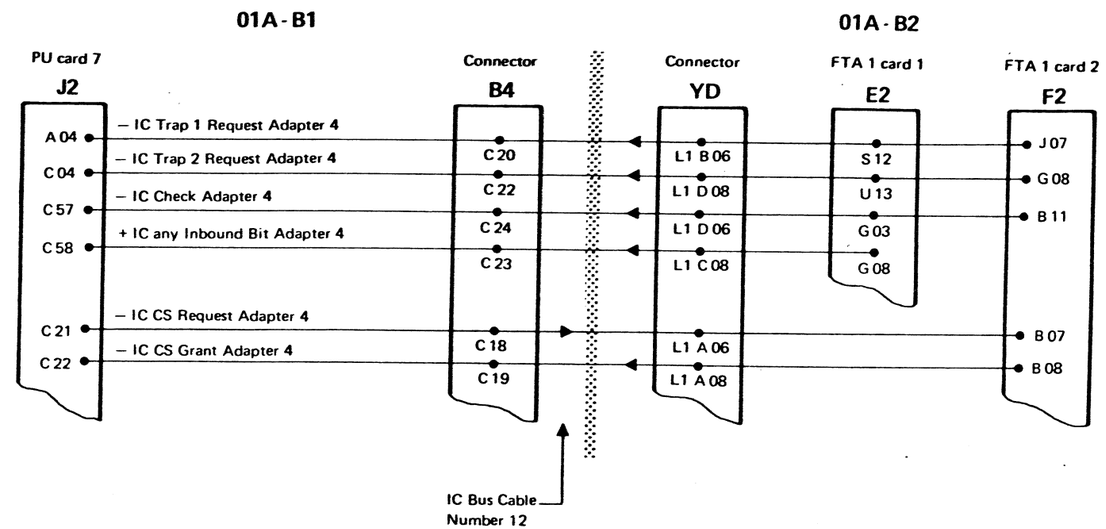

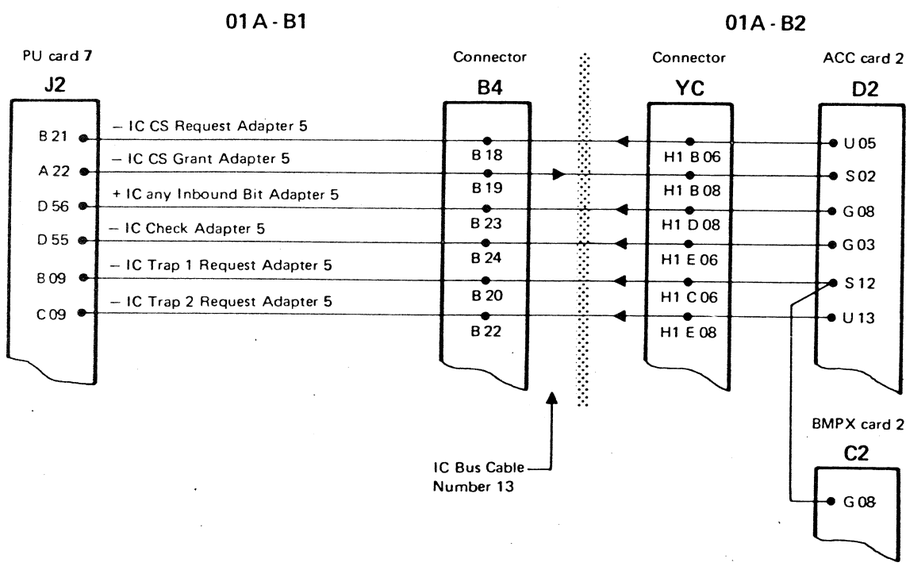

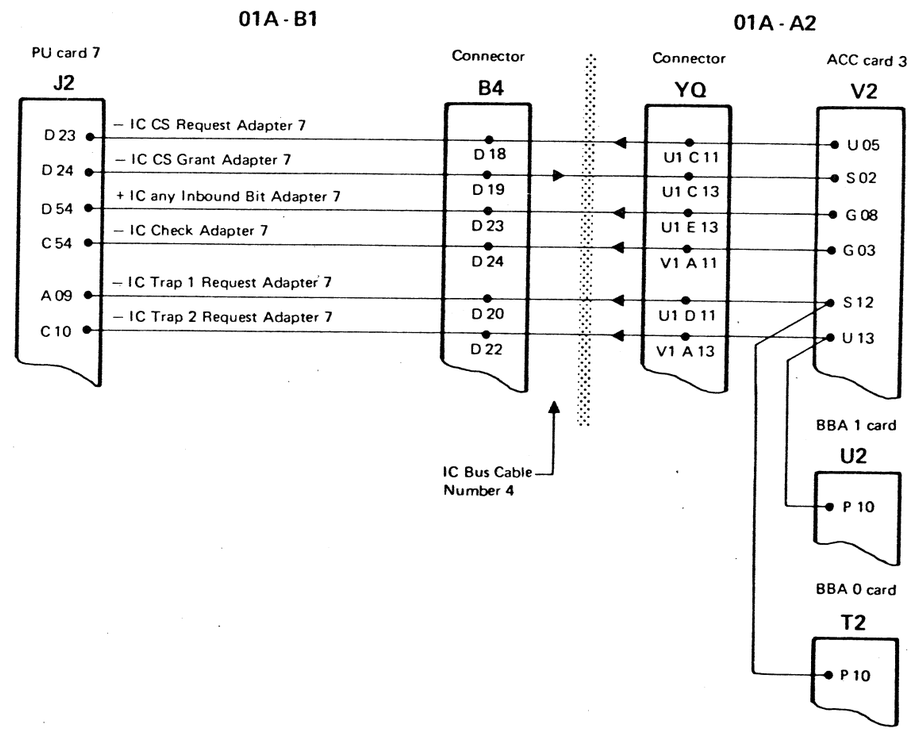

IC Bus 1 Stub Lines

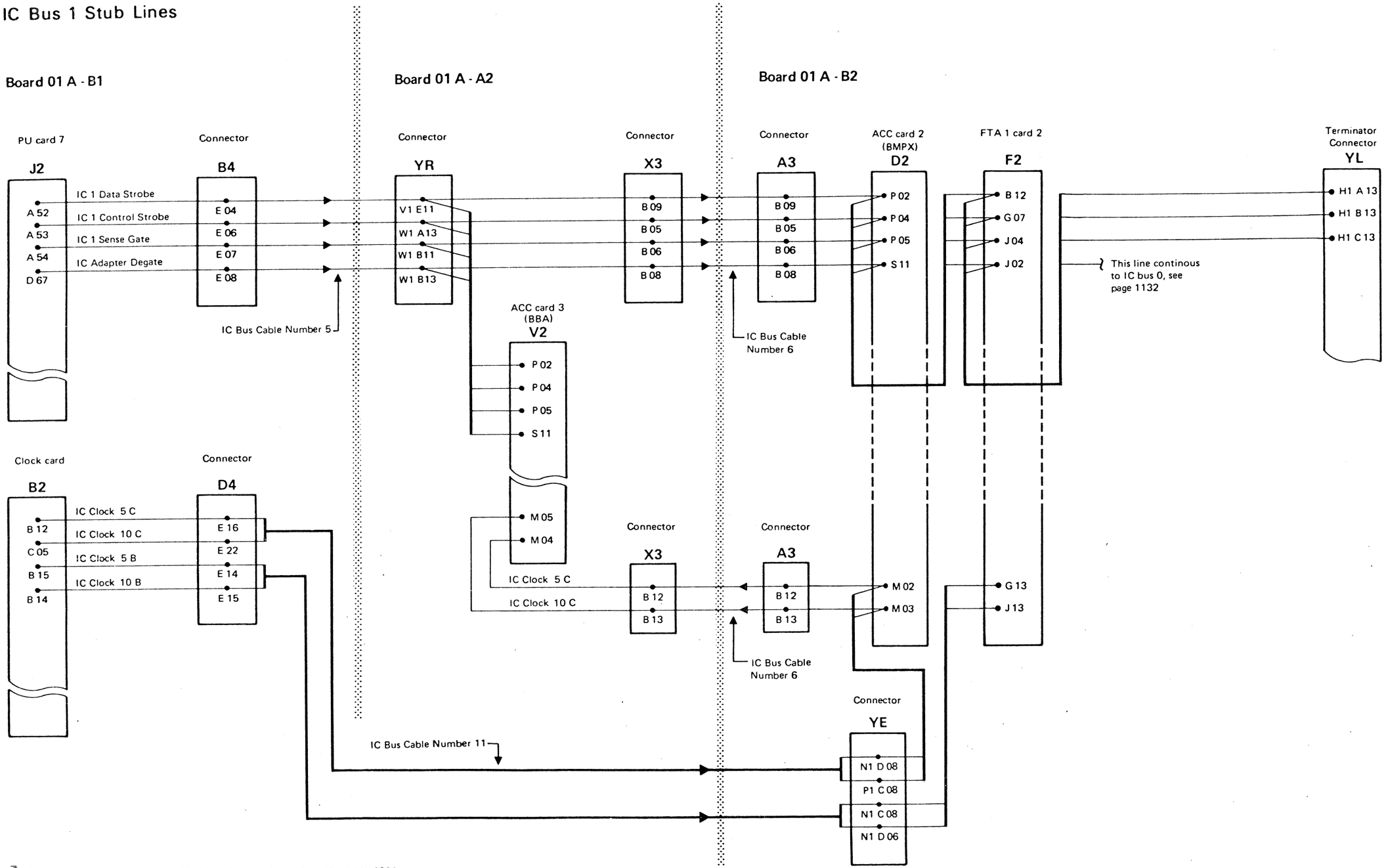

ADB1142

STM

This page has been intentionally left blank.

This page has been
intentionally left blank

Processor Bus for Support Subsystem

Bus Layout

The processor bus consists of 34 lines:
Bus byte 0, Bus byte 1,
and 16 control lines.

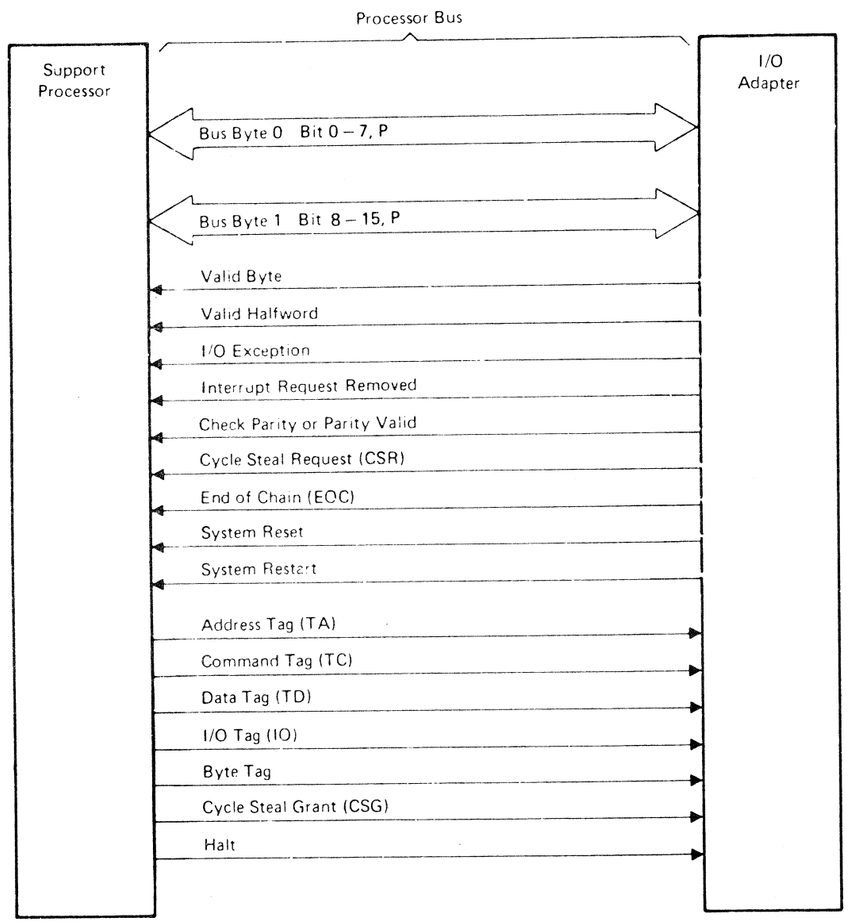

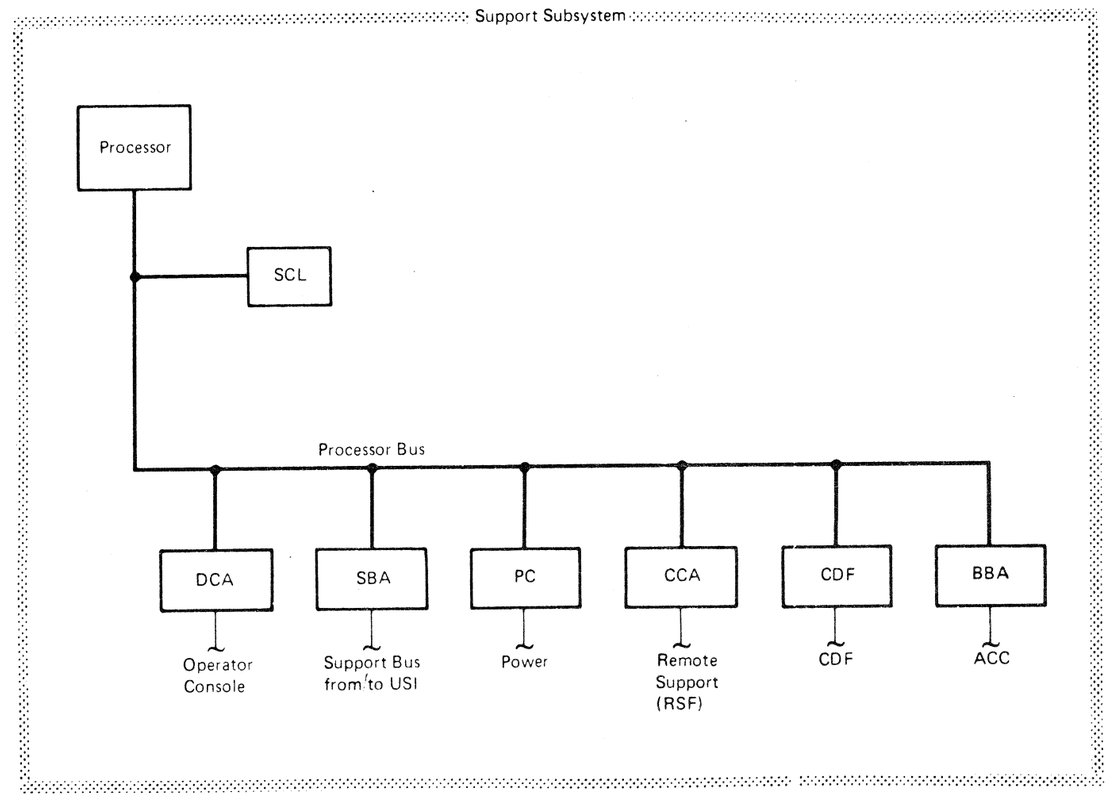

Pin Location Charts

Processor Bus (Bytes) \ Location of Card	Processor C2 E2	SCL Card 3 C2 C2	Connector C2 YJ	Connector A2 YM	PCI A2 E2	DCA Card 3 A2 K2	SBA A2 Q2	CDF Card 1 A2N2 A2 R2	BBA 0 A2 T2	RSF A2 W2
Byte 0 Bit 0	M02	D13	A1 B13	J1 D13	B08	G02	J09	G04	S06	G02
Byte 0 Bit 1	P02	B12	A1 C13	J1 E13	D11	J02	B07	D13	S12	J02
Byte 0 Bit 2	M03	B13	A1 D13	K1 A13	D10	D10	B13	J02	U10	D10
Byte 0 Bit 3	P04	D10	B1 A13	K1 C13	B09	G08	B08	G02	U09	G08
Byte 0 Bit 4	M04	D09	B1 B13	K1 D13	D06	J04	B09	J06	S10	J04
Byte 0 Bit 5	M05	B10	B1 C13	K1 E13	B03	D09	G02	G07	S05	D09
Byte 0 Bit 6	P05	D06	B1 D13	L1 A13	B10	B09	B10	G08	S07	B09
Byte 0 Bit 7	P06	D07	C1 A13	L1 C13	D04	D06	G03	G03	U12	D06
Byte 0 Bit P	P07	B03	C1 B13	L1 D13	B06	B02	G04	B12	S08	B02
Byte 1 Bit 8	P09	U06*	A1 C11	J1 E11	J13	G09	J10	D12	U05	G09
Byte 1 Bit 9	M09	U04	A1 D11	K1 A11	J10	B07	J02 /G06	J04	S09	J06
Byte 1 Bit 10	M10	S04	A1 E11	K1 B11	G09	G07	G07	G09	U02	B07
Byte 1 Bit 11	P10	S03	D1 A11	K1 C11	G08	J07	J04	J07	U07	J07
Byte 1 Bit 12	P11	P09	B1 C11	K1 E11	G10	G10	J05	D10	U04	G10
Byte 1 Bit 13	P12	M09	B1 D11	L1 A11	G06	J10 /S08	J06	J09 / M08	U13	J10
Byte 1 Bit 14	P13	M08	B1 E11	L1 B11	J07	J11	J07	G05	S11	J11
Byte 1 Bit 15	M12	M07	C1 A11	L1 C11	G05	J12	G08	J05	U11	J12
Byte 1 Bit P	M13	S10	C1 B11	L1 D11	J06	G12	G09	B10	M13	G12

Processor Cont. Lines \ Location of Card		Processor C2F2	Processor C2E2	SCL 3 C2C2	SCL 4 C2B4	Connector C2YK	Connector A2YD	PCI A2 E2	DCA Card 3 A2K2	SBA A2Q2	CDF Card 1 A2N2 A2R2	BBA 0 A2T2	RSF A2W2
	Valid Byte	D04		D11		F1A11	L1D06	B12			U02	G07	G03
	Valid Halfword	B09		B02/S12		E1C11	L1A06		J09	B05			
Adapter	IRR	B03		D12		E1D11	L1B06	B04	D02	J12	P10	G12	D02
to	Parity Valid	B12		U12		E1E11	L1C06	J04	D07	G05	U11	M04	D07
SP	CSR	B04				C1E11	J1C06		S02		M05	B09	
	EOC	D09				D1C11	K1A06		M05		U13	P05	
	PIO Reset			G09	D10	E1A13	K1D08		J06	C09	S03	D04	J05
	Restart	S08			J11								
	TA	D05		S13		E1C13	L1A08	G04	D05	D12	U06	G08	D05
	TC	B10		B04		E1E13	L1C08	G02			S05	G05	B08
	TD	D11		G08		F1A13	L1D08	D13	B05	D13	U05	M11	B05
SP	I/O Tag	G08	U09	U13		E1B13	K1E08	B13	B04	D04	S09	J09	B04
to	Halt	B07		M13		D1E13	K1C08	J02	G04	P11	P02	P07	G04
Adapter	CSG	D10		D04	G04	D1B11	J1E06				U10		
	Byte Tag	B08				D1D11							
	CSG Pass DCA								B10		S10	J10	
	OSC Out	U02		S05		D1E11	K1C06			D11			

Note: Not all control lines of the Processor bus are used for each Adapter.

The following picture shows for example one bit of bus 0. All the other bits and control lines use the same way.

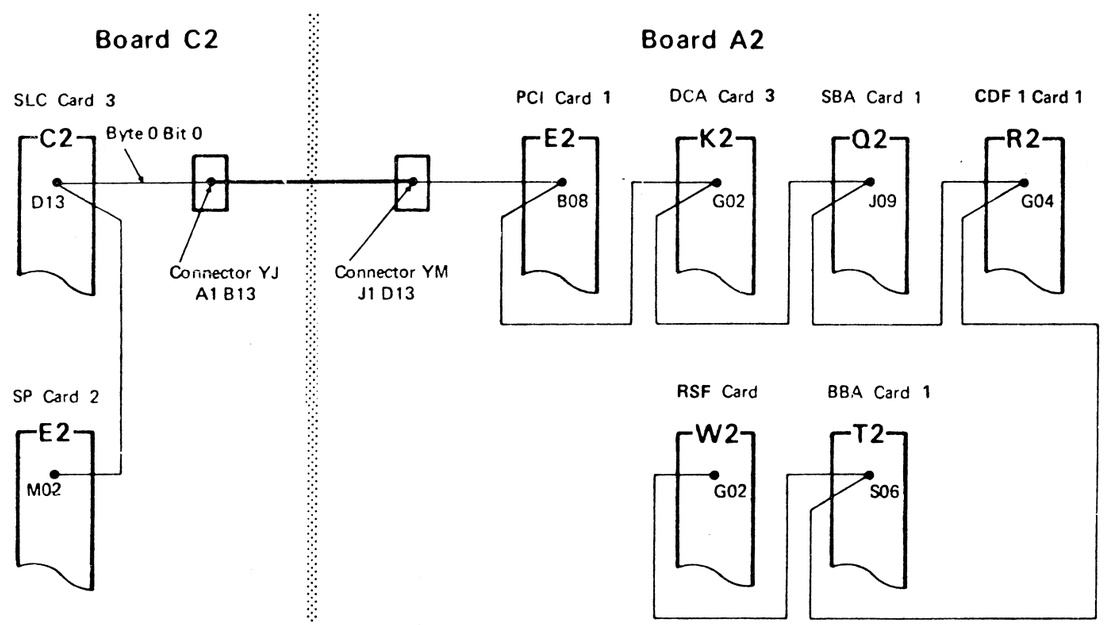

Processor Bus for I/O Subsystem

Bus Layout

The processor bus consists of 34 lines:
Bus byte 0, Bus byte 1,
and 16 control lines.

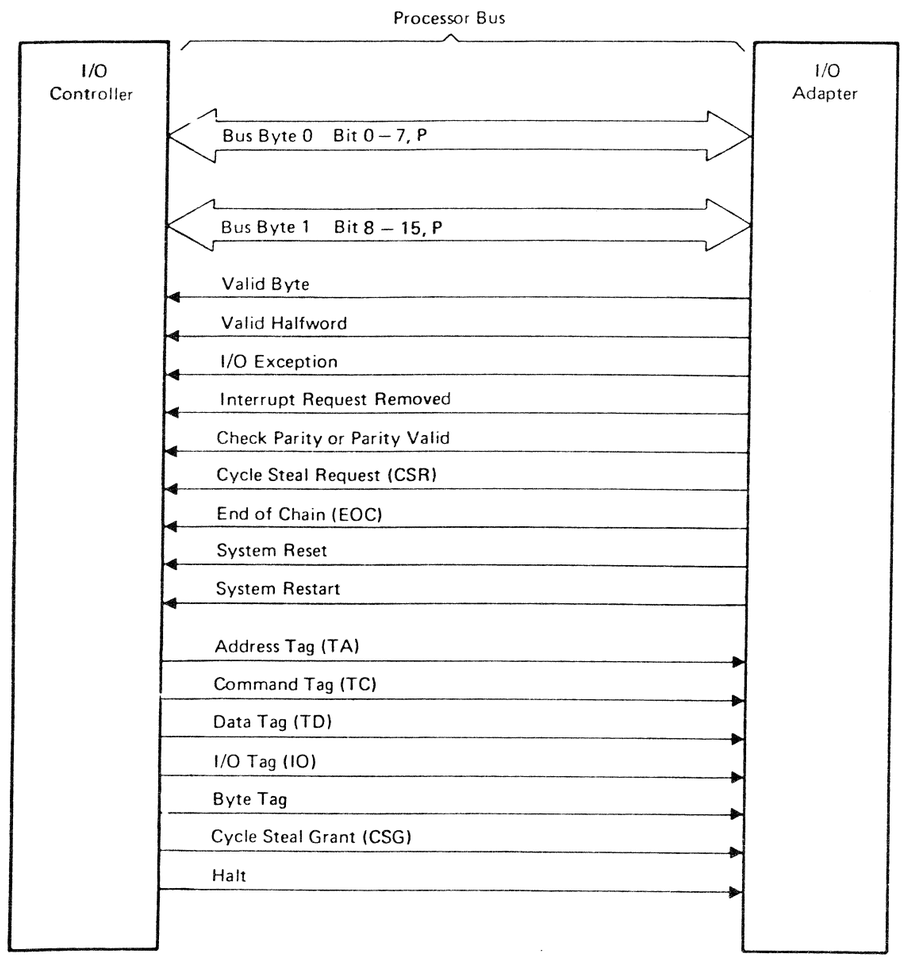

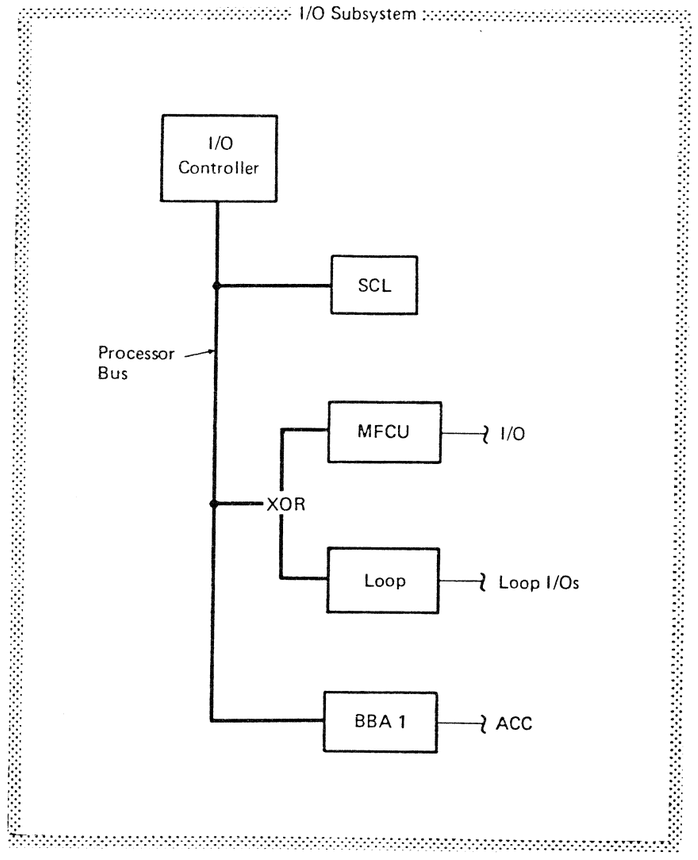

 MD.

Pin Location Charts

Processor Bus (Bytes) \ Location of Card	BBA 1 A2 U2	Connector A2 YG	Connector A1 ZG	MFCU A1 R2	SCL Card 1 A1 B2	IOC Card 4 A1 D2	LOOP * HPCA card J2,L2,N2,Q2
Byte 0 Bit 0	S06	T1 A08	T6 A04	P10	D13	M02	G02
Byte 0 Bit 1	S12	T1 B08	T6 B04	U05	B12	P02	J02
Byte 0 Bit 2	U10	T1 C08	T6 C04	M13	B13	M03	D10
Byte 0 Bit 3	U09	T1 E08	T6 E04	P12	D10	P04	G08
Byte 0 Bit 4	S10	U1 A08	U6 A04	P13	D09	M04	J04
Byte 0 Bit 5	S05	U1 B08	U6 B04	M08	B10	M05	D09
Byte 0 Bit 6	S07	U1 C08	U6 C04	M10	D06	P05	B09
Byte 0 Bit 7	U12	U1 E08	U6 E04	S03	D07	P06	D06
Byte 0 Bit P	S08	V1 A08	V6 A04	P11	B03	P07	B02
Byte 1 Bit 8	U05	T1 B06	T6 B02	M09	U06	P09	G09
Byte 1 Bit 9	S09	T1 C06	T6 C02	M12	U04	M09	J06
Byte 1 Bit 10	U02	T1 D06	T6 D02	M06	S04	M10	G07
Byte 1 Bit 11	U07	T1 E06	T6 E02	M11	S03	P10	J07
Byte 1 Bit 12	U04	U1 B06	U6 A02	P07	P09	P11	B07
Byte 1 Bit 13	U13	U1 C06	U6 B02	U04	M09	P12	J10
Byte 1 Bit 14	S11	U1 D06	U6 D02	U02	M08	P13	J11
Byte 1 Bit 15	U11	U1 E06	U6 E02	S04	M07	M12	J12
Byte 1 Bit P	M13	V1 A06	V6 A02	S02	S10	M13	G12

* Up to four HPCA may be installed

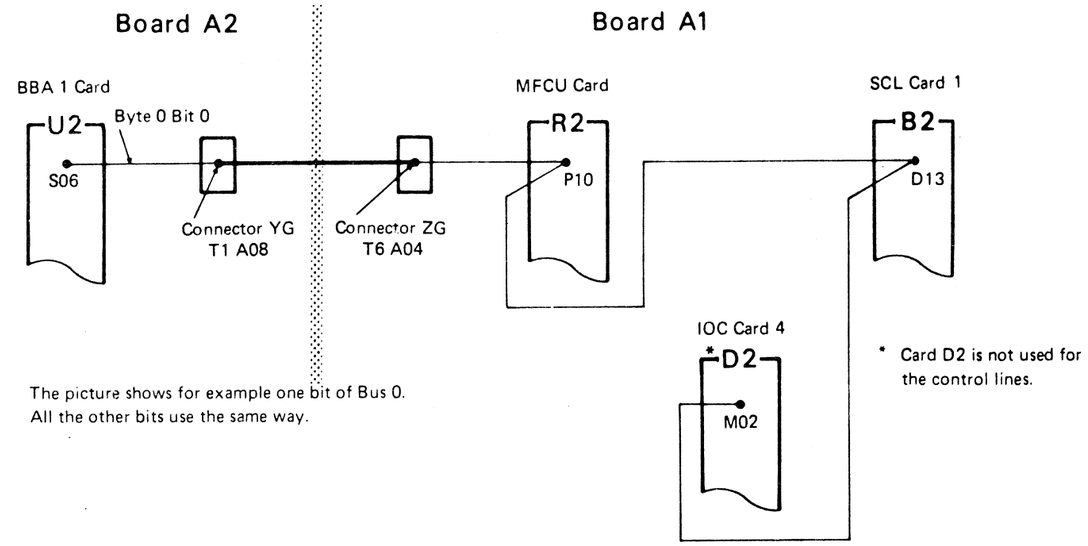

The picture shows for example one bit of Bus 0.
All the other bits use the same way.

Processor Control Lines \ Location of Card		BBA 1 A2 U2	Connector A2 YH	Connector A1 ZH	MFCU A1 R2	SCL Card 1 A1 B2	IOC Card 3 A1 E2	LOOP * HPCA card J2,L2,N2,Q2
Adapter to IOC	Valid Byte	G07	X1 E06	X6 E02	U07		D04	G03
	Valid Halfword						B09	
	I/O Exception						D2 U11	
	IRR	G12	X1 C06	X6 C02	J12	D12	B03	D02
	Parity Valid	M04	X1 D06	X6 D02	U12	U12	B12	D07
	CSR	B09	V1 D06	W6 B04	S09			M13
	EOC	P05	W1 B06	W6 B02	S06		D09	P11
	Reset					G09	J02	J05
	Restart						S08	
IOC to Adapter	TA	G08	X1 B08	X6 B04	S10	S13	D05	D05
	TC	G05	X1 D08	X6 D04	U09	B04	B10	B08
	TD	M11	X1 E08	X6 E04	U13	G08	D11	B05
	I/O Tag	J09	X1 A08	X6 A04	G10	U13	G08	B04
	Halt	P07	W1 A08	W6 D04	S08	M13	B07	G04
	CSG	J10	W1 D06		P02	D04	D10	P05
	Byte Tag						B08	

Note: Not all control lines of the I/O Subsystem are used for each adapters

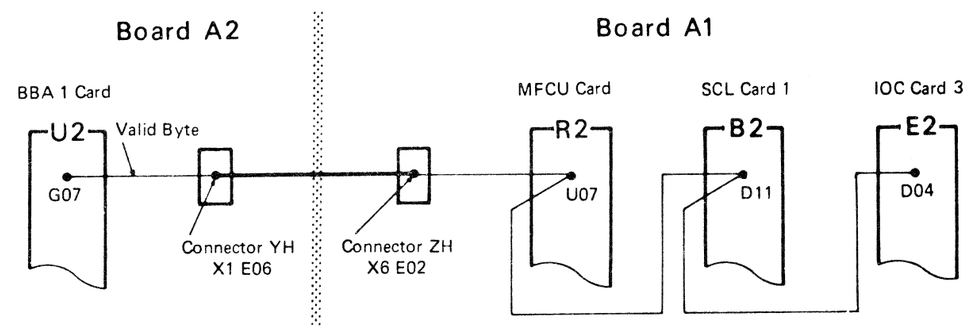

The example shows one of the control lines from the Adapter to the IOC

Support Processor Restart Line

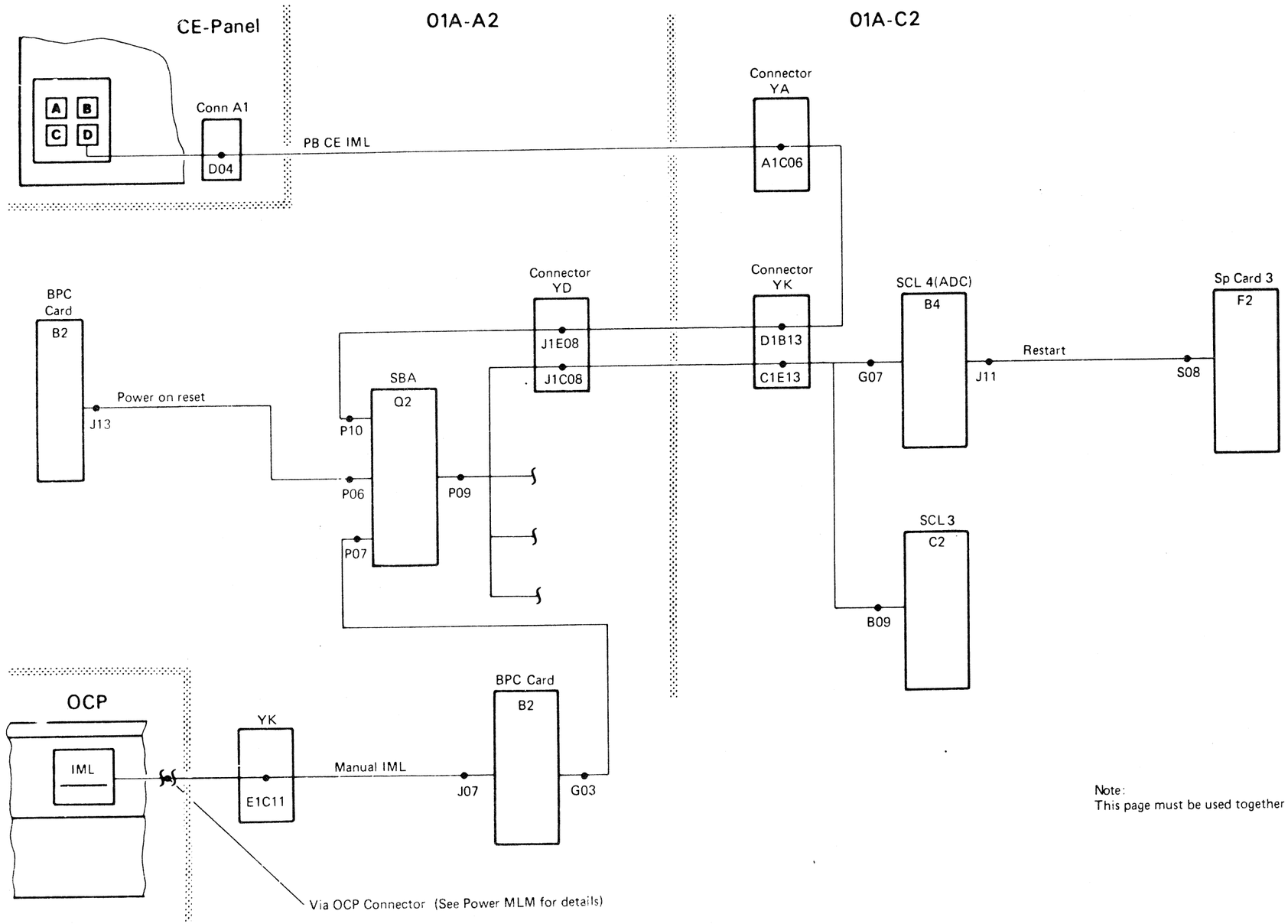

Note:
This page must be used together with MAP 0400

Supplement to MAPs, Section 2: REMOVALS and REPLACEMENTS

Table of Contents

Check and Replacement Procedures

Cable Check and Replacement Procedure

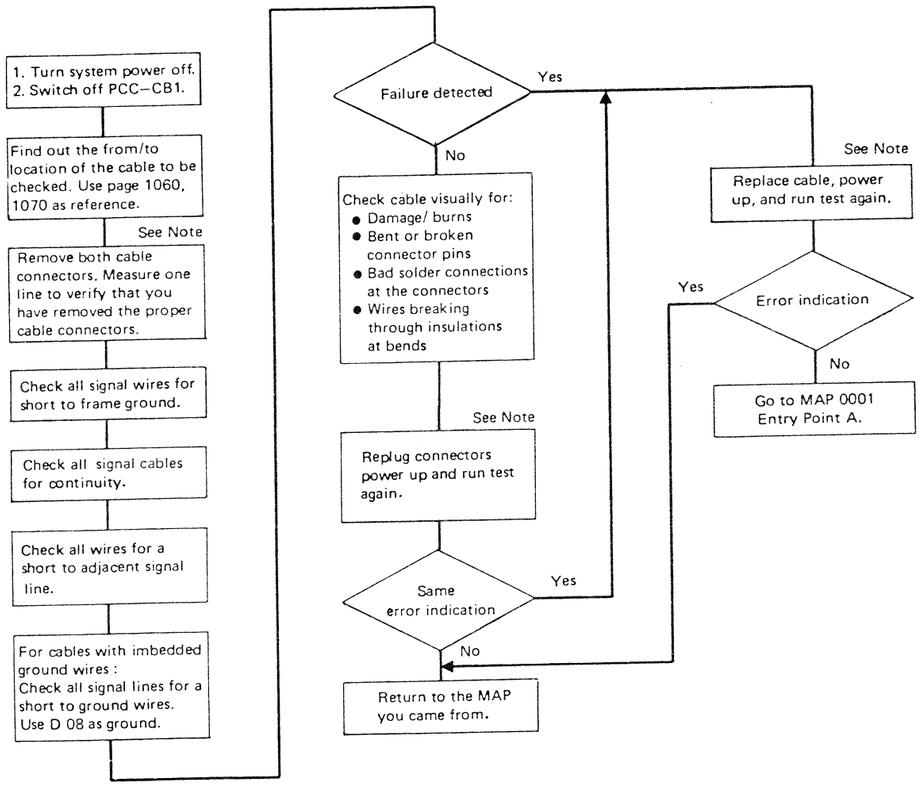

B1 Board Replacement

Note: To replace a cable in position YA or YR, loosen the upper retainer and remove it.

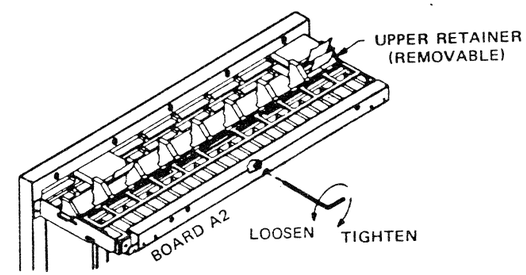

To replace a cable in position ZA to ZH, loosen the lower retainer.

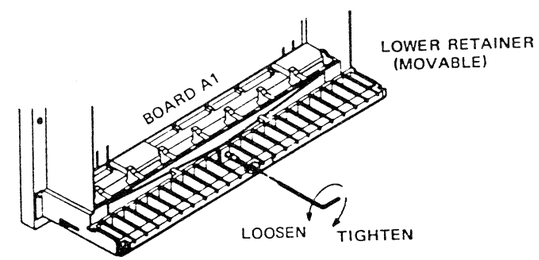

1. Turn system power off.
2. Switch off PCC–CB1.

Compare the P/N and EC number of the old and new board to verify that you have the correct board available.

Before you remove any card, cable or connector, make sure the part is labled for proper re – positioning.

1. Remove the three power connectors on the pin side of the PU/BSM board. Note down the pluggins pos. of these connectors.
2. Remove all the top connectors which are on the cards. Remove all the cards from the board by using the 'actuator tool' P/N 4 134 750.
3. Remove all cable connectors. Check for correct labeling other wise note down plugging position.
4. Remove the screws on the pin side of the board using the 'actuator tool' PN/ 4134750 and remove the board together with the card guide assembly.
5. Remove the card guide from the old board and mount onto the new board.
6. Install the new board.
7. Install cards, cables and connectors in the reverse order.

A

 MD.

22-Position Board Replacement

1. Turn system power off.
2. Switch off PCC–CB1.

Compare the P/N and EC level of the old and new board to verify that you have the correct board available for replacement.

Before you remove any card, cable or connector, make sure the part is labled for proper repositioning.

Remove all crossovers [5]. Remove all cards [6].

Loosen and remove upper retainer. [1] Remove all cable connectors in positions YA to YR.

Loosen the lower retainer [2] and remove all cables in position ZA to ZH.

Remove all cables and connectors from the pin side of the board.

Unscrew the board. Do not loosen the four screws [3] holding the air baffle. Push the board out in pin side direction [4].

Unscrew the four screws which hold the air baffle. Mount the air baffle onto the new board and fasten the four screws.

Insert new board through the gate opening, ensuring that the twin connector row (YA to YR) is at the top. Fasten board.

Check if any TIE UPs/DOWNs are installed on the board removed. Install same TIE UPs/DOWNs on the new board according to the TIE-list in Volume 30. If you replaced board A2 or C2, additional powerTIEs must be installed. Refer to TIE-list in power ALDs in Volume 40.

Install all cards, cables and connectors in reverse order of removal. Ensure proper seating of cables and connectors before you tighten the upper and lower retainer

A From Page 2010

1. Switch on the PCC–CB1
2. Turn system power on.

Select 'Test Chaining'. Run default selection.

Any reference code displayed

No → Go to MAP 0001, Entry Point A.

Yes → Enter respective MAP or Start MAP

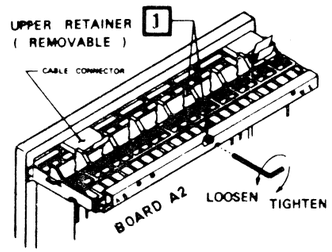

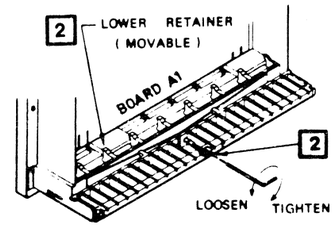

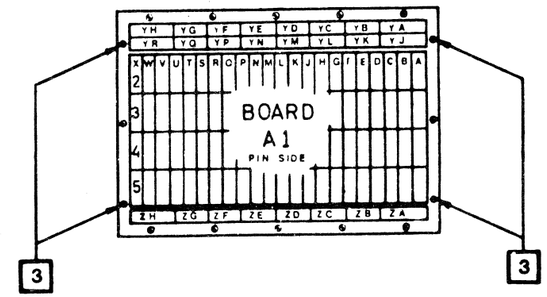

[5] Crossover connectors can easily be removed using the extraction tool P/N 454065(wire relay extraction tool).

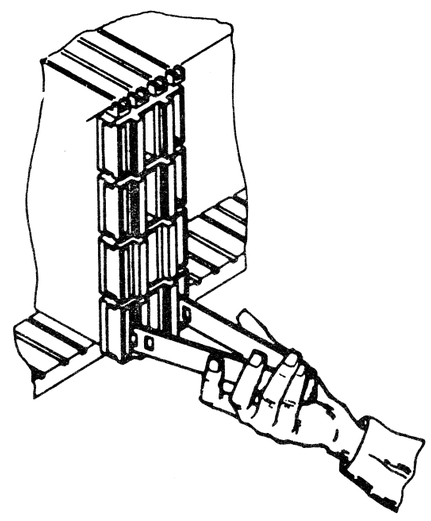

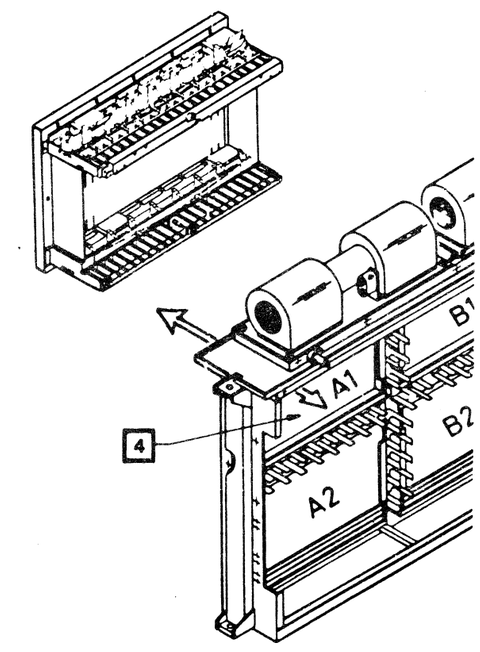

[6] To remove cards use extraction tool P/N2360375.

Handling of ESD Sensitive Parts

1. Keep the part in the original shipping container (ESD Bag) until actually ready to plug it into the machine.

2. When handling ESD sensitive parts, minimize body movements to prevent the build up of static electricity from clothing fibers, carpeting, and furniture.

3. Just prior to touching the sensitive part, discharge yourself to the frame of the machine by deliberate physical contact to the metal frame or cover. If possible, keep one hand on the frame when inserting or removing a card.

4. Avoid touching the pins on the components by handling the card by its edges or shroud. If removing a pluggable module, use the proper tool.

5. Do not place the part on the machine cover or on a metal table. These are electrical grounds, and increase the risk of damage by providing a discharge path from your body to ground through the components on the part. Parts should be immediately placed in the special ESD protective bag if it must be temporarily placed down. (Large metal objects can be discharge paths without being grounded.)

6. Do not leave parts exposed to accidental contact with other personnel (other CE's, customers, etc.) who may come into physical contact with an exposed ESD sensitive part. Replace machine covers when not actually working on the machine and do not lay ESD sensitive parts out on a table or bench unprotected.

7. If practical, store all ESD sensitive parts in a grounded metal cabinet.

8. Be extra cautious in handling during the winter heating season because low humidity contributes to static build up.

Supplement to MAPs, Section 3: ADJUSTMENTS

Table of Contents

In this system there are only adjustments needed for POWER. They are described in the POWER MANUAL.

This page has been
intentionally left blank

 MD.

Supplement to MAPs, Section 4: DIAGNOSTIC RUN PROCEDURES

Table of Contents

Maintenance/Service Program Selection - Overview

M/S Program Selection - Actions

Prerequisites:

1. IML complete
2. Control or Diagnostic diskette inserted.

How to Select a M/S Program:

1. Call M/S Program Selection. [A]
   This selection is available on the control and diagnostic diskette.
   - If the control diskette is inserted you must hold down the ALT KEY and press the DIAG key for selection.
   - If the diagnostic diskette is inserted only the DIAG key must be pressed for selection.
2. Key in the selection for the LOG, TEST or TOOL program you want to select. (A)
   The digits in front of the program name must be typed in behind the word SELECTION to select the appropriate program. A dash (-) instead of a digit indicates that the program is not available. (False diskette or wrong configuration).

M/S Program Selection - Results

[A]

LV: 78198102 IBM MAINTENANCE AND SERVICE PROGRAM SELECTION ANSWER

LOG	TEST	TOOL
(A) = LOG MODE	(A) = POWER 1)	(A) = MANUAL OPERATIONS
= REFERENCE CODE LOG	= CENTRAL COMPLEX	= UTILITIES/REMOTE
= DETAILED LOG DISPLAY	= 5424/LOOP INLINE	= COMMUNICATION ADAPTER 2)
= LAST DETAILED LOG	= DISK/TAPE INLINE	= FRIEND OR ST 4300/OLTS 3)
= REFCODE ANALYSIS	= CA INLINE 2)	= OTHERS 4)
	= TEST CHAINING	

SELECTION:

MAN

(B)

- = NOT AVAILABLE

DATA: 0000 ADDR: 000000

ANSWER

GO TO LOG SELECTION

GO TO TEST SELECTION

GO TO TOOL SELECTION

(B) A pending log may cause the message LOG-PENDING to be displayed.
If the diagnostic diskette is inserted the log cannot be performed. Insert the control diskette and press CNCL key to get the log recorded.

Notes:

1 For POWER TESTS refer to the Power Maintenance Information Manual.

2 For CA INLINE test, CA tools, and 5424 tests refer to the Supplement to MAPS (Features), section 1 for CA, section 2 5424. For loop Inlines refer to STM Features volume 15.

3 For use in case of support.
For details refer to the MI - Manual '4300 FRIEND', or page 4250 for ST 4300.

4 Not applicable

M/S Program-Handling Overview

The following tables show the available LOG, TEST, and TOOL programs with a summary of all handling prerequisites.

These tables are intended as a quick recall aid on how to set up a wanted program and how to terminate this program.

The handling prerequisites are indicated by an asterisk (*) in the respective columns.

Log Programs

This table shows the available log programs and the summary of their handling prerequisites.

A log is recorded on the diagnostic diskette only for SP machine check, SPIL program, Power, and IML.

Note 1: This log is only documented in the Field Support Center documentation.

Note 2: For power logs and ambient recording logs refer to the Power Manual in Volume 16.

Note 3: For CA unit check log refer to the CA Section in Volume 14.

Note 4: For loop adapter log refer to the Loop Section in Volume 15.

LOG PROGRAMS		SETUP								TERMINATION						
Selectable from M/S PROGRAM SELECTION menu	Selection offered in the selected menu	Page reference	Control diskette	Diagnostic diskette	PWR complete light	IML complete	CE mode switch on	Vary off line	Jumper/plug	Previous test run	Manual stop required	Re-IML required	Copy config progr	Cancel key	Vary on line	Rumtime (min)
Log mode		4030	*	*												
Erase selective log		4032	*	*												
Erase all logs		4034	*	*												
Stop before log		4036	*	*	*	*										
Disable channel logs		4030	*	*	*	*										
Enable channel logs		4030	*	*	*	*										
Reference code log		4040	*	*												
Detailed log display		4050	*	*												
PU trace log		Note 1	*													
Power log		Note 2	*	*												
SP machine check log		4070	*	*												
PU stop log		4080	*													
PU program log		4090	*													
BBA 0/1 log		4100	*													
MPX/BMPX/HSC log		4110	*													
Ambient recording log		Note 2	*													
IOC log		4120	*													
IC bus log		4130	*													
FTA log		4140	*													
Loop adapter log		Note 4	*													
CA unit check log		Note 3	*													
SPIL program log		4160	*	*												
IML log		4170	*	*												
Last detailed log		4180	*	*												
Refcode analysis		4200	*		*	*										

M/S Programs Handling - Overview (continued)

Test Programs

This table shows the available diagnostic test programs and the summary of their handling prerequisites.

TEST PROGRAMS		SETUP								TERMINATION						
Selectable from M/S PROGRAM SELECTION menu		Control diskette	Diagnostic diskette	PWR complete light	IML complete	CE mode switch on	Vary off line	Jumper/plug	Previous test run	Manual stop required	Re-IML required	Copy config progr	Cancel key	Vary on line	Runtime (min)	
Selection offered in the selected menu	Page reference															
Power		*	*													
Power controller status	Note 1	*	*								*					
Voltage measurement		*	*								*					
Central complex	4320	*	*													
PU-BSM test Note 9	4330		*	*	*						*				2/10	
IC-bus test	4329		*	*							*				<1	
BBA 0/1 test	4375		*	*					Note 5		*				<1	
HSC adapter test	4380		*	*					Note 5		*				<1	
HSC interface test	4365		*	*				*	Note 5		*				<1	
FTA test	4350		*	*	*				Note 5		*				3	
CTLI wrap test FTA (X)	4355		*	*	*			*	Note 5		*					
MPX/BMPX adapter test	4360		*	*					Note 5		*				1	
MPX/BMPX interface test	4365		*	*	*			*	Note 6		*				<1	
CA-BA adapter test	Note 2		*	*					Note 5						1	
53FD diagnostic	5100		*	*												
SBA/service bus test	4370		*	*	*										<1	
SCL IOSS/MSSS test	4385		*	*											<1	
Loop adapter offline test	Note 3		*	*											<1	
5424/Loop inline		*		*	*											
Ripple read punch test		*		*	*		*						*	*	2	
Read punch any card test		*		*	*		*			*			*	*	2	
Print feature test		*		*	*		*						*	*	2	
Read adjustment test	Note 3	*		*	*		*						*	*	5	
Loop adapter inline		*		*	*											
Adapter test		*		*	*		*						*	*	2	
TAPs		*		*	*		*						*	*	5	
Sense display		*		*	*		*				*		*	*	<1	
Stacker select		*		*	*		*						*	*	2	

This table continues on the following page.

Test Programs (continued)

Note 1: For power test description refer to the Power Manual in Volume 16.

Note 2: These tests are described in the CA Section of Volume 14.

Note 3: These tests are described in the MFCU Section of Volume 14 for 5424 in Volume 15 for the loop.

Note 4: If the functional code occupies two diskettes, the inline tests reside on the second diskette. You are prompted to change diskettes after selection of inlines.

Note 5: Run IC-bus test.

Note 6: Run IC-bus test, then the ACC/SCA (MPX/BMPX) test.

Note 7: Do not run other tests concurrent to the 'disk/tape inline' tests.

Note 8: Running time depends on environmental conditions.

Note 9: Perform IML with DIAG diskette inserted before selected this test.

TEST PROGRAMS				SETUP								TERMINATION						
				Control diskette	Diagnostic diskette	PWR complete light	IML complete	CE mode switch on	Vary off line	Jumper/plug	Previous test run	Manual stop required	Re-IML required	Copy config progr	Cancel key	Vary on line	Runtime (min)	
Selectable from M/S PROGRAM SELECTION menu	Selection offered in the selected menu		Page reference															
V	V		V	V	V	V	V	V	V	V	V	V	V	V	V	V	V	
Disk/tape inline 3310 3370 3340 3344 8809			4400	Note 4		* * * * *	* * * * *		* * * * *		Note 7	* * * * *				* * * * *	Note 8	
CA inline Inline tests Trace/dynamic display Line exerciser			Note 2	* * * *	* * *		*											
Test chaining			4325		*	*							*					

M/S Programs Handling-Overview (continued)

Tool Programs

This table shows the available tools and the summary of their handling prerequisites.

Note 1: These tools are documented in the Field Support Center Documentation.

Note 2: Refer to MAP FE90.

Note 3: These tools are described in the CA Section of Volume 14.

Note 4: Refer to the FRIEND Documentation in Volume 17.

Note 5: Not applicable for PT-CE.

TOOL PROGRAMS		SETUP									TERMINATION						
Selectable from M/S PROGRAM SELECTION menu	Selection offered in the selected menu	Page reference	Control diskette	Diagnostic diskette	PWR complete light	IML complete	CE mode switch on	Vary off line	Jumper/plug	Previous test run	Manual stop required	Re-IML required	Copy config progr	Cancel key	Vary on	Runtime (min)
V	V	V	V	V	V	V	V	V	V	V	V	V	V	V	V	V
Manual operations		Note 1	*	*												
PU manual operations		Note 1	*		*											
PU tool (Matrix)		Note 1		*	*							*				
IOC manual operations		Note 1	*		*											
IC-bus matrix		Note 1	*	*	*											
FTA manual operations		Note 1	*		*	*										
FTA trace loader		Note 1	*		*	*										
Utilities/remote		4500	*	*												
MES update		6190	*	*												
Remote support		4501	*	*												
Manual MCTF installation		4530	*	*	*	*						*				
Alter channel number		6112	*	*									*			
FTA configurator		6130	*	*									*			
BMPX configurator		6145	*	*									*			
HSC configurator		6143	*	*									*			
MCTF diskette loader		4533	*	*												
Record display		Note 1	*	*												
Diskette identification		4540	*	*								*				
Copy configurator		Note 2	*	*												
Diagnostic communication		Note 5		*	*	*										
TOD correction		6110	*	*												
Displays and Printers		6124	*		*											
Communication adapter			*	*												
Update configure table		Note 3	*	*	*	*										
UCW display			*	*	*	*										
Display trace data			*	*	*	*										
FRIEND		Note 4		*	*	*										
ST4300/OLTS		4250	*		*	*										
Others		Note 5	*	*												
Miniselect			*	*												

Log Mode Selection

Log Handling - Actions

The picture [A] appears on the screen when you select 'LOG MODE' from the 'IBM MAINTENANCE AND SERVICE PROGRAM SELECTION'.
This menu offers five selections which are described briefly below. For handling refer to the following pages.

(A) **Erase Selective Log**
Erases the reference code log of a selected unit and, if available, the detailed log of this unit.
See table in right column.

(B) **Erase all Logs**
Erases all detailed log areas and the reference code log area.

(C) **Stop before Log**
This mode immediately stops the processing unit as soon as an error is detected in a selected unit.
The units for which this can be applied are listed on screen.

(D) **Disable Channel Logs**
If this selection is entered, any logs from MPX/BMPX are suppressed to allow scoping on the standard interface or control unit.
A message is displayed on line 23 as long as this mode is active.

(E) **Enable Channel Logs**
This selection resets selection (D), thus allowing all logs to be recorded. This is the normal status.

Log Handling - Results

[A]

```
                4331 LOG MODE SELECTION
                                                UNIT = TYPE
                                                    ↑
                                                    (K)
(A)  1 = ERASE SELECTIVE LOG     SELECT UNIT
(B)  2 = ERASE ALL LOGS
(C)  3 = STOP BEFORE LOG         SELECT UNIT
(D)  4 = DISABLE CHANNEL LOGS
(E)  5 = ENABLE  CHANNEL LOGS

              CONFIGURATION INDEX:<--(F)

                                 ACTION DONE
                                     ↑
SELECTION:                           (J)      RESTART=PF4
    ↑                                                ↑
    (H)                              ANSWER          (G)
```

(F) This information is used as instructed by the MAP E680.

(G) After selection of (A) to (E) you may return to this picture by pressing PF 4.

(H) Enter field for selection code.

(J) This message is displayed after selection (D) or (E) is executed.

(K)

	Unit		Mod1	Type Mod2	Mod 11	Meaning
	TRAC	=	01	01	01	Pu Trace Log
	IC	=	2X	3X	3X	IC-Bus
	PU	=	49	4B	4B	Processing Unit
	BMPX	=	80	80	80	Block Multiplexer Channel 1
	BPX2	=	81	81	-	Block Multiplexer Channel 2
	HSC	=	82	82	-	High Speed Channel
	MPX	=	84	84	84	Multiplexer Channel
R	CA-C	=	88	88	88	CA Channel Check
	CA-U	=	89	89	89	CA Unit Check
	IOC	=	A0	A0	-	I/O Controller
	BBA1	=	A2	A2	-	Bus to Bus Adapter 1
	Loop	=	A8	A8	-	Loop Adapter
	FTA 1	=	C4	C4	C4	File/Tape Adapter 1
	FTA 2	=	C5	C5	C5	File/Tape Adapter 2
	FTA 3	=	C6	C6	-	File/Tape Adapter 3
	IML	=	E0	E0	E0	Initial Microprogram Load
R	TIMR	=	E1	E1	E1	Timer Check
R	PUPS	=	E4	E4	E4	PU Program Check Stop Log
	AMBI	=	E8	E8	E8	Ambient Recording
	PUPR	=	EA	EA	EA	PU Program Check Log
	SPMC	=	F0	F0	F0	SP Machine Check
	BBA0	=	F2	F2	F2	Bus to Bus Adapter 0
	SPIL	=	F5	F5	F5	SP Interpreter Log
	POWR	=	F7	F7	F7	Power
	3278	=	F9	F9	F9	Device Cluster Adapter
R	LOG	=	FC	FC	FC	Error during log-in

Type of log or unit which caused a log.

First two digits shown in the reference code.

Abbreviation used in the screen display.

R = Only a reference code is stored (no detailed log available).

Erase Selective Log

Log Handling - Actions

Prerequisites:

- IML
- Control diskette inserted

How to Select the Log Mode

1. Call M/S PROGRAM SELECTION.
   Hold down ALT key and press DIAG key. [A]
2. Key in selection for 'LOG MODE', press ENTER. [B]
3. Key in selection for 'ERASE SELECTIVE LOG', press ENTER. [C]

Caution:

Whenever a non empty log area is erased the log distribution is also cleared.

How to Terminate the Log Mode

Hold down ALT key and press DIAG key. The 'IBM MAINTENANCE AND SERVICE PROGRAM SELECTION' is displayed on screen.

Log Handling - Results

Screen displays:

[A] 'IBM MAINTENANCE AND SERVICE PROGRAM SELECTION'

[B] 'LOG MODE SELECTION'

[C]

```
+-----------------------------------------------------------------+
|                   4331 LOG MODE SELECTION                       |
|                                                   UNIT = TYPE   |
|                                              +-------+ +-------+ |
|                                              |       | |       | |
|     1 = ERASE SELECTIVE LOG    SELECT UNIT   |       | |       | |
|     2 = ERASE ALL LOGS                       |       | |   A   | |
|     3 = STOP BEFORE LOG        SELECT UNIT   |       | |       | |
|     4 = DISABLE CHANNEL LOGS                 |   A   | |       | |
|     5 = ENABLE  CHANNEL LOGS                 |       | +-------+ |
|                                              |       |           |
|               CONFIGURATION INDEX:           |       |           |
|                                              |       |           |
|TOD INVALID, ENTER DATE: MM DD HH MM  <-E     +-------+           |
|SELECTION: 1      DATE: ../.. ..:..  SELECT UNIT TYPE:  RESTART=PF4|
|+--------+                  ^                  ^          ^      |
|| D      |                  C                  B          F      |
|+--------+                                                        |
|                                              ANSWER             |
+-----------------------------------------------------------------+
```

(A) This area lists all units by unit name and unit type (see (K) on 4030) for which the mode ERASE SELECTIVE LOG is applicable. The unit type corresponds to the first two digits of the reference code.
An 'R' in front of the unit name indicates when there is only a reference code logged for a unit and no detailed log area is available.

(B) Enter the two-digit unit type of the log you want to erase.

(C) Enter date and time if asked to do so by message. (E)

(D) If 'LOG PENDING' is indicated in this field press 'CANCEL' key to allow the log to be recorded.

(E) If a valid TOD (time of day) cannot be fetched from the PU this message is displayed. Enter the correct value in (C) .

(F) To return to the LOG MODE SELECTION menu press PF4.

Erase All Logs

Log Handling - Actions

Prerequisites:

- IML
- Control diskette inserted

How to Select the Log Mode

1. Call M/S PROGRAM SELECTION.
   Hold down ALT key and press DIAG key. [A]
2. Key in selection for 'LOG MODE', press ENTER. [B]
3. Key in selection for 'ERASE ALL LOGS', press ENTER. [C]
   You are prompted to press PF5 (A) to reset all logs.
   When the logs are erased the message LOG ERASE COMPLETE is displayed.

Caution:

Whenever a non empty log area is erased the log distribution is also cleared.

How to Terminate the Log Mode

Hold down ALT key and press DIAG key. The 'IBM MAINTENANCE AND SERVICE PROGRAM SELECTION' is displayed on screen.

Log Handling-Results

Screen displays:

[A] 'IBM MAINTENANCE AND SERVICE PROGRAM SELECTION'

[B] 'LOG MODE SELECTION'

[C]

```
+-------------------------------------------------------------------+
|                    4331 LOG MODE SELECTION                        |
|                                                   UNIT = TYPE     |
|                                                                   |
|                                                                   |
|     1 = ERASE SELECTIVE LOG    SELECT UNIT                        |
|     2 = ERASE ALL LOGS                                            |
|     3 = STOP BEFORE LOG        SELECT UNIT                        |
|     4 = DISABLE CHANNEL LOGS                                      |
|     5 = ENABLE  CHANNEL LOGS                                      |
|                                                                   |
|               CONFIGURATION INDEX:                                |
|                                   TO ERASE PRESS PF5 <-(A)        |
|TOD INVALID, ENTER DATE: MM DD HH MM                               |
|SELECTION: 2       DATE: ../.. ..:..                  RESTART=PF4  |
|                                                          ^        |
|                                                          (B)      |
|                                                 ANSWER            |
+-------------------------------------------------------------------+
```

(A) Pressing PF5 initiates a reset of all log areas.

(B) To return to the LOG MODE SELECTION menu press PF4.

Stop Before Log

Log Handling - Actions

Prerequisites

- Power complete
- IML
- Control diskette installed

How to Select the Log Mode

1. Call M/S PROGRAM SELECTION.
   Hold down ALT key and press DIAG key. [A]
2. Key in the selection for 'LOG MODE', press ENTER. [B]
3. Key in the selection for 'STOP BEFORE LOG', press ENTER. [C]

Caution:
Reference code FE 630781 may appear on line 23 together with a warning message if the PU is not IMLed or if stopped.

IML for the PU is not performed if IML is executed with the diagnostic diskette inserted or if partial power down is active.

How to Set/Reset the Stop Mode

To set the mode enter the two digit unit type in (B) and press ENTER.
As result the message 'ACTION DONE' is displayed (C) and an asterisk (*) is set in front of the unit name in field (A) .
To reset the mode proceed as for setting the mode.
As result the message 'ACTION DONE' is displayed and the asterisk in field (A) disappears.

Operation

Whenever a log condition occurs for a unit where the stop mode is set the system enters check stop state. In addition a message for example PU STOP LOG is displayed on line 23.

How to Terminate the Log Mode

Hold down ALT key and press DIAG key. The 'IBM MAINTENENCE AND SERVICE PROGRAM SELECTION' is displayed on screen.

Log Handling - Results

Screen displays:

[A] 'IBM MAINTENANCE AND SERVICE PROGRAM SELECTION'

[B] 'LOG MODE SELECTION'

[C]
```
+-------------------------------------------------------------------+
|                    4331 LOG MODE SELECTION                        |
|                                                   UNIT = TYPE     |
|                                                 +-------+         |
|                                                 |       |         |
|     1 = ERASE SELECTIVE LOG    SELECT UNIT      |       |         |
|     2 = ERASE ALL LOGS                          |   (A) |         |
|     3 = STOP BEFORE LOG        SELECT UNIT      |       |         |
|     4 = DISABLE CHANNEL LOGS                    |       |         |
|     5 = ENABLE  CHANNEL LOGS                    |       |         |
|                                                 +-------+         |
|              CONFIGURATION INDEX:                                 |
|                                 ACTION DONE                       |
|SELECTION: 3                          SELECT UNIT TYPE:  RESTART=PF4|
|                                 (C)                 (B)       (D) |
|                                                                   |
|                                                       ANSWER      |
+-------------------------------------------------------------------+
```

(A) In this field all unit names and their unit types are shown for which the mode 'stop before log' is applicable.

Unit	Type	Unit	Type
CAC	= 88	Loop	= A8
MPX	= 84	BBA	= F2 (BBA0 and BBA1)
BMPX	= 80	PU	= 49/4B
BMPX 2	= 81	FTA1	= C4
HSC	= 82	FTA2	= C5
FTA3	= C6	IOC	= A0

- Stop before log is already active for these units.
  Stop before log is only possible for the units listed.

(D) Press PF4 to return to the Log Mode menue selection picture.

Reference Code Log

Log Handling - Actions

Prerequisites:

- None

How to Select the Log

1. Call M/S PROGRAM SELECTION.

   Hold down ALT key and press DIAG key. [A]

2. Key in selection for 'REFERENCE CODE LOG', press ENTER. [B]

This selection causes the display LOG DISTRIBUTION STATISTIC to be displayed first. With PF5 the REFERENCE CODE LOG DISPLAY can then be called.

Caution:

Whenever a non empty log area is erased, the log distribution is also cleared.

Communication adapter unit check logs and ambient recording logs are not stored in the 'reference code log' and the 'log distribution statistic'. They can only be displayed with 'Detailed Log Display' selection.

How to Terminate the Log Display

Press ALT key and press DIAG key.
The 'IBM M/S Program Selection' is displayed on the screen.

For the following log types there is no detailed log available. Only a reference code log is stored.

CA channel check log
PU program stop log
Time log
Error during log-in

Log Handling - Results

Screen displays:

[A] IBM MAINTENANCE AND SERVICE PROGRAM SELECTION

[B]

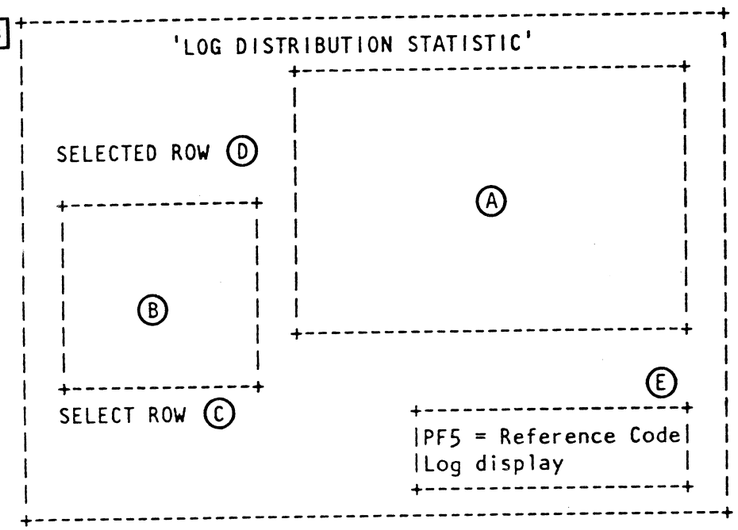

A, B — See picture A in example on next side

C — Selection of any row in A

D — Indication what row in A is selected.

E — To display all logged reference codes, press PF5. You get the picture 'REFERENCE CODE LOG DISPLAY' [C] .

[C]

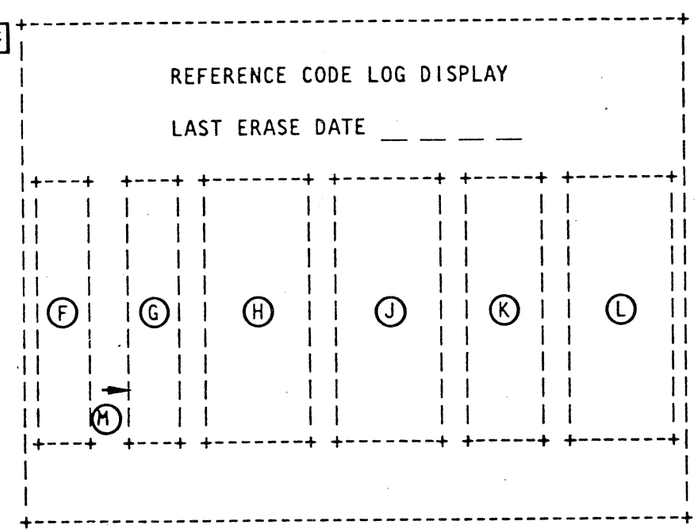

F — Address of the reference code(s) logged.

G — Name of the unit.

H — Reference code.

J — Additional information (Reference code extension).

K — The count shows how often this log had occurred.

L — Time and date of recorded log.

M — The arrow points to the last log.

Reference Code Log

The reference code log consists of two parts:

- Log distribuion statistics Ⓐ
- Reference code log display Ⓑ

Log Distribution Statistics

Purpose:
Keeps track of the log history. A reference code pre-analysis is performed to offer the correct reference code for entering the MAP.

Example of Log Distribution

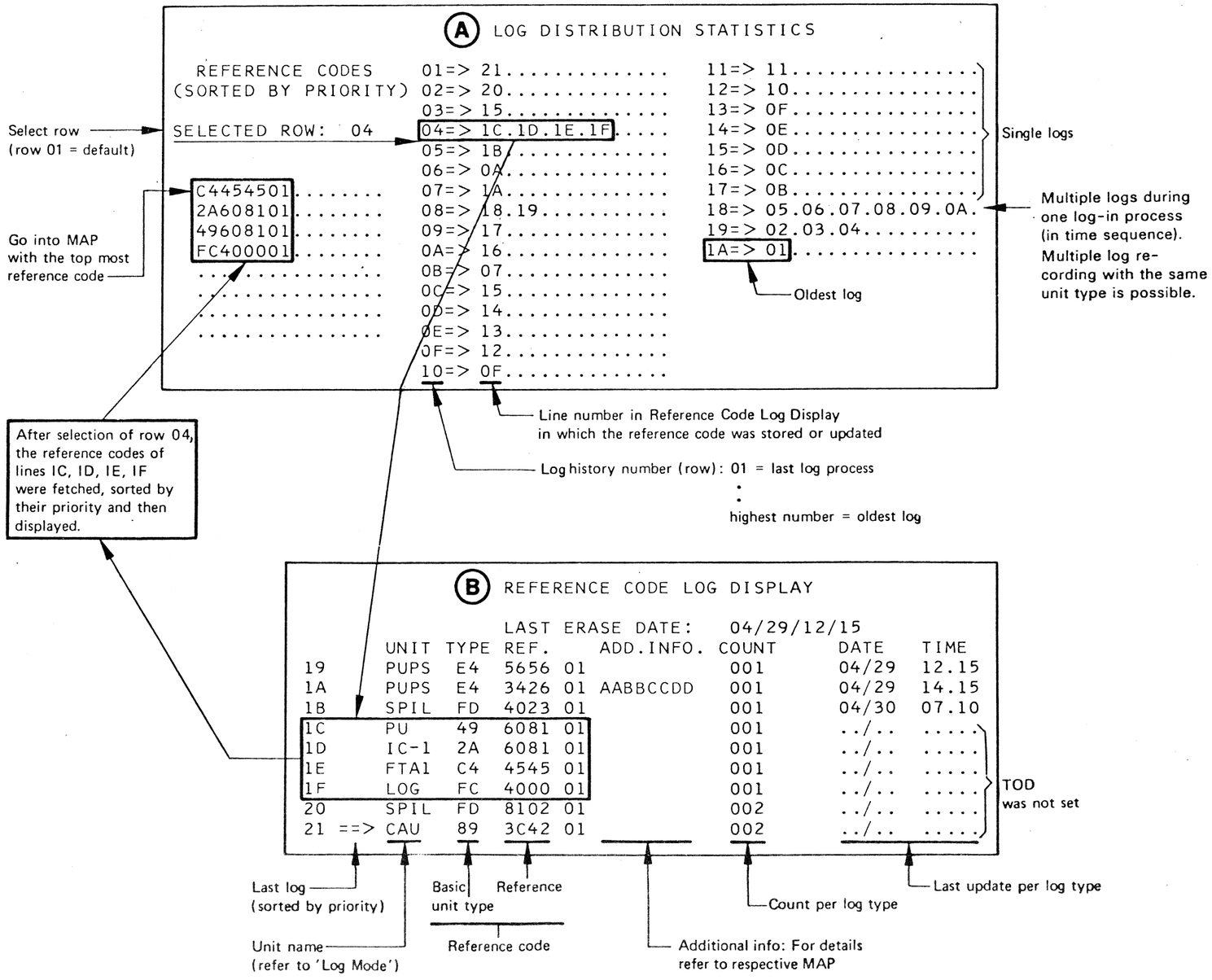

Detailed Log Display

Selection

The picture shown on the right appears on screen when you select 'DETAILED LOG DISPLAY' from the 'IBM MAINTENANCE AND SERVICE PROGRAM SELECTION' picture. For selection and interpretation of the logs which are listed in Ⓐ, Ⓑ and Ⓒ of this picture, refer to the following pages.

Ⓐ Ⓑ Ⓒ Selection codes and log name

Ⓓ The digit in front of the log name must be typed in behind the word SELECTION to select the appropriate log. A dash (-) instead of digit indicates that the log is not available. (False diskette or wrong configuration).

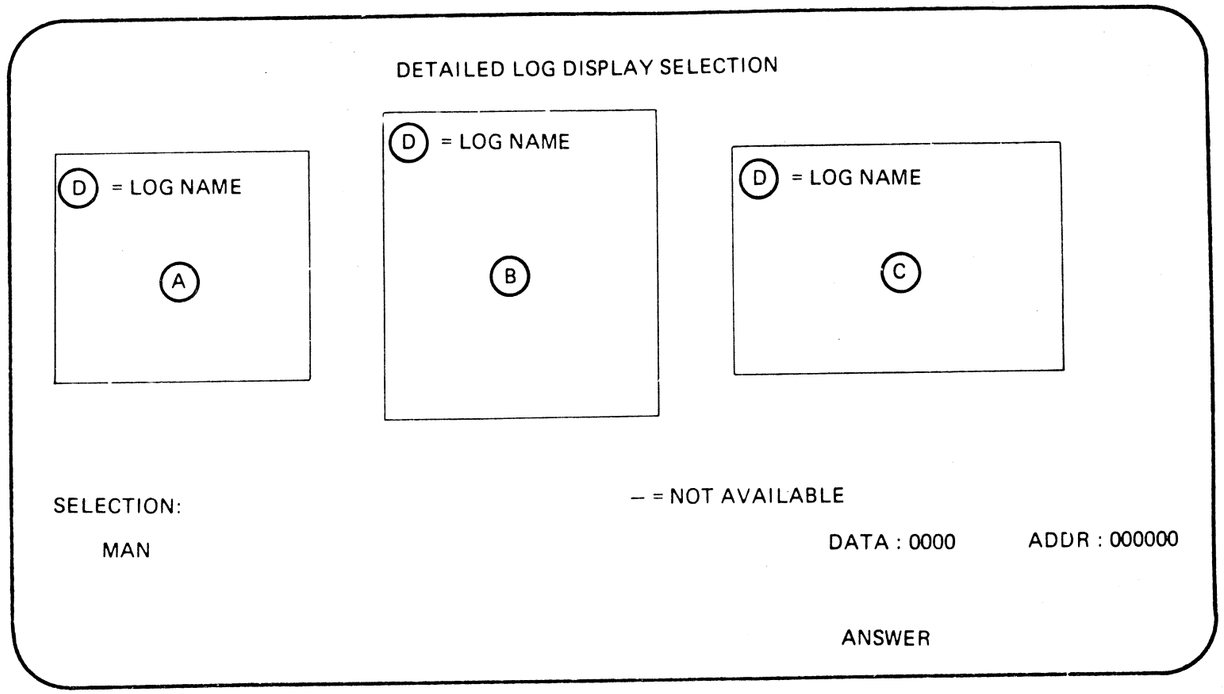

Detailed Log Display (continued)

Explanation of the Common Area on Screen

Log Handling - Actions

Prerequisites:

- Control diskette inserted

How to Select the Log

1. Call M/S PROGRAM SELECTION.
   Hold down ALT key and press DIAG key. [A]
2. Key in selection for 'DETAILED LOG DISPLAY', press ENTER. [B]
3. Key in the desired selection, press ENTER. [C]
   A detailed log display falls into two parts, the common area and the area which contains information specific to the selected log.

   The common area is explained here for all the following detailed log displays.

How to Terminate the Log Display

Hold down ALT key and press DIAG key. The 'IBM MAINTENANCE AND SERVICE PROGRAM SELECTION' is displayed on screen.

 MD.

Log Handling - Results

Screen displays:

[A] IBM MAINTENANCE AND SERVICE PROGRAM SELECTION

[B] DETAILED LOG DISPLAY SELECTION

[C]

```
+-------------------------------------------------------------+
|                    ____ LOG DISPLAY          PAGE:           |
| LAST ERASE DATE:(D)  FIRST LOG:(C)  LAST LOG:(B)             |
| LOG COUNT:(E)                LAST REF.CODE:(A)               |
|                                                              |
|                                                              |
|                                                              |
| SELECTION:                                                   |
+-------------------------------------------------------------+
```

Common Area

Specific area, wich is different for the various units

Shown on the following pages

Explanation of the common area:

The information given in the common area relates only to this log type, for example: PU log, BBA log etc.

(A) The last reference code that was generated for this log type is shown on every page of the log display. Up to four bytes of additional information can be displayed together with the reference code.

(B) The time when the last reference code was logged is shown here.

(C) The time when the first reference code was logged after the last erase date is shown here.

(D) Last erase date for this log type.

(E) This shows how many logs occurred since the last erase date independent from the kind of error, i. e. different reference codes might have come up for this unit.

SP Machine Check Log Display

Log Handling - Actions

Prerequisites:

- Control or diagnostic diskette inserted.

How to Select the Log

1. Call M/S PROGRAM SELECTION.
   Hold down ALT key and press DIAG key. [A]
2. Key in selection for 'DETAILED LOG DISPLAY', press ENTER. [B]
3. Key in selection for SP Machine Check log display, press ENTER. [C]

How to Terminate the Log Display

Hold down ALT key and press DIAG key. The 'IBM MAINTENANCE AND SERVICE PROGRAM SELECTION' is displayed on screen.

Log Handling - Results

Screen displays:

[A] 'IBM MAINTENANCE AND SERVICE PROGRAM SELECTION'

[B] 'DETAILED LOG DISPLAY SELECTION'

[C]

```
+-------------------------------------------------------+
|                                                       |
|                  _____ LOG DISPLAY                    |
|                                                       |
| LAST ERASE DATE:_____ FIRST LOG:_____ LAST LOG:_____  |
| LOG COUNT:____                LAST REF.CODE: _____    |
| +-----------------------------------------------------+
| |                                                     |
| |                                                     |
| |                                                     |
| |                                                     |
| |                                                     |
| |                                                     |
| +-----------------------------------------------------+
| REFCODE = ____A____                                   |
+-------------------------------------------------------+
```

Common Area

Specific Area

(A) This reference code corresponds to the data in field. (B)

(B) Hardware data to be used in case of support.

(C) No time of occurance is recorded for this log.

Last PU Stop Log Display

Log Handling - Actions

Prerquisites

- Control diskette inserted

How to Select the Log

1. Call M/S PROGRAM SELECTION.
   Hold down ALT key and press DIAG key. [A]
2. Key in selection for 'DETAILED LOG DISPLAY', press ENTER. [B]
3. Key in the selection for 'Processing Unit Stop Log', press ENTER. [C]

How to Terminate the Log Display

Hold down ALT key and press DIAG key. The 'IBM MAINTENANCE AND SERVICE PROGRAM SELECTION'; is displayed on screen.

Log Handling - Results

Screen displays:

[A] 'IBM MAINTENANCE AND SERVICE PROGRAM SELECTION'

[B] 'DETAILED LOG DISPLAY SELECTION'

[C]

```
+-------------------------------------------------+
|                                                 |
|                PU STOP DISPLAY                  |
|                                                 |
| LAST ERASE DATE:_____ FIRST LOG:_____ LAST LOG:_____|
| LOG COUNT:____          LAST REF.CODE:          |
| ADDITIONAL REF. CODE (S)                        |
|      00000000 00000000 00000000                 |
| +-----------------------------------------------+ |
| |                                               | |
| |                                               | |
| |                    (A)                        | |
| |                                               | |
| |                                               | |
| |-----------------------------------------------| |
| | NSAT CONTENT. (LAST ENTRY REPRESENTS SAT)     | |
| |     011D011D 011D011D 011D011D 011D011D       | |
| |                                               | |
| +-----------------------------------------------+ |
| SELECT: S= REF. CODE SUMMARY  B= BSM-ADDR-STATISTIC |
|         P= PREVIOUS LOG(S)                      |
|                                                 |
|                                                 |
+-------------------------------------------------+
```

(C)

(B)

(D)

(A) Hardware data for use in case of support.

(B) This field displays the 'Non-sequential PU Instruction Address Trace' (NSAT).

(C) These are symptom codes. The first one from left to right is included in the last reference code in the common area.

(D) Subselection S causes a PU-LOG SUMMARY to be displayed [D]. Subselection B causes a BSM. ADDR-STATISTIC to be displayed [E]. Subselection P causes a display of the previous log (s). A maximum of 6 previous logs can be displayed, one at a time.

[D]

```
+-------------------------------------------------+
|                                                 |
|                PU LOG SUMMARY                   |
|   REF.CODE REASON                               |
|                                                 |
|     LAST-00    4B601001 23                      |
|     LAST-01    4B804001 13                      |
|                4B104001 79                      |
|                4B218001 87 88                   |
|                                                 |
|     LAST-11    4B930101 49 5C                   |
|     LAST-12    4B104001 79                      |
|     LAST-13    4B104001 79                      |
|                                                 |
| SELECT:  (E)     (G)    (F)          ADDR.:     |
|                                                 |
+-------------------------------------------------+
```

(H)

The recorded logs are listed in the sequence of their occurance. LAST-00 is the most recent one. The highest number is the oldest log.

(E) Note that within one log more than one reference code can be generated. (H)

(F) These are check numbers. They are the interpretation of the four digits (G) of the reference code for ease of maintenance.

[E]

```
+-------------------------------------------------+
|                                                 |
|          BSM-ADDR-STATISTIC                     |
|                                                 |
| +-----+   +-----+   +-----+   +-----+   +-----+ |
| |     |   |     |   |     |   |     |   |     |
| +-----+   +-----+   +-----+   +-----+   +-----+ |
|                                                 |
+-------------------------------------------------+
```

(J)

(J) This display shows a maximum of 8 fields each 3 bytes wide. These fields indicate addresses at which a uncorrectable error had occurred. Enter this information in the UNCADR field of DM test to check for defective storage cards.

PU Program Log Display

Log Handling - Actions

Prerequisites:

- Control diskette inserted

How to Select the Log

1. Call M/S PROGRAM SELECTION.
   Hold down ALT key and press DIAG key. [A]
2. Key in selection for DETAILED LOG DISPLAY, press ENTER. [B]
3. Key in the selection for 'Processing Unit Program LOG', press ENTER. [C]

How to Terminate the Log Display

Hold down ALT key and press DIAG key. The 'IBM MAINTENANCE AND SERVICE PROGRAM SELECTION' is displayed on screen.

Log Handling - Results

Screen displays:

[A] 'IBM MAINTENANCE AND SERVICE PROGRAM SELECTION'

[B] 'DETAILED LOG DISPLAY SELECTION'

[C]

```
+-------------------------------------------------------+
|                                                       |
|          PU PROGRAM LOG DISPLAY      PAGE: 0001       |
|                                                       |
| LAST ERASE DATE:_____ FIRST LOG:_____ LAST LOG:_____  |
|                                                       |
| LOG COUNT:_____            LAST REF.CODE: _________  |
|                                 +-------------------+ |
| REFERENCE CODE: ___(A)___       |                   | |
|                                 |       (E)         | |
|                                 |                   | |
| SEQ.NUMBER:(B) LOG COUNT:(C)    |                   | |
|                                 +-------------------+ |
| DATE: ___(D)___                                       |
|                            PRESS ENTER FOR NEXT LOG   |
|                                                       |
| SELECTION:                                            |
|                                                       |
+-------------------------------------------------------+
```

Common Area

Specific Area

(A) This reference code correponds to the data in field. (E)

(B) This is the sequence number of this specific reference code. (A)

(C) If one and the same reference code came up more than once, only the count is updated. This shows how often the same error occurred.

(D) The date when the reference code (A) occurred.

(E) Hardware data for use in case of support.

Byte	Explanation
0	Opcode
1	Length of Data - 1
2- 7	Time of Day
8-15	ID in hex of failing program module
16-17	Not used
18-19	Offset where error was detected in module
20-23	Designer dependent information

BBA 0/1 Log Display

Log Handling - Actions

Prerequisites:

- Control diskette inserted

How to Select the Log

1. Call M/S PROGRAM SELECTION.
   Hold down ALT key and press DIAG key. [A]
2. Key in selection for 'DETAILED LOG DISPLAY', press ENTER. [B]
3. Key in the selection for 'BBA0/1 LOG', press ENTER. [C]
4. Key in 0 or 1 according to the BBA Log you want to see (H) (only if both, BBA0 and BBA1 are installed).

How to Terminate the Log Display

Hold down ALT key and press DIAG key. The 'IBM MAINTENANCE AND SERVICE PROGRAM SELECTION' is displayed on screen.

Log Handling - Results

Screen displays:

[A] 'IBM MAINTENANCE AND SERVICE PROGRAM SELECTION'

[B] 'DETAILED LOG DISPLAY SELECTION'

[C]

```
+-------------------------------------------------------------------------------+
|                                BBA LOG DISPLAY                      PAGE:      |
|  LAST ERASE DATE:              FIRST LOG:                   LAST LOG:         |
|  LOG COUNT:  (K)                                  LAST REF CODE: XXXXXXXX (L)  |
|  REFERENCE CODE:  (A)                  +-------------------------------------+
|  SEQ NUMBER:  (B)   LOG COUNT:  (C)    |                                     |
|                                        |                  (G)                |
|  DATE:  (D)         ADAPTER: STOPPED (E)                                     |
|                                        +-------------------------------------+
|  DEVICE ADDRESS:  (F)                                                         |
|  LAST X ERRORS OF 000X REPORTED BY SP:                                        |
|      XXXXXXXX XXXXXXXX XXXXXXXX XXXXXXXX   (J)                                |
|  SELECTION:                    SELECT BBA 00R 1:   (H)                        |
+-------------------------------------------------------------------------------+
```

Common Area

Specific Area

(A) This rererence code corresponds to the data displayed in field (G).

(B) This is the sequence number of this specific reference code. (A)

(C) If one and the same reference code came up more than once, only the count is updated. This shows how often the same error occurred. This count relates to the log dump displayed in. (G)

(D) The date when the reference code (A) occurred.

(E) Displays the status of the adapter e.g. STOPPED.

(F) This shows the device address of the device with which the PU had communicated when the error occurred.

(G) Hardware data to be used in case of support.

(J) Up to 8 last SP detected reference codes are stored here if the SP was not able to complete a communication via BBA 0 to the PU. The left-most reference code is the most recent one.

(K) Sum of all logged errors detected by PU and SP.

(L) The last reference code is caused by an SP or PU detected log. If this code matches with the last recent one in (J) it is an SP detected log.

MPX/BMPX, HSC Log Display

Log Handling - Actions

Prerequisites:

- Control diskette installed

How to Select the Log

1. Call M/S PROGRAM SELECTION.
   Hold down ALT key and press DIAG key. [A]
2. Key in selection for 'DETAILED LOG DISPLAY', press ENTER. [B]
3. Key in selection for 'MPX/BMPX LOG', press ENTER.
   This picture offers in its lower part the appropriate selection for MPX,BMPX, and HSC.
4. Key in selection for the log to be displayed, for example: BMPX1 [C]

How to Terminate the Log Display

Hold down ALT key and press DIAG key. The 'IBM MAINTENANCE AND SERVICE PROGRAM SELECTION' is displayed on screen.

Log Handling - Results

Screen displays:

[A] 'IBM MAINTENANCE AND SERVICE PROGRAM SELECTION'

[B] 'DETAILED LOG DISPLAY SELECTION'

[C]

```
+-------------------------------------------------------+
|                                                       |
|              BMPX1 LOG DISPLAY          PAGE:         |
|                                                       |
| LAST ERASE DATE:_____ FIRST LOG:____ LAST LOG:_____   |
| LOG COUNT:__              LAST REF.CODE: _______ __   |
|                                 +-------------------+ |
| REFERENCE CODE:  ___(A)___      |                   | |
| SEQ.NUMBER:(B)__ LOG COUNT:(C)  |        (H)        | |
| DATE:__(D)____   ADAPTER: (E)   |                   | |
|                  +-----+        +-------------------+ |
| DEVICE ADDRESS:  | (F) |                              |
|                  +-----+                              |
(K)-->TIMEOUT ON DEVICE: XXX                            |
|                 +--------------+  +----------------+  |
| MAP COLUMN 2:   |1 2 3 4 5 6 7 |  |      (L)       |  |
|                 |  X   ↑   X   |  |                |  |
|                 +------|-------+  +----------------+  |
|  +--------------+     |    PRESS ENTER FOR NEXT LOG   |
(J)--> |ADD DEV. STAT.|  |                              |
|  +--------------+     (G)                             |
| SELECTION:                                            |
+-------------------------------------------------------+
```

Common Area

Specific Area

(A) This reference code corresponds to the data displayed in field (H).

(B) This is the log sequence number of the specific reference code (A). The logs are numbered per adapter in the sequence of their occurance.

(C) If one and the same log came up more than once, only the count is updated. This shows how often the same error occurred.

(D) The date when the reference code (A) occurred.

(E) Displays the status of the adapter e.g. STOPPED.

(F) This shows the device address of the erroneous control unit connected to the standard interface.

(G) These seven digits are used additionally within the MAPs for further decision which FRU(s) to replace.

(H) Hardware data to be used in case of support.

(J) The last 32 device addresses are displayed here, four at a time.
With PF5 the next four addresses are displayed.
The device address with the highest count is displayed first. The count can be from 01 to 15.

(K) This message appears when an adapter timeout was detected. This may happen when a read is attempted on a blank tape on device XXX.

(L) The standard interface is displayed here.

IOC Log Display

Log Handling - Actions

Prerequisites:

- Control diskette inserted

How to Select the Log

1. Call M/S PROGRAM SELECTION.
   Hold down ALT key and press DIAG key. [A]
2. Key in selection for 'DETAILED LOG DISPLAY', press ENTER. [B]
3. Key in selection for 'IOC Log', press ENTER. [C]

How to Terminate the Log Display

Hold down ALT key and press DIAG key. The 'IBM MAINTENANCE AND SERVICE PROGRAM SELECTION' is displayed on the screen.

Log Handling - Results

Screen displays:

[A] 'IBM MAINTENANCE AND SERVICE PROGRAM SELECTION'

[B] 'DETAILED LOG DISPLAY SELECTION'

[C]

```
+-------------------------------------------------------+
|                                                       |
|                    IOC LOG DISPLAY                    |
|                                                       |
| LAST ERASE DATE:_____ FIRST LOG:_____ LAST LOG:_____  |
| LOG COUNT:____                LAST REF.CODE: _____    |
| REFERENCE CODE:  (C)  +--------------------------+    |
| SYMPTOM CODES:        |                          |    |
| +------------+        |                          |    |
| |            |        |                          |    |
| |            |        |          (A)             |    |
| |    (B)     |        |                          |    |
| |            |        |                          |    |
| +------------+        +--------------------------+    |
|                                                       |
| SELECTION:                                            |
+-------------------------------------------------------+
```

Common Area

Specific Area

(A) Symptom codes for use in case of support.

(B) Hardware data for use in case of support.

(C) Shows the reference code of the error which caused the data displayed, to be sampled. This must not be the last reference code.

IC-Bus Log Display

Log Handling - Actions

Prerequisites:

- Control diskette inserted

How to Select the Log

1. Call M/S PROGRAM SELECTION.
   Hold down ALT key and press DIAG key. [A]
2. Key in selection for 'DETAILED LOG DISPLAY', press ENTER. [B]
3. Key in the selection for 'IC-BUS (DM) LOG', press ENTER. [C]

How to Terminate the Log Display

Press ALT key and hold and press DIAG key. The 'IBM MAINTENANCE AND SERVICE PROGRAM SELECTION' is displayed on screen.

Log Handling - Results

Screen displays:

[A] 'IBM MAINTENANCE AND SERVICE PROGRAM SELECTION'

[B] 'DETAILED LOG DISPLAY SELECTION'

[C]

```
+-------------------------------------------------------+
|                                                       |
|                IC-BUS LOG DISPLAY                     |
|                                                       |
| LAST ERASE DATE:____ FIRST LOG:____ LAST LOG:____     |
|                                                       |
| LOG COUNT:____        LAST REF.CODE: _____________    |
|                       +-----------------------+       |
|                       |                       |       |
|                       |                       |       |
|                       |          (A)          |       |
|                       |                       |       |
|                       +-----------------------+       |
+-------------------------------------------------------+
```

Common Area

Specific Area

Explanation of the Specific Area:

(A) Hardware data to be used in case of support.

STM

FTA Log Display

Log Handling - Action

Prerequisites:

- Control diskette inserted

How to Select the Log

1. Call M/S PROGRAM SELECTION.
   Hold down ALT key and press DIAG key. [A]
2. Key in selection for 'DETAILED LOG DISPLAY', press ENTER. [B]
3. Key in the selection for 'FTA LOG DISPLAY', press ENTER. [C]
4. Key in the IC-address of the FTA log display wanted. (D)

How to Terminate the Log Display

1. Press ALT key and hold and press DIAG key.
   The 'IBM MAINTENANCE AND SERVICE PROGRAM SELECTION' is displayed on screen.

Log Handling - Results

Screen displays:

[A] 'IBM MAINTENANCE AND SERVICE PROGRAM SELECTION'

[B] 'DETAILED LOG DISPLAY SELECTION'

[C]

```
                    FTA LOG DISPLAY
LAST ERASE DATE:_____ FIRST LOG:_____ LAST LOG:_____
LOG COUNT:_____          LAST REF.CODE_____ _____

                  LAST DETAILED LOG

            PLS SELECT FTA PHYSICAL ADDR

FTA ADDRESS..: 2  4  9  X

FTA ATTACHED.: Y  Y  Y  N
                9 = FTA-1   4 = FTA-2   2 = FTA-3
SELECTION: (D)
```

Common Area

<------ FTA address

See picture [D] on next page.

FTA Log Display (continued)

Log Handling - Results

D

```
LV: 80267133            FTA-1 LOG DISPLAY                          PAGE: 0001
LAST ERASE DATE: 10/02 12:54    FIRST LOG: 10/02 13:03     LAST LOG: 10/02 13:40
LOG COUNT: 000003                              LAST REF.CODE: C430F001 00000000

REFERENCE CODE: CA 30F0 01 <-- (A)
                                  0..: 23020200 450E8A6C 77787777 000068A0
                                  16.: 08C20308 08C866FF 000E8A21 30000091
ADPT:  TRAP STOP   CTL: 0004      32.: 18DCF4A0 3002C4D2 E5E6FFFF 0001FFE5
                                  48.: D50F90DB 18260080 48420204 00008001
SEQ. NO. -- S Y M P T O M S --    64.: 23030000 00000000 00000000 00000000
  003 =  ....  ....  ....  30F0
  002 =  ....  ....  ....  30F0    CHK.: PSO CRG ALU PPC SPC PXC SXC SYN FCO
  001 =  ....  ....  ....  30F0    CNT.: 000 000 000 000 000 000 000 000 000
  ... =  ....  ....  ....  ....
   (C)          (B)
                                  PRESS ENTER COMP/3340 DA LOG <--- (E)
SELECTION:
                        4MB VSE TIMER: ON          DATA:        ADDR:
                        TOD: SEC

2108
```

Common Log Area

Specific Log Area

(A) This reference code corresponds to the data in the specific area.

(B) This area shows all the symptoms which were collected for the error. The first symptom from left in the top row is included in the reference code.

(C) This filed shows the log sequence number.

(D) This field shows 80 bytes of data. Byte 62, bit 0 = address valid bit. Byte 63 contains the address of the last used device. All other data has to be used in case of support only.

(E) Pressing ENTER causes a second page to be displayed. This page, if not empty, displays either compatibility log or functional adapter log (3340) information. E

These two bytes have the same contents as byte 38, 39. They show the FSI code.

E

```
LV: 80011034      COMP FEAT/3340 DIR ATTACHM LOG DISPLAY,FTA-1       PAGE: 0002
LAST ERASE DATE: 02/15 11:11    FIRST LOG: 02/15 11:13     LAST LOG: 02/15 11:15
LOG COUNT:000005 LAST REF.CODE: C4307001 00000000

        LAST    REF.CODE: C400DA01 01009180
ADDR:   0/32---- 4/36---- 8/40---- 12/44--- 16/48--- 20/52--- 24/56--- 28/60---
00-31:  D6258FB9 CA932F34 FF4202FF 42010000 10000100 40010010 880961ED 00010783
32-63:  1E010000 80009180 00000000 00000000 00000000 00000000 00000000 00000000
        LAST-1  REF.CODE: C400DA01 01009180
00-31:  D6258FB9 CA34EEE8 FF4202FF 42010000 10000100 40010010 880961ED 00010783
32-63:  1E010000 80009180 00000000 00000000 00000000 00000000 00000000 00000000
        LAST-2  REF.CODE:
00-31:  ........ ........ ........ ........ ........ ........ ........ ........
32-63:  ........ ........ ........ ........ ........ ........ ........ ........
        LAST-3  REF.CODE:
00-31:  ........ ........ ........ ........ ........ ........ ........ ........
32-63:  ........ ........ ........ ........ ........ ........ ........ ........
                                  PRESS ENTER FOR FTA LOG
SELECTION:
                        370 TIMER: ON              DATA:        ADDR:
                        TOD: SEC

2108
```

Byte 12 = DASD adapter number and channel address
13 = Device address

This display shows log data of the last four logs which have occurred. 64 data bytes are displayed for each log.

Byte	Meaning
0-11, 15	All these bytes are only used for support cases.
14	Bit 0 = 0 indicates a functional adapter log. = 1 indicates a compatibility feature log.
12, 13	See highlight in picture E .
16-39	Contain the sense bytes for the functional adapter log or the compatibility log. The meaning of these bytes is explained in the appropriate I/O manual (3340, 3310, 3370).
40-63	For explanation refer to the FSC documentation.

Format Zero Messages and Sense Bytes

Only format 0 is used in the 4331 processors.
The following tables show the meaning of the sense bytes 8-23 and the messages of format zero.

From page 4465

MLX 9

Format 0

Sense bytes 8-23

Sense Byte	Meaning
0-7	Same meaning as for sense bytes in formats 1, 4, 5 and 6. See respective I/O MLM.
8-21	These bytes are not used. Contents is X'00'.
22, 23	These two bytes contain the skip displacement value of a track. This applies only if a sense command is chained from a successful Read Home Address command. Bytes 22, 23 have no meaning for other operations.

Messages

Message	Meaning
X'0'	No message available
X'1'	Invalid command
X'2'	Invalid command sequence
X'3'	CCW count less than required
X'4'	Invalid argument used for command
X'5' thru X'C'	Not used
X'D'	Operation attempted on defective track (see Note)
X'E'	Multi track or overflow operation switched from alternate track
X'F'	Not used

This page has been
intentionally left blank

SPIL Program Log Display

Log Handling - Actions

Prerequisites:

- Control diskette or diagnostic diskette inserted.

How to Select the Log

1. Call M/S PROGRAM SELECTION.
   Hold down ALT key and press DIAG key. [A]
2. Key in selection for 'DETAILED LOG DISPLAY', press ENTER. [B]
3. Key in selection for 'SPIL Program Log' display, press ENTER. [C]

How to Terminate the Log Display

Press ALT key and hold and press DIAG key. The 'IBM MAINTENANCE AND SERVICE PROGRAM SELECTION' is displayed on screen.

Log Handling - Results

Screen displays:

[A] 'IBM MAINTENANCE AND SERVICE PROGRAM SELECTION'

[B] 'DETAILED LOG DISPLAY SELECTION'

[C]

```
+-------------------------------------------------------+
|                SPIL CHECK LOG DISPLAY                 |
|                                     PAGE: 0001        |   Common
|                                                       |   Area
| LAST ERASE DATE:_____ FIRST LOG:_____ LAST LOG:_____  |
| LOG COUNT:__              LAST REF.CODE: _________ __ |
|                                 +-------------------+ |
| REFERENCE CODE:    __(A)__      |                   | |
|                                 |                   | |
| SEQ.NUMBER:(B)_ LOG COUNT:(C)   |        (E)        | |   Specific
|                                 |                   | |   Area
| DATE: __(D)___                  |                   | |
|                                 +-------------------+ |
|                                                       |
|                                 PRESS ENTER FOR NEXT LOG |
| SELECTION:                                            |
|                                                       |
+-------------------------------------------------------+
```

(A) This reference code corresponds to the data displayed in the specific area.

(B) This is the sequence number of this specific reference code (A) .

(C) If one and the same reference code came up more than once, only the count is updated. This shows how often the same error occurred.

(D) The date when the reference code (A) occurred.

(E) Hardware data to be used in case of support.

IML Log Display

Log Handling - Actions

Prerequisites:

- Control diskette or diagnostic diskette inserted.

How to Select the Log

1. Call M/S PROGRAM SELECTION.
   Hold down ALT key and press DIAG key. [A]
2. Key in selection for 'DETAILED LOG DISPLAY', press ENTER. [B]
3. Key in the selection for 'IML LOG', press ENTER. [C]

How to Terminate the Log Display

1. Press ALT key and hold and press DIAG key. The 'IBM MAINTENANCE AND SERVICE PROGRAM SELECTION' is displayed on screen.

Log Handling - Results

Screen displays:

[A] 'IBM MAINTENANCE AND SERVICE PROGRAM SELECTION'

[B] 'DETAILED LOG DISPLAY SELECTION'

[C]

```
+-------------------------------------------------------+
|                                                       |
|                   IML LOG DISPLAY                     |
|                                                       |
| LAST ERASE DATE:_____ FIRST LOG:_____ LAST LOG:_____  |
| LOG COUNT:_____          LAST REF.CODE: _______       |
| +-----------------------------------------------+     |
| |                                               |     |
| |                                               |     |
| |                    (D)                        |     |
| |                                               |     |
| |                                               |     |
| |                                               |     |
| +-----------------------------------------------+     |
|                                          +---------+  |
| SELECTION: . L=LAST LOG, P=PRECEDING LOG, |M=MOST   |
|                                          |FREQUENT|  |
|          (A)        (B)        (C)       +---------+  |
|                                                       |
+-------------------------------------------------------+
```

Common Area

Specific Area

Explanation of the specific area:

(A) By entering 'L' the hardware data in the specific area (D) belong to the last log.

(B) By entering 'P' the hardware data in the specific area (D) belong to the log before the last one.

(C) By entering 'M' the hardware data in the specific area (D) belong to the most frequent log.

(D) Hardware data for use in case of support.

Last Detailed Log Display

Log Handling - Actions

Prerequisites:

- Control diskette or Diagnostic diskette inserted (see Note).

How to Select the Log

1. Call M/S PROGRAM SELECTION.
   Hold down ALT key and press DIAG key. [A]
2. Key in selection for 'LAST LOG DISPLAY', press ENTER. [B]

How to Terminate the Log Display

1. Press ALT key and hold press DIAG key. The 'IBM MAINTENANCE AND SERVICE PROGRAM SELECTION' is displayed on the screen.

Note: On the diagnostic diskette alog is recorded only for Power, SP machine check, SPIL program, and IML.

Log Handling - Results

Screen displays:

[A] 'IBM MAINTENANCE AND SERVICE PROGRAM SELECTION'

[B] The picture now displayed on screen is showing the last detailed log that occurred.

ATTENTION!
When you select the LAST LOG DISPLAY and you get '2**' displayed, it indicates that the last log that had occurred has been erased before.

If the last log was a reference code log with no detailed log area, the LOG DISTRIBUTION STATISTICS are displayed.

Communication adapter (CA) unit check logs and ambient recording logs cannot be displayed with last log selection.

Integrated Reference Code Analysis (IRECA)

Purpose

The Integrated Reference Code Analysis program will assist the 4331 CE on his way through the MAPs. It will minimize the time required to determine the failing FRU. It also allows immediate and simple update of the decision tables.

Restrictions

The IRECA program analyses only reference codes which lead to the analysis result without the need for manual intervention, for example: it is not possible to respond to questions. It also requires a functional 4331 Support Processor for execution. Reference Codes other than the Last Log reference code must be typed in manually.

Warning:
- Results may be wrong if the reference code or symptom code is entered incompletely, or if the refcode entered was not generated by this machine.
- In case of multiple SYMPTOM Codes enter only one at a time together with the refcode.

Screen Layout

The 20 basic lines of the screen display are arranged as follows:

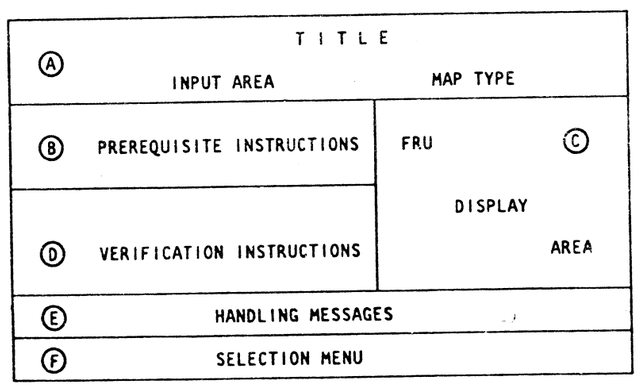

(A) This field shows the title of the selection, the MAP number and FIX number, and two input fields for the reference code and symptom code if available.

(B) This field informs you about the necessary prerequisites. For example: logs which should be inspected first or tests which should run first.
Instructions in this field must be executed before any FRU is replaced.

(C) This field lists all suspected FRUs in their sequence of priority. Only 10 FRUs can be displayed in one frame. Press ENTER to display the next frame. All input fields are locked in this case until all FRUs have been displayed.
Only the FRUs which are physically installed in this machine are displayed.

(D) This field tells you how to proceed after FRU replacement. If not otherwise instructed go to the Exit MAP 0001.

(E) This field may display additional messages.

(F) This field lists the PF-selections available for this screen.

Example of an IRECA Display

```
                    INTEGRATED REFERENCE CODE ANALYSIS

 REFERENCE CODE:   F2028001        (SYMPTOM CODE):   ........

 *** PREREQUISITE INSTRUCTIONS: ***      MAP: F200   FIX: 1004

CHECK TOP CONNECTORS OF SUPECTED FRUS.   SUSPECT:...
BEFORE FRU REPLACEMENT GO TO ENTRY POINT
B of MAP F200.                            1. CARD   01A-A2T2
                                          2. CARD   01A-C2D2
                                          3. CARD   01A-C2E2
 *** VERIFICATION INSTRUCTIONS ***        4. CARD   01A-C2F2
                                          5. CARD   01A-C2G2
                                          6. CARD   01A-C2H2
                                          7. CARD   01A-C2J2
                                          8. CARD   01A-C2C2
                                          9. CARD   01A-C2B4
  A->MORE...  (PRESS ENTER)              10. CARD   01A-A2R2
                          ===> CHECK THE INFO-BOX <===
PF1 = IRECA  PF2 = INFOBOX  PF3 = REF-UPDATE  PF4 = FRU-UPDATE  PF5 = MSG-UPDATE
 MAN                 4MB VSE TIMER: ON              DATA: 0000   ADDR: 000000
                         TOD: SEC
A00C
```

(A) MORE... = Indicates that not all suspected FRU's are displayed. Press Enter to display next screen with the remaining FRU's.

Integrated Reference Code Analysis (continued)

Prerequisites

1. IML must be completed, if not, perform IML with the control diskette (FU1) or diagnostic diskette 1 (DD1) inserted.

2. Insert the diagnostic diskette which contains the IRECA program. This is diskette DD1 for Model 1 and DD2 for Model 2.

How to Select IRECA

1. Call the 4331 MAINTENANCE/SERVICE PROGRAM SELECTION.
   Select REFCODE ANALYSIS.
   Read the handling instruction displayed, then press ENTER to get the basic IRECA display. This display shows in the bottom line the selection menu for the IRECA program. The selections are assigned to PF-keys as follows:

   PF1 = IRECA PF2 = INFOBOX
   PF3 = REF UPDATE PF4 = FRU UPDATE
   PF5 = MSG UPDATE

2. If the message:
   CHECK THE INFO-BOX
   appears press PF2 and read the information in the info-box. It might be important for this repair action. Return to IRECA via PF1.

3. Type in the reference code and - if required - the symptom code as received from log, test, or MAP. If there is more than one SYMPTOM Code, enter only one at a time together with the reference code.

4. Press ENTER.
   Note: If a last log was stored since the last IML steps 3 and 4 are executed automatically after step 1.

5. Follow the instructions displayed under PREREQUISITE INSTRUCTIONS.

6. Replace the FRUs in the listed sequence (1..n). If more than 10 FRUs are in the SUSPECT list the message MORE ... is displayed. Press ENTER to continue the FRU display. In this case all input fields are locked until all FRUs are displayed.

7. Follow the VERIFICATION INSTRUCTIONS or return to the EXIT MAP 0001 if not told otherwise.

8. Note down your activities in the INFO-BOX.

Selection Menu

The PF-keys listed in the bottom line allow you to select another IRECA function. No further selections are available for this display.

Messages

Message	Reason
THIS REFERENCE CODE IS UNKNOWN. PLEASE CHECK YOUR INPUT!	This reference code is unknown to the IRECA program. Check for typing errors. If input was correct invoke your support structure.
THIS SYMPTOM CODE IS UNKNOWN. PLEASE CHECK YOUR INPUT!	This symptom code is unknown to the IRECA program. Check for typing errors or missing input. If input was correct invoke your support structure.
===> CHECK THE INFO-BOX <===	There is at least one letter in the INFO-BOX. Press PF2 to display the letters.
MORE... (PRESS ENTER)	There are more FRUs to be displayed. Press ENTER to scroll.
*** FEATURE NOT INSTALLED ***	This reference code is known but the hardware is not installed in this machine. Check for correct diskette, the diskette used for IML is not correctly configured. Refer to MAP FE90.
*** DISKETTE ERROR ***	An unrecoverable diskette error was detected. Try again with another diskette. If error persists use the 53FD diagnostics for problem analysis.

IRECA - Info Box Selection

Screen Layout

Example of an Info Box Letter

```
                    INTEGRATED REFERENCE CODE ANALAYSIS
                              *** INFO-BOX ***
            THIS IS NUMBER 01 OF 04 LETTERS IN THE INFO-BOX.

   IT IS FROM C.BROWN......... DATED 11/07/80 FOR REFERENCE CODE F2028001.

===> THE ERROR IS HIGHLY INTERMITTENT! TODAY I REPLACED FRUS 1
     THROUGH 5. IF ERROR PERSISTS CHANGE NEXT 5.
                                                                    <===


PF1 = IRECA  PF2 = INFOBOX        PF6 = WRITE A LETTER   PF7 = ERASE THIS LETTER
```

Purpose

The INFO-BOX is intended to serve the CE as a reminder stored on the diskette. Its main usage will be on intermittent errors or deferred maintenance when it is necessary to leave information for the same or another CE on a particular problem. The info box can hold up to ten letters.

How to Call the Info-Box

1. Select REFCODE ANALYSIS from the MAINTENANCE AND SERVICE PROGRAM selection menu.
2. Press PF2 key to select INFO BOX
3. After selection the first (oldest) letter is automatically displayed. Pressing the ENTER key will scroll the display to the next letter. When no more letters are stored the display will wrap back to the first letter.

Selection Menu

The selection menu is displayed in the bottom line. Two additional subselections and a scroll function are available for this selection.

PF6 = Write a letter
PF7 = Erase this letter

ENTER = scroll to next letter

How to Write a Letter

Press PF6 to write a letter. The program will unprotect the input area (224 characters) between the symbols ===> and <===. Any text may now be written. The letter will be stored by pressing the ENTER key. Then the program switches back immediately to display mode.

How to Erase a Letter

Display the letter to be erased. Press PF7 to erase this letter. The remaining letters will automatically close the gap and the freed space is now available for a new letter. Then the program switches back to display mode.

Messages

Message	Reason
** THE INFO-BOX IS FULL, ERASE A LETTER BEFORE YOU WRITE A NEW ONE **	Press ENTER until the letter is displayed you want to erase. Press PF7 to erase the letter.
THE LETTER IS STORED	Prompting message
THE LETTER IS ERASED	Prompting message

IRECA Update - Introduction

Three selections are available to call the update program for the Reference Code-, the FRU-, and the Message-Table of the IRECA program.

Each selection has its own subselection menu. This menu can be selected by entering a question sign (?).

When an update program is selected the first screen displayed shows subselection D = Display as default in the SELECT MODE field.

An update would require the entering of A as select mode followed by ENTER, see also the individual descriptions.

The erase selections allow only to erase manually entered updates. It is not possible to erase basic entries of the IRECA program.
To erase an update the respective reference code, the FRU - number or the message number must be entered followed by pressing ENTER.

IRECA - Reference Code Update Selection

Screen Layout

Example of a Refcode Update Input

```
                    REFERENCE CODE UPDATE FUNCTION


    REFERENCE CODE: F2028001                    (SYMPTOM CODE): ........

    MAP BLOCK NUMBER: F200    FIX: 1005

    FIX MESSAGES: P017 PNEXT P019 OMAP V018 M0001

    FRU NUMBERS: 014 015 016 017 038 042 182 183 210 211 ...
                 ... ... ... ... ... ... ... ... ... ... ...
                 ... ... ... ... ... ... ... ... ... ... ...


    SELECT MODE: D          ? = MENU                        KEY:

PF1 = IRECA  PF2 = INFOBOX  PF3 = REF-UPDATE  PF4 = FRU-UPDATE  PF5 = MSG-UPDATE
```

Purpose

The REFERENCE CODE UPDATE function allows to delete, alter, or add reference code and/or symptom code definitions together with their message and FRU assignment. All updates are developed by Engineering and distributed via the support structure. They are protected against accidental misusage and typing errors by a key given in the update instruction.

The update information in the data bank may be accessible from the 4331 and stored onto the DD1 or DD2 diskette by using the REMOTE SUPPORT FACILITY (RSF). Once it has been stored on the diagnostic diskette it can be retrieved and used to update the reference code and/or symptom code tables by using the REF-CODE FIX DISPLAY program.

How to Call the Refcode Update Program

1. Call the MAINTENANCE AND SERVICE PROGRAM SELECTION and select REFCODE ANALYSIS, press ENTER.

2. Press PF3 Key to select REF-UPDATE.
   After selection the REFERENCE CODE UPDATE FUNCTION screen appears with the default selection D for DISPLAY REFCODE UPDATE in the selection field.

Selection Menu

There are four subselections available. The selection menu can be displayed by entering a '?' behind SELECT MODE.
The available selections are:

A = ALTER A REFERENCE CODE
D = DISPLAY REFERENCE CODE UPDATES
E = ERASE ONE SELECTED UPDATE
F = ERASE ALL UPDATES

The REFCODE UPDATE menu is displayed whenever an invalid selection was done.

How to Enter a Refcode Update

1. Enter subselection 'A' for ALTER and press ENTER.

2. Type in the variables as received from the support function.
   IMPORTANT: Type in the 4-digit key. This key will not be displayed.

3. Press ENTER to store the variables. The update is available now.

How to Update via RSF

Refer to page 4516 'Temporary Storage and Display of Data Bank Information', and page 4517 'How to Install a IRECA Update or MCTF Received from the Data Bank'.

Messages

Message	Reason
ENTER REF.CODE (AND SYMPTOM CODE)..	Subselection D entered for DISPLAY. Enter info to display the wanted update. Default: displays all updates.
	Subselection E entered for ERASE. Enter info for the update to be erased. No default available.
ALTER NOW...	Subselection A entered for ALTER. Key in the complete update received from the support function.
** INCORRECT KEY **	There is a typing error.
** PARAMETER MISSING OR INVALID **	- MAP, or FIX missing. - FIX not numeric. - Wrong message parameter. (Cursor points to the beginning of the incorrect field.)
** INVALID NUMBER (NOT 0..254) **	Wrong FRU number. (Cursor points to the beginning of the incorrect field.)
** INVALID REFERENCE/SYMPTOM CODE **	- Refcode missing. - Refcode/symptom not hex or characters other than . X or blank.
** UPDATE AREA OVERFLOW **	Get diskette with higher level.
** DISKETTE ERROR **	An unrecoverable diskette error was detected. Try again with another diskette. If the error persists use the 53FD diagnostics for problem analysis.
** UPDATE NOT FOUND **	May occur during DISPLAY or ERASE.
** UPDATE COMPLETED **	The update was correctly stored.
UPDATE IN PROCESS...	Wait for completion.
** SORRY, NO UPDATE STORED **	In response to selection DISPLAY.
** ALL UPDATES DISPLAYED **	End of the updates was reached.
** UPDATE ERASE COMPLETED **	After ERASE or ERASE all.
==> TO ERASE PRESS PF9 <==	Prompting stop.

IRECA - FRU Update Selection

Screen Layout

Example of a FRU Update Input

```
                        FRU UPDATE FUNCTION

.......................................................................
........................ (handling instructions) ......................
.......................................................................

        FRU NUMBER: 093
                                                  (FROM)  (TO)
        FEATURE 1: 2C8080   TYPE: CARD.   LOCATION: A C2M2.. . ......

        ================ ONLY IF EXCLUSIVE FEATURES: ==============

        FEATURE 1: 2C4040   TYPE: CARD.   LOCATION: A C2M2.. . ......
        FEATURE 1: 2C2020   TYPE: CARD.   LOCATION: A C2M2.. . ......


    SELECT MODE: D          ? = MENU                        KEY:

PF1 = IRECA  PF2 = INFOBOX  PF3 = REF-UPDATE  PF4 = FRU-UPDATE  PF5 = MSG-UPDATE
```

Purpose

The FRU UPDATE FUNCTION provides facilities to add, delete, and alter any FRU definition. All updates are developed by Engineering and distributed via the support structure. They are protected against accidental misusage and typing errors by a key given in the update instruction.

The update information in the data bank may be accessible from the 4331 and stored onto the DD1 or DD2 diskette by using the REMOTE SUPPORT FACILITY (RSF). Once it has been stored on a diagnostic diskette of your system, it can be retrieved and used to update the FRU tables by using the REF-CODE FIX DISPLAY program.

How to Call the FRU Update Program

1. Select REFCODE ANALYSIS from the MAINTENANCE AND SERVICE PROGRAM selection menu.

2. Press PF4 key to select FRU-UPDATE.
   After selection the FRU UPDATE FUNCTION screen appears with the default selection D for DISPLAY FRU-UPDATE in the selection field.

Selection Menu

There are five subselections available. The selection menu can be displayed by entering a '?' behind SELECT MODE.
The available selections are:

A = ALTER A FRU
C = DISPLAY ALL FRU ENTRIES
D = DISPLAY FRU UPDATES
E = ERASE ONE SELECTED UPDATE
F = ERASE ALL UPDATES

The FRU UPDATE menu is displayed whenever an invalid selection was done.

How to Enter a FRU Update

1. Enter subselection 'A' for ALTER and press ENTER.

2. Type in the variables as received from the support function.
   IMPORTANT: Type in the 4-digit key. This key will not be displayed.

3. Press ENTER to store the variables. The update is available now.

How to Update via RSF

Refer to page 4516 'Temporary Storage and Display of Data Bank Information' and page 4517 'How to Install a MCTF or IRECA Update Received from the Data Bank'.

Messages

Messages	Reason
** ENTER THE WANTED FRU NUMBER **	Subselection D entered for DISPLAY. Enter FRU number to display the correct update. Default: Display all updates.
	Subselection E entered for ERASE. Enter FRU number for the update to be deleted. No default.
ALTER NOW...	Subselection A entered for ALTER. Key in the complete update received from the support function.
** INCORRECT KEY **	There is a typing error.
** PARAMETER MISSING OR INVALID **	- Update incomplete - Non hex in feature field - Invalid type - Invalid location (Cursor points to beginning of the incorrect field.)
** INVALID NUMBER (NOT 0..254) **	Wrong FRU number. (Cursor points to beginning of the incorrect field.)
** UPDATE AREA OVERFLOW **	Get diskette with higher level.
** DISKETTE ERROR **	An unrecoverable diskette error was detected. Try again with another diskette. If the error persists use the 53FD diagnostics for problem analysis.
** SELECTED UPDATE NOT FOUND **	May occur in response to selection DISPLAY or ERASE.
** UPDATE COMPLETED **	The update was correctly stored.
UPDATE IN PROCESS...	Wait for completion.
** SORRY, NO UPDATE STORED **	In response to selection DISPLAY.
** ALL UPDATES DISPLAYED **	End of the updates was reached.
** UPDATE ERASE COMPLETED **	After ERASE or ERASE ALL.
==> TO ERASE PRESS PF9 <==	Prompting stop.

IRECA - Message Update Selection

Screen Layout

Example for a Message Update Input

```
                        MESSAGE UPDATE FUNCTION



     MESSAGE NUMBER: 047    TEXT: CHECK: READ OPERATION ATTEMPTED
                                  ON A BLANK TAPE. ................
                                  ................................



                                  ALTER NOW ...


    SELECT MODE: A          ? = MENU                        KEY:

PF1 = IRECA  PF2 = INFOBOX  PF3 = REF-UPDATE  PF4 = FRU-UPDATE  PF5 = MSG-UPDATE
```

Purpose

The MESSAGE UPDATE FUNCTION will add, delete, or alter any message(s) to be displayed, either in the PREREQUISITE INSTRUCTIONS or the VERIFICATION INSTRUCTIONS areas. All updates are developed by Engineering and distributed via the support structure. They are protected against accidental misusage and typing errors by a key given in the update instruction.

The update information in the data bank may be accessible from the 4331 and stored onto the DD1 or DD2 diskette by using the REMOTE SUPPORT FACILITY (RSF). Once it has been stored on a diagnostic diskette of your system, it can be retrieved and used to update the message tables by using the REF-CODE FIX DISPLAY program.

How to Call the Message Update Program

1. Select REFCODE ANALYSIS from the MAINTENANCE AND SERVICE PROGRAM selection menu.

2. Press PF5 key to select MSG-UPDATE.
   After selection the MESSAGE UPDATE FUNCTION screen appears with the default selection D for DISPLAY MESSAGE UPDATES in the selection field.

Selection Menu

There are four subselections available. The available selections are:

A = ALTER A MESSAGE
D = DISPLAY MSG UPDATES
E = ERASE ONE SELECTED UPDATE
F = ERASE ALL UPDATES

The FRU UPDATE menu is displayed whenever a invalid selection was done.

How to Enter a Message Update

1. Enter subselection 'A' for ALTER, press ENTER.

2. Type in the update data as received from the support function.
   IMPORTANT: Type in the 4-digit key. This key will not be displayed.

3. Press ENTER to store the update. The update is available now.

How to Update via RSF

Refer to page 4516 'Temporary Storage and Display of Data Bank Information' and page 4517 'How to Install a MCTF or IRECA Update Received from the Data Bank'.

IRECA - Message Update Selection (continued)

Messages

Message	Reason
** ENTER THE WANTED MESSAGE NUMBER **	Subselection D entered for DISPLAY. Enter the number of the message you want to display. If no number is entered all updates are displayed starting with the first one entered.
	Subselection E entered for ERASE. Enter the number to be erased.
ALTER NOW...	ALTER mode selected. Input fields are now unprotected to accept update data.
** INCORRECT KEY **	Typing error.
** PARAMETER MISSING OR INVALID ** .	Message missing.
** INVALID NUMBER (NOT 0..127) **	Wrong message number (Cursor points to begin of field).
** UPDATE AREA OVERFLOW **	Get diskette with higher level.
** DISKETTE ERROR **	An unrecoverable diskette error was detected. Try again with another diskette. If the error persists use the 53FD diagnostics for problem analysis.
** SELECTED UPDATE NOT FOUND **	May occur in response to selection DISPLAY or ERASE.
** UPDATE COMPLETED **	The update was correctly stored.
UPDATE IN PROCESS...	Wait for completion.
** SORRY, NO UPDATE STORED **	In response to selection DISPLAY.
** ALL UPDATES DISPLAYED **	End of the updates was reached.
** UPDATE ERASE COMPLETED **	After ERASE or ERASE ALL.
==> TO ERASE PRESS PF9 <==	Prompting stop.

This page has been
intentionally left blank

System Test 4300 (ST4300) and OLTSEP

Introduction for ST4300

The ST4300 is a stand-alone test to be used as system test on 4300 Processors. The ST4300 is basically an ST-370 with enhancements to cover especially the 4300 Processor with 0.5 MB. The main purpose is to test the interface and the interaction of the attached devices.

For US only the ST4300 has to be ordered through the DOC (Diagnostic Order Calculator) and is supplied by the PID (Program Information Department). For WT follow local ordering procedure. It is written either on tape or disk along with other diagnostic programs (OLTs). Starting with EC 366453 (Mod-1/2) the ST4300 is also available on a separate diskette - the System Test Diskette (labelled 'Diag 5'). The ST370 User's Guide (D99-0370A) supplied with the ST4300 is still valid but the deviations described here for handling and supported devices, must be obeyed.

Enhancements of the ST4300 via ST-370

- 3278 and 3287 will configure and be tested as a 3270.
- 3310, 3340 natively attached, 3370, and 8809 will configure and be tested.
- The 4331 customer diskette will configure and be tested as 3540.
- The 4331 CA lines will only be configured by the ST4300.
- The loop attached devices will only be configured (if powered up). Neither the adapter nor the devices are tested by the ST4300.
- The ST4300 is also capable to test 3310/3370 disks in 23XX or 33XX emulation mode, but it requires that the disks are initialized by the customer as 'count-key-data' devices. The test can also be applied if the disk device is used in mixed mode. For example: One 2314 volume on a 3310 disk and the remaining part in FBA mode. Obey the limitations for the ST4300 diskette version described at the end of this subject.
- Any emulated CKD-disk (minidisk) can not be tested. The corresponding device address should be dropped.

How to Load the ST4300

Loading from Diskette

1. Make all devices to be tested 'ready'.

2. If the system is not running, perform IML from the control diskette 1 (FU 1). After IML complete the PROGRAM LOAD picture appears on the screen, proceed with step 4.

3. If the system is running, check that you are in the correct mode to run ST4300:
   Call MODE SELECT picture, enter L, press ENTER. This selection displays the PROGRAM LOAD picture with the input from the previous load operation.

4. Check and if necessary correct the following specifications:

   - PROGRAM RESET = CLEAR (C)

   - MACHINE MODE = 370 (3)

   - STORAGE SIZE = REAL (R)

   - 1052 MODE = specify one of the following:

     PRINT (P) - Printer Keyboard Mode (see Note below).
     Verify that the hardcopy device is 'ready'. If no hardcopy device is available or if it is used for other than console message printing specify:

     NO PRINT (N) - Printer Keyboard Mode (see Note below).
     The 1052 mode will then use the screen as the only means for message output.

     OFF (F) - 3270 Operation Mode

     Note: If you are in 1052 mode (Printer Keyboard Mode) the keyboard is normally locked. It is freed by an read inquiry command which is invoked by pressing the REQ key. Any message can now be entered followed by pressing ENTER.

   - NUMBER OF 3340 BUFFERS = 1
     Only necessary if 3340/44 is directly attached at the FTA, otherwise leave field empty.

   - NUMBER OF EMU BUFFERS = 1
     Only necessary if the compatibility feature is installed, otherwise leave field empty.

     Note on Number of Buffers: If necessary only one buffer should be specified to save MS-space. If MS-size available is too small (especially on 0.5 MB machines) ST4300 cannot be loaded. This results in the following message: INSERT CONTROL DISKETTE, PRESS MODE SELECT, DO CLEAR RESET AND TRY AGAIN, INVALID MSD ENTRY. To follow this message would force you in a permanent loop.

   - Leave all other specifications unchanged. Verify that the load device specified by CHANNEL - CONTROL UNIT - DEVICE is ready, press ENTER.

System Test 4300 (ST4300) and OLTSEP (continued)

Loading from Diskette (continued)

5. Call MODE SELECTION picture, select CLEAR RESET (C), press ENTER. Wait until RESET COMPLETE appears on screen.

6. Call M/S PROGRAM SELECTION.

7. Select ST4300 (E), press ENTER. The display LOADER FOR SYSTEM AND I/O TESTS appears on screen.

8. Execute steps indicated on screen:
   - Insert diskette with system and I/O tests (diskette is labelled DIAG5)
   - Type in 'S', press ENTER.

   The load process is indicated by the message:
   - LOAD IN PROCESS
   - VERIFY IN PROCESS
   - LOAD DONE

9. Execute steps 4 to 7 indicated on the screen:
   - Insert functional diskette (FU 1).
   - Select customer manual operations, press MODE SEL.
   - Do PROGRAM RESET, wait until RESET COMPLETE appears on screen.
   - Do RESTART.

10. After the restart is executed the processor enters wait state X'FF01'. This and the following wait states can be displayed on the screen in the data field of line 21 if you press the STOP key. To proceed press the START key.

11. Continue with step 10 of the 'Loading from Tape' description.

Loading from Tape

1. Make all devices to be tested 'ready'.

2. Mount the ST4300/OLTSEP tape (file protected) and make loader device 'ready'.

3. Perform steps 3 and 4 of the 'Loading from Diskette' description. Then proceed here.

4. When the PROGRAM LOAD picture disappears from screen, press STOP key at the console keyboard.

5. Rewind the ST4300/OLTSEP tape to the load point and make the device 'ready' again.

6. Call MODE SELECTION picture, type in DM84, press ENTER. Alter MS-locations 84 and 85 to X'4300', press ENTER.

7. Call MODE SELECTION picture again, select PROGRAM LOAD (L).

8. Alter reset field to PROGRAM (P). Leave all other specifications unchanged, press ENTER.

9. After IPL is executed the processor enters wait state X'FF01'. For how to display wait state, see step 10 of ' Loading from Diskette'.

10. Force an interrupt on the message output device (press STOP/START on the printer). A 3287 console printer cannot be used as message output device. The operator console (3278-2A or 3279-2C) can only be used as message output device, if in 1052 mode. If a 3278-02 is the message output device, the instruction printout stops when the screen is full. To continue press ENTER on the output device keyboard.
    This interrupt forces an instruction printout on the just assigned output device. Read these instructions carefully before you continue testing. Read all references to the ST370 as ST4300.
    To stop or bypass the instruction printout read the messages in the instruction printout.
    Note: If the output device specified is a line printer wrong characters are printed if the UCS buffer has not been loaded with the correct chain image.
    reload the UCS buffer. This however is only possible at or after wait state 'FF04'. Load the UCS buffer by entering:

    UCS CUU TT

    where CUU = printer address, for example 02E
    TT = chain image code (depending on printer type), see table.

Printer	TT Value
1403	AN, RN, PN, HN, YN, SN, TN, QN, XN, PH (PCS-HN), PA (PCS-AN), QC (QNC), OD (ODA), ON (ONA)
3203	PCSAN, PCSHN, AN2, HN2, PN2, QN2, RN2, SN2, TN2, QNC, XN2, ODA, YN2
3211	AE (A11), GE (G11), HE (H11), PE (P11), TE (T11)
3262	48C, 52C, 63C, 64C, 96C, 116C, 128C
3289	48C, 64C, 96C, 116C, 128C

Loading from Tape (continued)

Printout Example

```
  ST4300 .  RELEASE 12.0
 ASM DATE=01/13/81, TIME=09.59
MODEL 4331,SER 20367,856K

        EXTD  FL PT,MVM INST,DECML
        FETCH AND STORE PRT,TMR,370 INST,TOD
        MONITOR CALL,CPU TIMER,EC,DAT

TO BYPASS INSTRUCTION PRINTOUT ENTER -BYPASS- NOW

TO STOP INSTRUCTION PRINTOUT PRESS EXTERNAL INTERRUPT
**NOTE** ENTERING ONLY 1ST LETTER OF MESSAGES IS NO LONGER VALID
```

11. When the printout is finished the processor enters wait state X'FF02'. This is indicated at the end of the instruction printout together with the message INTERRUPT FROM INPUT DEVICE, WAIT FOR READY MSG. TO PROCEED ENTER GO. The interrupt has to be given by pressing ENTER if in 3270 Mode or the REQ key if in 1052 Mode. In response READY is displayed on the screen. Respond with typing in GO and press ENTER.

12. The message PRECONFIGURATION STARTED is printed and after a short delay all available I/O addresses are printed out, and the processor enters wait state X'FF03'.

Preconfiguration Printout

```
          TABLE OF I/O ADDRESSES
       TO BE CONFIGURED ON THIS SYSTEM

011    015    017    01E    02D    02E    200
220    221    230    231    232    233    240
241    243    300

ENTER DROP CUU OR CNFG MESSAGE NOW.
WAIT CODE FF03.

CNFG                                  ENTERED
CONFIGURATION STARTED
```

13. Any unit can be left unconfigured by the DROP CUU message (or DROP CUU CUU or DROP CUU-CUU or multiple combinations). After READY the DROP message prints another table of I/O addresses for a further check. When configuration is proper, type in the message CNFG (all four letters, not just C). The unit availability table (UAT) is then printed and the next wait state is entered (FF04).

Configured Devices

```
          UNIT AVAILABILTY TABLE

UNIT   UNIT   ADDRESS   TEST
TYPE   CLASS     CUU    LEVEL FEATURES
3270    GD     000011    0
3270    GD     000015    0
3270    GD     000017    0
3270    GD     00001F    *    INPUT DEV.
2540    PU     00002D    0    COL BIN
1403    PR     00002E    0    132 POS
3340    DS     000200    0    VOL ID CEPACK MOD 35
3370    DS     000220    0    MODEL 00
3370    DS     000221    0    MODEL 00
3370    DS     000230    0    MODEL 00
3370    DS     000231    0    MODEL 00
3370    DS     000232    0    MODEL 00
3370    DS     000233    0    MODEL 00
3310    DS     000240    0    MODEL 00
3310    DS     000241    0    MODEL 00
3310    DS     000243    0    MODEL 00
8809    TP     000300    0    MOD 0,9 TRK

CONFIGURATION COMPLETE
TEST LEVEL  *  INDICATES DEVICE NOT TESTED
WAIT CODE  FF04

TO PROCEED ENTER GO
```

14. If the configuration is correct, the operator responds to message 'TO PROCEED PRESS INTERRUPT OR TYPE GO'. Relevant I/O tests are loaded followed by the ST4300 Test Control Program. ST4300 is now ready to perform its main function, as printed in a three-line message. Wait state (FF05) is entered, and the following messages or options (also indicated on the machine instruction printout) should be considered:

- Various assign messages (input, output, retain, and set clock).
- Vary test level (see ST4300 Test Levels).
- Enter run options.
- Other messages (write CUU, print, and tapemark CUU).

System Test 4300 (ST4300) and OLTSEP (continued)

15. When no further action is required on the preceding messages the operator must press the console INTERRUPT or type GO. System test responds with RUN STARTED, and runs the various tests. Display screens will show ST4300 running via a timer (elapsed time).

Note: For a more detailed explanation of ST4300, see ST370 User's Guide, D99-0370A.

Log Report

This is an example of a possible printout at test end.

```
        REPORT 04 0002 MIN, 55 SEC
          CLOCK  68/144/03/46/05
          BLOCKS OPERATED FAILED

  CPU
FIXED PT 000999  000000
FLOAT PT 000998  000000
DECIMAL  000998  000000
SP TEST  000998  000000
MVM TEST 000998  000000

  I/O    001055  000028

  I/O UNITS       BLOCKS    ACUM  NOT       TEST
ADDRESS  CLAS  OPER  FAIL  STAT  RDY  RDY  LEVEL

000011    GD   0038  0028  0E00              0        CE, DE, UCK
000015    GD   0040  0000                     0
000017    GD   0039  0000                     0
00001F    GD   0000  0000                     *
00002D    PU   0053  0000                     0
00002E    PR   0431  0000                     0
000200    DS   0272  0000                     0
000220    DS   0018  0000                     0
000221    DS   0018  0000                     0
000230    DS   0018  0000                     0
000231    DS   0018  0000                     0
000232    DS   0018  0000                     0
000233    DS   0018  0000                     0
000240    DS   0018  0000                     0
000241    DS   0018  0000                     0
000243    DS   0018  0000                     0
000300    TP   0020  0000                     1

TEST LEVEL * INDICATES DEVICE NOT TESTED
```

Devices Supported by the ST4300 Diskette Version

The diskette version of ST4300 does not support all devices that the tape version does. Following is a list of all devices supported by the diskette version.

Direct Access Storage Unit
2311, 2314, 2321, 3310, 3330, 3340, 3344, 3350, 3370, 3375, 3380, 3540.

Display
3270, 3274

Banking Machine
1419, 3890

Printer
1403, 1443, 3203, 3211, 3262, 3289, 3800.

Reader/Punch
1442, 2520, 2540

Reader
2501, 3505

Punch
3525

Communication Controller
3705

Magnetic Tape Unit
2400, 2415, 2420, 3410, 3420, 8809

Keyboard
3200

Encoder
3848

Introduction to OLTSEP/OLTs

OLTSEP/OLTs

An OLT is a test written for a specific type of I/O device. Most OLTs are able to run in concurrent mode (OLTEP), but some must be executed under a stand-alone control program (OLTSEP). These are called Central Mode OLTs. Each device is usually supported by a series of OLTs, which contain a complete test for the device.
Some devices mainly older OCR and MICR devices require time-dependent testing for complete testing. Others such as two-channel switches may require precise control of the channels for certain tests. Devices with such requirements usually include some central mode OLTs in the devices OLTs package. These tests should be run under ST4300 and require the customer to give you the system.

OLTEP

OLTEP is a series of programs, one version for each Operating System with OLTEP support. Each OLTEP program supplies a link between the device tool (or OLT) and the Operating System chosen by the customer.

How to Load the OLTSEP/OLT s

Loading from Tape

Proceed according to OLTSEP User's Guide Form No. D99-SEPEC-03.

Loading from Diskette

1. Make all devices to be tested 'ready'.

2. If the system is not running, perform IML from Control diskette 1 (FU 1). After IML complete the Program Load picture appears on screen.

3. Call MODE SELECTION picture, select CLEAR RESET (C), press ENTER. Wait until RESET COMPLETE appears on screen.

4. Call M/S PROGRAM SELECTION.

5. Select ST4300 (E), press ENTER. The display LOADER FOR SYSTEM AND I/O TESTS appears on screen.

6. Execute steps indicated on screen:

   Insert diskette with system and I/O tests (diskette is labelled DIAG5).
   Type in 'TXXXX' (XXXX = device type), press ENTER.
   The load process is indicated by the message:
   LOAD IN PROCESS
   VERIFY IN PROCESS
   LOAD DONE

7. Execute steps 4 to 7 indicated on the screen:
   Insert functional diskette (FU 1)
   Select customer MANOPS, press MOD SEL.
   Do PROGRAM RESET, wait until RESET COMPLETE appears on screen.
   Do RESTART

8. Press ENTER.

9. OLTSEP is now functional. If your printer has the address 00E the following message is displayed:
   04 SEP188D ENTER DATE (AND TIME)-'MM/DD/YY, HH/MM/SS'.

   Note: Enter the date and time without the single quote ('), otherwise the message SYNTAX ERROR appears on screen.
   If wait code FF9002 occurs the console CDS (configuration data set) is incorrect. To continue, press ENTER on the desired input device. OLTSEP then autoconfigures that device. If OLTSEP cannot autoconfigure the device wait code FF990A occurs. For further operational information refer to the OLTSEP User's Guide.

- If the printer CDS is incorrect, you are prompted to enter the address and device type of the output printer as follows:

  Enter output device address and device type as follows:
  CUU-DDDD, where CUU = device address and DDDD = device type.

  Sample entry: 00E-1403

  After you enter the device address and device type OLTSEP continues as described in the OLTSEP User's Guide. If a problem occurs, enter blanks in response to the above request (results in wait code FF9906), and then refer to the OLTSEP User's Guide. Valid device types are:

  1403 3203 3262 3800
  1443 3211 3289

System Test 4300 (ST4300) and OLTSEP (continued)

How to Load the OLTSEP/OLT s (continued)

- One CDS is available for each of the following types of tape drives:

  2400 3410 3420

When you test a tape drive that has standard features, OLTSEP automatically creates a temporary (until the next IPL) CDS for that tape drive (you do not have to create a CDS via the CDSGEN function).

Standard Features CDS:

```
2400 - x'0000 8001 00 000000'
3410 - x'0000 8005 00 000000'
3420 - x'0000 8004 00 000000'
```

If the tape drive you want to test has no standard features you must use the CDSGEN function. The CDSGEN function gives you the choice of entering CDS information from the operator's console or from a reader. You are prompted to enter Y if you want to use the operator's console to create a temporary CDS. Enter the CDS information as shown below.

```
ddd mmmm cccc ffff oooo/

ddd  = device address
mmmm = model and feature code
cccc = class and type codes
ffff = flags
oooo = optional data (up to 37 bytes)
```

Example: 181 0000 8001 4400

For additional information see the CDSCEN function in the OLTSEP User's Guide.

- On Machines with less than 470K available main storage, the 3410 OLTS will not all fit. Also the 3420 OLTS will not fit.

  On those machines a subset of OLTS is loaded. If the operator attempts to run an OLT that is not in that subset he will be instructed to go to the diskette load screen and enter one of the following:

```
For 3410's
      T3410 --> Loads T3410A - 0
      T3412 --> Loads T3410P

For 3420s
      T3420 --> Loads T3420A  - CE
      T3422 --> Loads T3420CD - P
      T3424 --> Loads T3420   -
      T3426 --> Loads T3420ZA - ZB
```

Central Complex Test Selection

The following picture appears on screen when you select 'CENTRAL COMPLEX' from the 'IBM MAINTENANCE AND SERVICE PROGRAM SELECTION' picture.

The selection menu occupies two frames. The last selection (F) of the first frame calls the second frame.

To run one of the tests which are listed in this picture go to the respective test handling procedure on the following pages.

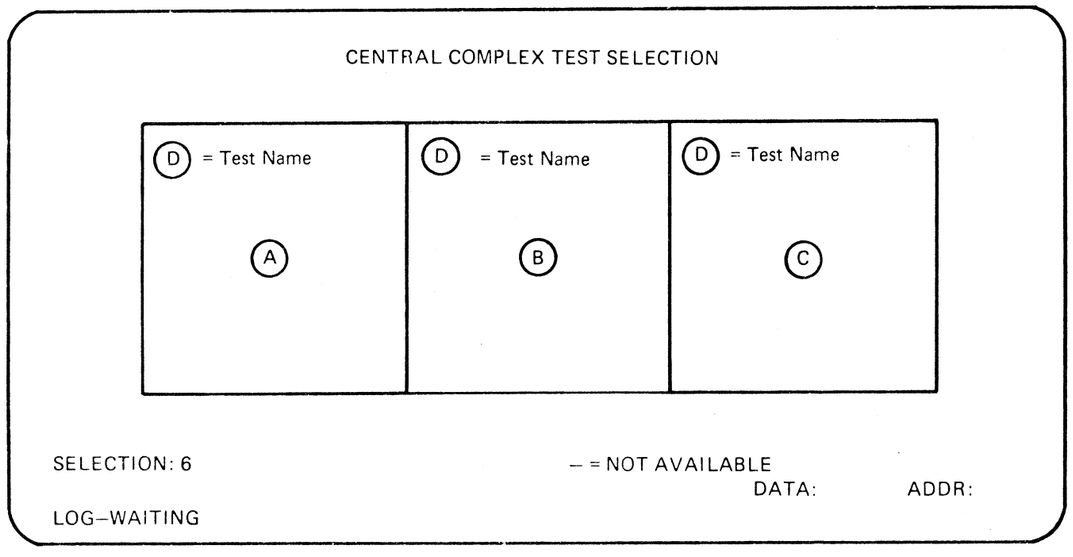

(A)(B)(C) Test names and selection codes

(D) The digits in front of the test name must be typed in behind the word SELECTION to select the appropriate test. A dash (-) instead of a digit indicates that the test is not available. (False diskette or wrong configuration).

Test Chaining Selection

Test Handling - Actions

Prerequisites:

- Power complete
- Diagnostic diskette inserted

How to Select the Test

1. Call M/S PROGRAM SELECTION.
   Hold down ALT key and press DIAG key. [A]
2. Select TEST CHAINING, press ENTER. [B]

How to Use the Test

After selection of 'test chaining' field (E) of the display shows all tests which run in default selection at this system.

Default selection causes all listed tests to be executed in the sequence indicated.

By varying the sequence number (F) tests can be excluded from execution or the sequence of execution can be changed, however, the tests with sequence number 0 and 1 cannot be changed or excluded.

For default run just press ENTER.
If you want to change the execution, alter the sequence number(s) and press ENTER. The next display will now list the tests in the requested sequence in field (E). At this point you can verify your selection. Press ENTER to start test chain or use PF 4 to return to picture [B]. A new selection is now possible.

How to Stop the Chaining Selection

The test chain is stopped automatically when all selected tests were executed error free, or the first error was detected in a test.

The test presenting the error can now be handled as described in the appropriate test description.

When a test chain was not completed and test chaining is selected again, the last chaining selection is repeated as default.

Test Handling - Results

Screen displays

[A] 'IBM MAINTENANCE AND SERVICE PROGRAM SELECTION'

Note: The test listing depends on the machine configuration. For example: The CA BA TEST is only listed if the communication adapter is physically installed.

[B]

```
+-------------------------------------------------------------------+
|                      TEST CHAINING SELECTION                      |
|                                                                   |
|  (A)  { SELECT THE TEST IN THE                                    |
|       { SEQUENCE TO BE EXECUTED,                                  |
|       { e. g. 2, 3, 4, 5, ETC.                                    |
|                                                                   |
|       FOR THE FIRST TIME SELECT                                   |
|       SBA-TEST UNTIL IC-BUS TEST                                  |
|       AS THE FIRST SEQUENCE STEPS.                                |
|                                                                   |
|  (B)  { A BLANK SEQUENCE NUMBER                                   |
|       { DESELECTS THE TEST.                                       |
|                                                                   |
|  (C)  { SEQUENCE NUMBERS MUST BE                                  |
|       { IN ASCENDENING ORDER.                                     |
|                                                                   |
+-------------------------------------------------------------------+
```

(E)
0 = SBA/SUPPORT BUS TEST
1 = PU-BSM TEST
2 = IC-BUS TEST
3 = BBA 0 TEST
4 = CA BA TEST
5 = FTA 1 TEST
6 = MPX ADAPTER TEST
7 = BMPX ADAPTER TEST
(F)

Examples:

	(A) The test sequence was changed.	(B) By deleting 4, all following tests are deleted.	(C) Some tests are deleted. For the remaining tests the sequence number has been changed.
First Display	0 = SBA/SUPPORT BUS TEST 1 = PU-BSM TEST 2 = IC-BUS TEST 7 = BBA 0 TEST 4 = CA BA TEST 6 = FTA 1 TEST 3 = MPX ADAPTER TEST 5 = BMPX-1 ADAPTER TEST	0 = SBA/SUPPORT BUS TEST 1 = PU-BSM TEST 2 = IC-BUS TEST 3 = BBA 0 TEST = CA BA TEST 5 = FTA 1 TEST 6 = MPX ADAPTER TEST 7 = BMPX-1 ADAPTER TEST	0 = SBA/SUPPORT BUS TEST 1 = PU-BSM TEST 2 = IC-BUS TEST = BBA 0 TEST 4 = CA BA TEST = FTA 1 TEST 3 = MPX ADAPTER TEST = BMPX-1 ADAPTER TEST
ENTER			
Second Display	0 = SBA/SUPPORT BUS TEST 1 = PU-BSM TEST 2 = IC-BUS TEST 3 = MPX ADAPTER TEST 4 = CA BA TEST 5 = BMPX-1 ADAPTER TEST 6 = FTA 1 TEST 7 = BBA 0 TEST	0 = SBA/SUPPORT BUS TEST 1 = PU-BSM TEST 2 = IC-BUS TEST 3 = BBA 0 TEST	0 = SBA/SUPPORT BUS TEST 1 = PU-BSM TEST 2 = IC-BUS TEST 3 = MPX ADAPTER TEST 4 = CA BA TEST

This page has been
intentionally left blank

IC Bus Test

Test Handling - Actions

Prerequisites:

- Power complete
- Diagnostic diskette inserted
- PU-BSM test run

How to Select the Test

1. Call M/S PROGRAM SELECTION.
   Hold down ALT key and press DIAG key. [A]
2. Select 'CENTRAL COMPLEX', press ENTER. [B]
3. Select IC-BUS TEST, press ENTER. [C]
   This selection automatically tests IC bus 0 and 1, if installed.
4. Press ENTER to start test.
   During test run, the message LOG PENDING can appear on line 23.

- Run time about 40 seconds if both buses are tested.
- Test stops at test end displaying STOPPED in (S)
- If an error is detected the test also completes and in addition to the message STOPPED a reference code and at least 1 symptom code is shown (A) and (C)
  By pressing ENTER a running test or routine can be stopped. Stop occurs always at routine end.

Run Modes

The following parameters (D) can be specified

LOOP (Y/N)
N=default. If Y is selected the test or routine will loop until stopped.

RTN: 01 TO:..
a) 01 TO.. = default if no TO-routine is specified. Test runs from routine 01 to last routine.

b) To run or loop a complete test, not starting with RTN01: Enter start routine number in the RTN-field, and start routine number minus 1 in the TO-field:
   RTN: 08 TO: 07

c) To run or loop a specific routine: Enter the routine number in both fields:
   RTN: 05 TO: 05

Note: Routine 00 must not be entered. This is an auxiliary routine for special purposes.

ANALYSIS (Y/N):
Y=Default. If analysis is enabled (Y) symptom codes and a reference code are displayed in (C) and (A) in case of error.
Enter 'N' to suppress error analysis. This can be useful if 'loop a routine' is specified. In this case the routine loops under real-time conditions, that means, the analysis phase does not always interrupt the test execution.

ADAPT: 0 (Physical address)
The adapter number is displayed automatically. Do not change the adapter number. To test another adapter select the appropriate test from the CENTRAL COMPLEX menu.
If a valid adapter number would be entered, the test starts but generates false reference codes.
If an invalid number is entered, the message INV. INPUT is shown in (B) .

What to Do in Case of Error

If the test stops with a reference code displayed in (A) go to MAP 2370.

How to Terminate the Test

If you want to run another test return to M/S PROGRAM SELECTION. Select new test, otherwise perform the following steps:
1. Press ENTER, to stop the test
2. Insert control diskette
3. Perform re-IML
4. Return machine

Test Handling - Results

Screen displays:

[A] 'IBM MAINTENANCE AND SERVICE PROGRAM SELECTION'

[B] 'CENTRAL COMPLEX TEST SELECTION'

[C]

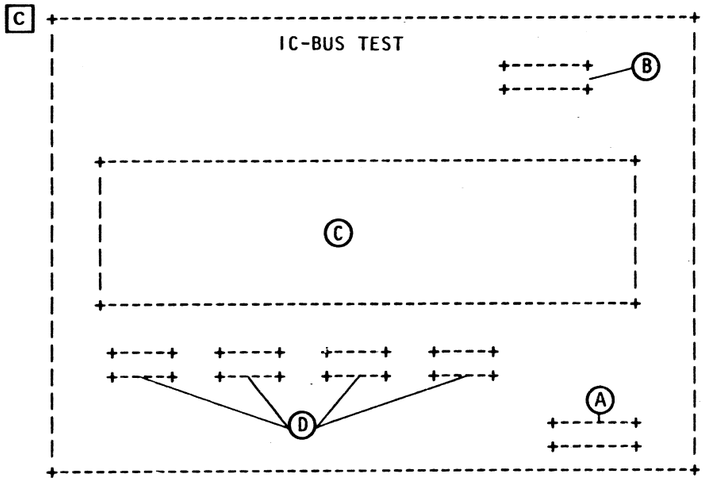

(A) Reference code
(B) Status of test
(C) Symptom code display field
(D) Run mode selection field

PU-BSM Test

Test Handling - Actions

Prerequisites

- 'Power Complete' Light on

How to Select the Test

1. Insert the diagnostic diskette.
2. Press IML to reload the service processor. (This ensures correct execution of the test.)
3. Call M/S PROGRAM SELECTION. **1**
4. Key in selection for 'CENTRAL COMPLEX', press ENTER. **2**
5. Select PU-BSM test, press ENTER. **3**
6. Press ENTER to start test.
   - Test runs in mode 4, (diagnostic mode), default mode.
   - Run time about five minutes.
   - Pressing ENTER stops test at overlay end.
   - Pressing ENTER a second time the test continues to execute.
   - Test stops at test end displaying STOPPED in G .
   - A reference code is displayed in G in case of error. Use this reference code to enter the appropriate MAP.

How to Terminate the Test

1. Press ENTER, to stop the test.
2. Insert control diskette.
3. Perform re-IML.
4. Return machine.

If you want to run another test return to M/S PROGRAM SELECTION. Select new test.

Test Handling - Results

Screen displays:

1 'IBM MAINTENANCE AND SERVICE PROGRAM SELECTION'

2 'CENTRAL COMPLEX TEST SELECTION'

3 PU Test Frame Picture

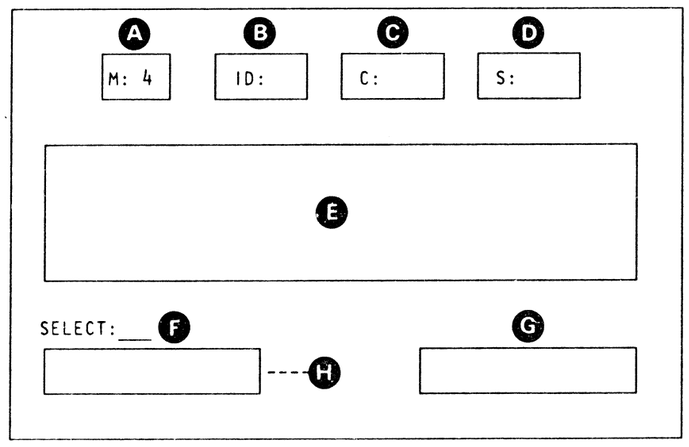

A Display of Test Mode. Mode 4 is the default value, no entry has to be made.

B Identifier of test section just running. After the test has been started, the display identifier changes whenever a new routine is executed, thus also indicating that the test is running.

C Displays the identifier of the test step.

D The card location(s) of the suspected FRU(s) are displayed in this field.

E Displays PU hardware data, if test runs in mode 3 and stops with error. The displayed data is to be used in case of support.

F Enter field for test options.

G Displays RUNNING, STOPPED, or a reference code, if an error is detected.

H If one or more additional reference codes are displayed in this field, use these codes first for error analysis.

PU-BSM Test (continued)

Control Store (CS) Test

There are two different control store cards available.

Type 0 ---> Card QA5
Type 1 ---> Card QS2

Each type has its own test described on the following pages.

CS Test for Type 0 (QA5)

Description of Test

The test consists of seven passes. (LOOP..) specifies how often the test should be repeated.

During the first pass the storage area, specified by parameter BEG and END, is loaded with consecutive blocks of pattern. In the first pass block load starts at BEG +0 (displacement). After load is completed the test patterns of the blocks are executed. After the last block is executed the next pass will be executed if no repetition of pass is specified (PASS..).

In pass two to seven the load address BEG is modified by +1 (BEG+1, BEG+2, until BEG+6), but the execution remains the same as in pass one.

At the end of pass seven the test is stopped if no LOOP count is specified.

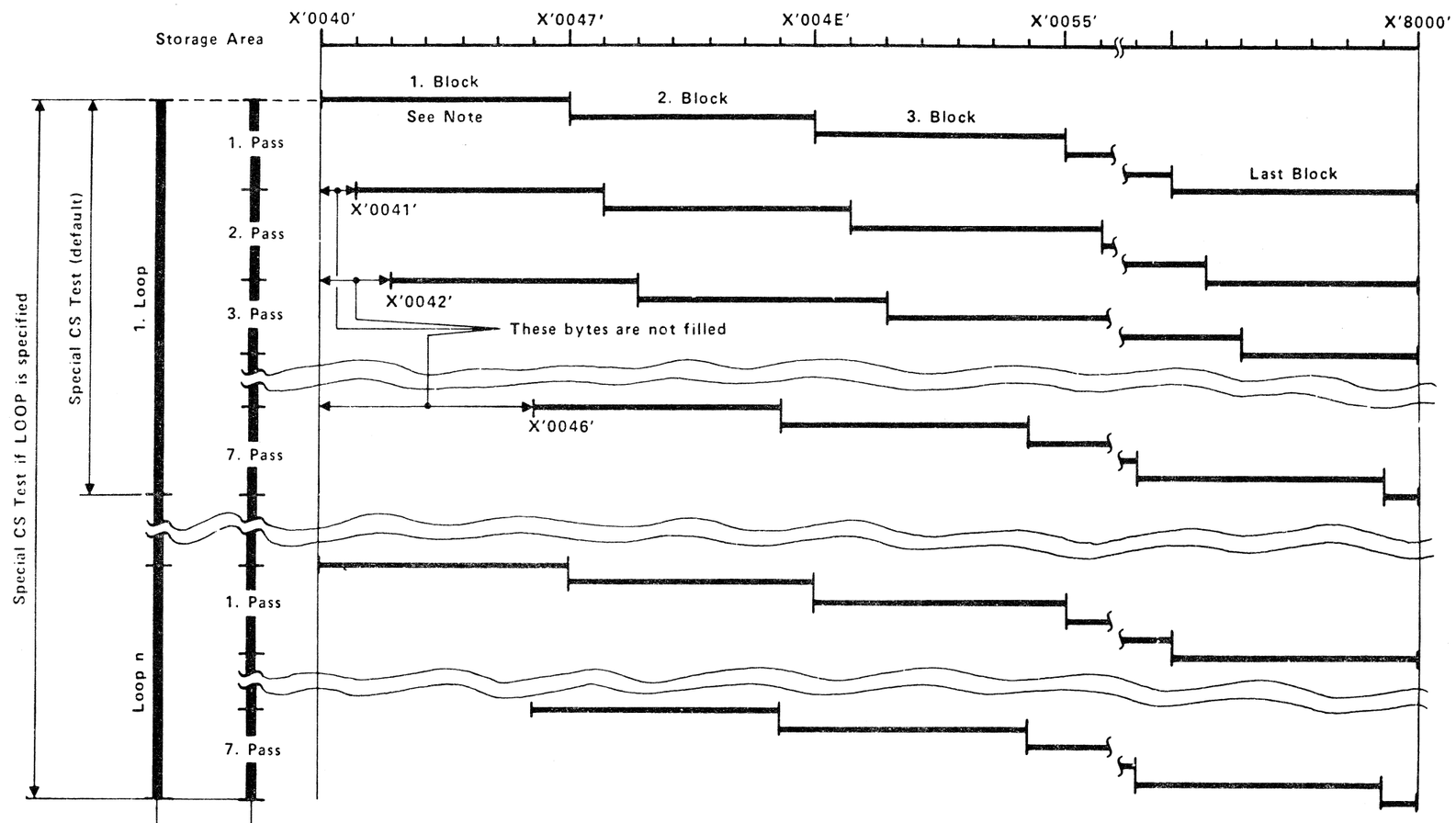

If in 'PASS XX' a value is entered, each pass is looped until count is zero. Thereafter the next pass is executed.

If in 'LOOP XX' a value is entered the whole test is looped until count is zero.

Note: A pass consists of two phases, the load phase and the execute phase. In the load phase the storage area is loaded with consecutive blocks of test patterns. Thereafter, one block of test pattern after the other is executed.

If in 'BLOCK XX' a value is entered, every block is looped until count is zero. Then the next block is executed.

CS-Test for Type 0 (continued)

Test Handling - Actions

Prerequisites

- Selection of 'PU-BSM test'

How to Use the Control Store Test

1. Enter 'CT' in the SELECT field, press ENTER. 4
   After a delay the CT selection picture is displayed with all default run parameters for the CT test.

2. If you want to run the CT-test in the default selection, press ENTER to start the test, otherwise type in the new run parameters first.

   Test runs about one minute if the default selection is used and the CS-size is 16 K. For 32 K CS-size run time is approx. 2.5 minutes.

Result of Test Run

Up to ten errors can be displayed F . If an error is detected looping of this block is stopped. Test continues with next block.

The test stops if the ten error display lines are used up or after all loops are completed.

Test Handling - Results

4

```
+-------------------------------------------------------------------------------------+
|                                                                                     |
| PU-BSM-TEST  M:CT  ID:     C:     SYMP:                                            |
|                                                                                     |
| CS-TEST                                                                             |
|        +-----------------------------------------------+                  +----------+|
|        | C.  IS...... XOR..... ADR.   DI  BL  PA  LP  |                  |TEST PAT: ||
|        |                                               |                  |0 60960897||
|        | 01 019FCFB7  00000020 7D6C  00  01  02  01    |                  |1 6D693068||
|        | 10 7031187D  00001000 7D4B  01  01  03  01    |                  |2 019FCF97||  E
|        |                                               |                  |3 703108..||
|        |                                               |                  |4 019FFC00||
|        |                    F                          |                  |5 603103..||
|        |                                               |                  |6 024E0000||
|        |                                               |                  +----------+|
|        |                                               |                              |
|        +-----------------------------------------------+                              |
|                                                                                     |
| SEL: CT |BEG:  0040   END:  8000   BLOCK:  F0    PASS: 03  LOOP: 01 |    STOP        |
|         +-----------------------------------------------------------+                |
|                                   TIMER:OFF                DATA:        ADDR:        |
|      B            D                                                                 |
|                                                        ERROR XXXXXXXX SYMP YY  A    |
+-------------------------------------------------------------------------------------+
```

A Error ≙ Indicates the occurrance of an error.

XXXXXXXX ≙ Reference Code
SYMP YY ≙ Symptom (card position)
YY = 02 ---> C2
YY = 03 ---> D2

B Selection Field

D Test Parameter Enter Fields

After selecting the CT-test the default values are displayed.

BEG: Begin address of test area must not be < X'0040'.

END: End address of area to be tested (< or = CS size).

BLOCK: Number of repetitions for each block.

PASS: Number of repetitions for each pass.

LOOP: Number of repetitions for whole test.

E Test pattern which is loaded into all blocks.

F See next page

PU-BSM Test (continued)

CS Test Type 0 (continued)

Test Handling - Results

F Error Display Field

Depending on the error (bit failure, or address error) some fields have a different meaning.

Meaning of fields if bit failure:

C. 10 = OP register check 0,2
01 = OP register check 1, 3

IS..... Failing test pattern in the OP register.

XOR..... Indicates the failing bit.

Example: 01 8197DFB6 00000020

Bit with value 2 is wrong.

ADDR. Failing control store address.

Meaning of fields if address error:

C. Displays AE for address error.

IS..... Displays the wrong address which was generated. Address is shown right adjusted.

XOR..... Shows correct address left aligned.

The fields DI, BL, PA, and LP have for bit failure and address error the same meaning.

DI Displacement of pass in which the error occurred.

BL Count shows how often block was repeated when error occurred.
BL = 1 Error was detected in first run of block.

PA Count shows how often pass was repeated when error occurred.

LP Count shows how often the whole test was looped when error occured.

CS Test for Type 1 (QS2)

Test Handling - Actions	Test Handling - Results

Prerequisites

- Selection of 'PU-BSM test'

How to Use the Control Store Test

1. Enter 'CT' in the SELECT field, press ENTER. After a delay the CT selection picture is displayed with all default run parameters for the CT test. This delay is caused by execution of buster 4777. **1**

2. Run the CS-test in the default mode. (F)
   Press ENTER to start the test.

   Note that when started this test cannot be stopped. It stops automatically either

   - after completion or
   - with X'400' inversions or
   - on the occurrance of not correctable errors.

Result of Test Run

If an error is detected the test is stopped.

Note: With this storage type, errors may be corrected by storing the respective bit pattern 'inverted'. Inversions are time consuming and therefore limited. IML, and all tests which use the control storage, require an increased execution time (depending upon the number of inversion). Successful inversions and their count (hex) are displayed (I: XXXX) on the screen. After hex 400 inversions, a warning reference code is displayed. (The same reference code will appear during IML.)

A

```
PU-BSM-TEST M:CT  ID:      C:      SYMP:
 CS-TEST    .....
                                                    (C)
(B) INVCNT:  0400   DATA:      PTY:   IBIT:   ADR:   PAX:
             0400   00000020   0      0
                    (G)                              ↑     ↑   Ignore these fields
(A) ERRCNT:  ....   ........   .      .      .... ..
             ....   ........   .      .      .... ..
             ....   ........   .      .      .... ..
             ....   ........   .      .      .... ..
             ....   ........   .      .      .... ..
             ....   ........   .      .      .... ..
                 THERE ARE  >  1024 INV ERR IN. TEST WILL RUN > 30 MIN.  (D)
(F) BEG: 0048  END: 8000  PASS: 03  RUN: 00  ALL: 0
                                TIMER: ON              DATA:    ADDR:
                                TOD: SEC               RUNNING E0861A01  (E)
8110
```

(A) ERRCNT: Count of not correctable errors.

(B) Invert Count.

(C) 0400 = Number (hex count) of single bit errors (inverted bits), which are corrected by inversions.

DATA, PTY, IBIT = These fields show those bits as (1) which failed and caused an inversion. (Data = 32 data bits; PTY = 1 parity bit) (per storage word); IBIT = 1 invert bit (per storage word)

(D) Note, which indicates, that the number of acceptable inversions ('400') is exceeded. Large increase of testing time is to be expected. (See explanation for IML screen on next page.)

(E) Reference Code (Warning)
The indication 'Running' means that the execution of the CS-Test is currently interrupted (not stopped) by the occurrance of an error. The test may be continued by pressing 'ENTER' but this is not recommended because of the long execution time (see also (D)).

(G) Upper field ≙ Number (count) of inverted bits.

Lower field ≙ Number (count) of actual inversions.

Screen Layouts

Particularities for Control Storage Type 1 (QS2)

IML

```
80323143                          4331 IML
 L*IBM*4331        BM*4331*IM            ML*IBM*433        1*IML*IBM*
 L*IBM*4331        BM*4331*IML          IML*IBM*433        1*IML*IBM*
   IBM*43            *4331*IML*        *IML*IBM*4           IML*IB
   IBM*43            *4331*IML*I      1*IML*IBM*4           IML*IB
   IBM*43            *4331*IML*IB    31*IML*IBM*4           IML*IB
   IBM*43            *4331* ML*IBM  331*IM *IBM*4           IML*IB
   IBM*43            *4331*  L*IBM*4331*I  *IBM*4           IML*IB
   IBM*43            *4331*   *IBM*4331*   *IBM*4           IML*IB
   IBM*43            *4331*    IBM*4331    *IBM*4           IML*IB      1*IML
 L*IBM*4331        BM*4331*     BM*433     *IBM*433        1*IML*IBM*4331*IML
 L*IBM*4331        BM*4331*      M*43      *IBM*433        1*IML*IBM*4331*IML
SECTION 03 OF 04  PU/BSM LOAD        81023173 VRFY CS   ID:1100 LE:0000 [I:061F]
                            370 TIMER: ON              DATA:        ADDR:
                            TOD: SEC                              [E0861A01]
012B
```

I ≙ Inversion occurred
061F ≙ Number of inversions (count)

Reference Code

- After hex 400 inversions = warning. With the appearance of the warning reference code the customer can still use the machine, but the card should be replaced at the earliest opportunity.
- If count of inversions exceeds limit = termination. If there are too many inversions IML is terminated and a reference code is displayed. This case requires immediate action.

CS Alter/Display Selection B4

```
PU-TOOL   15DEZ79        RAO   CS:32KS  MS:4M
     00....03 04....07 08....11 12....15 16....19 20....23 24....27 28....31

                          SRL - CHAINS

     0008     0009 I   000A     000B I   000C     000D I   000E     000F [I]
IS:  00000000 00000200 00000000 00000200 00000000 00000200 00000000 [00000200]
BE:  00000000 00000000 00000000 00000000 00000000 00000000 00000000 00000000
  EXECUTE: CS0008
  SELECT:  CS0010            AM: 00
                                  TIMER: ON        DATA:        ADDR:
                              TOD: SEC
LOG-PENDING                                        STOPPED
8107
```

I ≙ Indication for successful inversion. (An * would indicate either an CS error after IML or an unsuccessful inversion.)

Bit pattern read out from CS before its inversion (required to find out failing bit position).

Diagnostic MS Test

Program Handling - Actions

Prerequisites

- Selection of PU-BSM test

How to Select the DM-Test

Enter DM in the SELECT field of the PU-BSM test, press ENTER. After a delay this causes the DM selection picture 5 to be displayed.

How to Use the Test

There are different cases where the DM test can be used. In any case press ENTER after you have entered your parameters. This causes the test to be executed once. If the parameter RUN: is changed to greater '00' the test loops until it is stopped by pressing ENTER.

Case 1:

A given address (from log display) is available. An uncorrectable error is assumed at this address. Enter this address in the UNCADR field, press ENTER.

Case 2:

No address available. The test is selected for diagnostic purposes.Do not change value in the UNCADR field, press ENTER.

For both cases refer to 'Result of DM Test Run' for test result interpretation.
If you suspect a failing card(s) but the DM test result does not show an asterisk (*) or a count greater X'400', select the IM test under the

Test Handling - Results

Result of DM Test Run

If the test runs error-free, the test stops with the message

STOPPED in E

and NO ERROR displayed in B . In case of an error the location of the failing card and an error count is displayed in field B together with the message STOPPED.

For case 1 replace the card if an asterisk is displayed. For case 2 replace any card (s) which show an count greater X'400'.

5

```
PU-BSM-TEST M:DM ID:          C:        SYMP:
DM-TEST  ALLERR:  00000040    <---A
P2:X0040    <---B

SEL: DM  UNCADR:  FFFFF8      RUN: 00          STOPPED
                    |           |               |
                    C           D               E
```

A In case of error(s) ALLERR: XXXXXXXX is displayed. In the X-field the total (ALL) errors of the tested array card (s) are given.

B This field gives the total errors of each array card.

```
T2:  *  FFFF
|    |   |--- Error count
|    |        (FFFF indicates counter overflow)
|    |------- X = errors per card
|    |------- * = errors per card including
|                uncorrectable error at
|                address entered in UNCADR.
|-- Card location
```

C Enter field for the uncorrectable error address, found in the LOG. Default is FFFFF8 (=invalid address). Avoids erroneous indication of uncorrectable errors

D If a value other than 00 is entered the test loops until stopped by pressing ENTER.

IM-Test

Program Handling - Actions

Prerequisites

- DM test has been executed but did not show an error however a failing card is assumed. In this case run sub- selection IM of the PU-Tool.
- Insert diagnostic diskette

How to Select the IM-Test

- Call M/S PROGRAM SELECTION 1
- Key in selection for MANUAL OPERATIONS 2
- Key in selection for PU TOOL 3

How to Run the IM-Test

- Enter IM in the select field B , press ENTER. This causes individual test routines (busters) to be executed. Thereafter the test stops displaying picture 4 . This is the IM-test screen display.
- Do not alter the displayed values in the control fields C . Press ENTER to start the actual IM-Test.
- Run time approx. 2 minutes per 1MB storage.

In case the test runs error-free the screen will display the message D below the topline.
In case the test encounters an error(s) the screen display 5 shows the message ERROR E and at least one line of error information F and a reference code G . Up to ten error lines per screen can be displayed. Only if the two XX-digits in the reference code equal X'0A' you can continue, otherwise call for support. In case of card replacement restart with PU-BSM test.

Program Handling - Results

Screen displays:

1 IBM MAINTENANCE AND SERVICE PROGRAM SELECTION

2 MANUAL OPERATIONS

3

```
  PU-TOOL     18JUL80        RA0    CS:32K    MS:1M
     00....03 04....07 08....11 12....15 16....19 20....23 24....27
A:   00000000 00000000 FF0003F9 0000101F 1000400B C56084D9 C560E000
B:   00000000 00000000 00000000 00000000 10220010 C03B0009 0EFFA300

H:   21DB0000 FF830000 00000000 00000000 000000F8 00F800F8 00F80
I:   00000000 00000000 00000000 00000000 00000000 00000000 00000

IS:
BE:
  EXECUTE:
  SELECT : IM<--B      AM: 00
                            TIMER:ON                DATA:
                         TOD:SEC
803D
```

4

```
      PU-TOOL     18JUL80        RA0    CS:32K    MS:1M
     IM-TEST
    TYPE M ERRADR  .ACTUAL>  XOR.RSLT  FRU

C---->SEL: IM    BEG: 000000    END: 100000    LOOP CNT: 00    ECC(Y/N): Y
                                     TIMER:ON                    DATA:
                                  TOD:SEC                         STOPPED
   803A
```

```
      PU-TOOL     18JUL80        RA0
D----> IM-TEST  O.K.  EOT
    TYPE M ERADR  .ACTUAL.  XOR.RSLT  FRU
```

How to Run the IM-Test (continued)

If the reference code displays X'0A'
replace the FRU(s) H indicated. Use the FRU-table 6 for
card location. Only if EOT is displayed behind J ,the test has
completed and all errors have been shown.

If the word LIMER is displayed behind ERROR K more than ten lines of
error information are available.
Replace the FRUs indicated in this display. Restart the IM-test and
continue to replace FRUs if the test still shows errors. All errors
have been displayed if EOT is shown.

5

```
 PU-TOOL     18JUL80          RA0
 IM-TEST  ERROR      <---E
TYPE M ERRADR  .ACTUAL.  XOR.RSLT  FRU
DATA R 0DDC18  BD72E5CA  00000001  T
DATA V 0DD018  BD72E5CA  00000001  T  }<---F
DATA V 0DD018  BD72E5CA  00000001  T                    G
                                   |
                                   +--H                 V
                                                REF CODE : 4BB3XX81

SEL: IM    BEG: 000000   END: 100000   LOOP CNT: 00   ECC(Y/N): Y
                            TIMER:ON                  DATA:
                          TOD:SEC                      STOPPED
803A
```

```
 PU-TOOL     18JUL80          RA0
IM-TEST  ERROR EOT <---J
```

```
 PU-TOOL     18JUL80          RA0
IM-TEST  ERROR LIMER <---K
```

FRU TABLE

6

FRU	NAME	FRU LOCATION
U	BSM CARD 9	01A-B1U2
T	BSM CARD 8	01A-B1T2
R	BSM CARD 7	01A-B1R2
Q	BSM CARD 6	01A-B1Q2
P	BSM CARD 5	01A-B1P2
N	BSM CARD 4	01A-B1N2
M	BSM CARD 3	01A-B1M2
L	BSM CARD 2	01A-B1L2

This page has been
intentionally left blank

FTA (X) Test

Test Handling - Results

Prerequisites:

- IML
- Diagnostic diskette inserted
- PU/BSM test and IC-bus test run
- If the CTLI test has been executed before, verify that the wrap connectors have been removed and the CTLI cables are properly seated.

How to Select the Test

1. Call M/S PROGRAM SELECTION.
   Hold down ALT key and press DIAG key. [A]
2. Key in selection for 'CENTRAL COMPLEX', press ENTER. [B]
3. Select FTA test 1, 2 or 3, press ENTER. [C]
4. The status field displays SELECTION. Enter new run mode if you want to change the default.
   Press ENTER to start test.
   - Run time about two minutes.
   - Test stops at test end displaying STOPPED in (B).
   - If an error is detected the test also runs to the end and in addition to the message STOPPED a reference code and at least one symptom code is shown in (A) and (C).
     By pressing ENTER a running test or routine can be stopped. Stop occurs always at routine end.

Run Modes

The following parameters (D) can be specified

LOOP (Y/N)
N=default. If Y is selected the test or routine will loop until stopped.

RTN: 01 TO:..

a. 01 TO.. = default if no TO-routine is specified. Test runs from routine 01 to last routine.

b. To run or loop a complete test, not starting with RTN01:
Enter start routine number in the RTN-field, and start routine number minus 1 in the TO-field:
RTN: 08 TO: 07

c. To run or loop a specific routine: Enter the routine number in both fields:
RTN: 05 TO: 05

Note: Routine 00 must not be entered. This is an auxiliary routine for special purposes.

ANALYSIS (Y/N):
Y=Default. If analysis is enabled (Y) symptom codes and a reference code are displayed in (C) and (A) in case of error.
Enter 'N' to suppress error analysis. This can be useful if 'loop a routine' is specified. In this case the routine loops under real-time conditions, that means, the analysis phase does not always interrupt the test execution.

ADAPT: 9 = FTA 1, 4 = FTA 2, 2 = FTA 3 (Physical address)
The adapter number is displayed automatically. Do not change the adapter number. To test another adapter select the appropriate test from the CENTRAL COMPLEX menu.
If a valid adapter number would be entered, the test starts but generates false reference codes.
If an invalid number is entered, the message INV. INPUT is shown in (B).

What to Do in Case of Error

If an error is indicated rerun the test with power off on all attached control units. If the error is still indicated use the reference code in (A) to enter the correct MAP. If no error is indicated suspect the control interface. Run CTLI Wrap test.

How to Terminate the Test

If you want to run another test return to M/S PROGRAM SELECTION. Select new test, otherwise perform the following steps:

1. Press ENTER, to stop the test
2. Insert control diskette
3. Perform re-IML
4. Return machine

Test Handling - Results

Screen displays:

[A] 'IBM MAINTENANCE AND SERVICE PROGRAM SELECTION'

[B] 'CENTRAL COMPLEX TEST SELECTION'

[C]

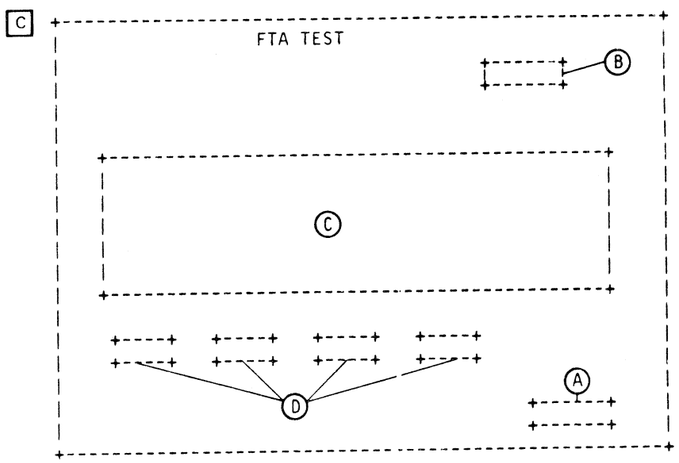

(A) Reference code

(B) Status of test

(C) Symptom code display field

(D) Run mode selection field

Control Interface Wrap Test

Test Handling - Actions

Prerequisites:

- Power complete
- IML
- Diagnostic diskette inserted
- PU/BSM test, IC-bus test, FTA test run
- Wrap connectors cable assembly P/N 8483860 must be available.
- All attached controllers must have power off.

How to Plug the Wrap Connectors

Drop power on all connected control units. Plug the wrap connectors for bus and tag lines on the terminals of the first control unit seen from the 4331.

If an 8809 is attached the CTLI cables must be disconnected at the control unit and the wrap connectors must be plugged at the end of the CTLI cable.

Run the test. An error indication at this point shows that the error is inside the system, possibly a bad connection at gate 01D. No error means that the connectors have to be moved to the next control unit and so on until the whole control interface is tested.

If no IBM controller is attached, plug the wrap connectors on the terminals at the processor in gate 01D according to the following list:

	FTA1	FTA2	FTA3
Bus lines	01D-A2	01D-C2	01D-E2
Tag lines	01D-B2	01D-D2	01D-F2

How to Select the Test

1. Call M/S PROGRAM SELECTION. Hold down ALT key and press DIAG key. [A]
2. Key in selection for 'CENTRAL COMPLEX', press ENTER. [B]
3. Select appropriate test, press ENTER. [C]
4. Press ENTER to start test.

- Run time about thirty seconds.
- Test stops at test end displaying STOPPED in (B).
- If an error is detected the test also runs to the end and in addition to the message STOPPED a reference code and at least one symptom code is shown. (A) and (C)
  By pressing ENTER a running test or routine can be stopped. Stop occurs always at routine end.

Run Modes

The following run mode parameters (D) can be specified.

LOOP (Y/N)
N = default. If Y is selected the test or routine will loop until stopped.

RTN: 01 TO:..
a) 01 TO.. = default if no TO-routine is specified. Test runs from routine 01 to last routine.

b) To run or loop a complete test, not starting with RTN01:
Enter start routine number in the RTN-field, and start routine number minus 1 in the TO-field:
RTN: 08 TO: 07

c) To run or loop a specific routine:
Enter the routine number in both fields:
RTN: 05 TO: 05

Note: Routine 00 must not be entered. This is an auxiliary routine for special purposes.

ANALYSIS (Y/N):
Y = Default. If analysis is enabled (Y) symptom codes and a reference code are displayed in (C) and (A) in case of error.
Enter 'N' to suppress error analysis. This can be useful if 'loop a routine' is specified. In this case the routine loops under real-time conditions, that means, the analysis phase does not always interrupt the test execution.

ADAPT: 9 = FTA 1, 4 = FTA 2, 2 = FTA 3 (Physical address)
The adapter number is displayed automatically. Do not change the adapter number. To test another adapter select the appropriate test from the CENTRAL COMPLEX menu.
If a valid adapter number would be entered, the test starts but generates false reference codes.
If an invalid number is entered, the message INV. INPUT is shown in (B).

What to Do in Case of Error

Go to MAP C180 for CTLI 1 or
C280 for CTLI 2 or
C380 for CTLI 3

If 3370 I/Os attached to the Control Interface use also 3370 MIM pages Ctrl. 10 &20.

MLX Exit 4
To 3370 MIM MLX page

How to Terminate the Test

If you want to run another test return to M/S PROGRAM SELECTION. Select new test.
If you had disconnected any cables or connectors check for proper reconnection.
If you don't want to select a new test do the following steps:

1. Press ENTER, to stop the test
2. Insert control diskette
3. Perform re-IML
4. Return machine

Test Handling - Results

Screen displays:

[A] 'IBM MAINTENANCE AND SERVICE PROGRAM SELECTION'

[B] 'CENTRAL COMPLEX TEST SELECTION'

[C]

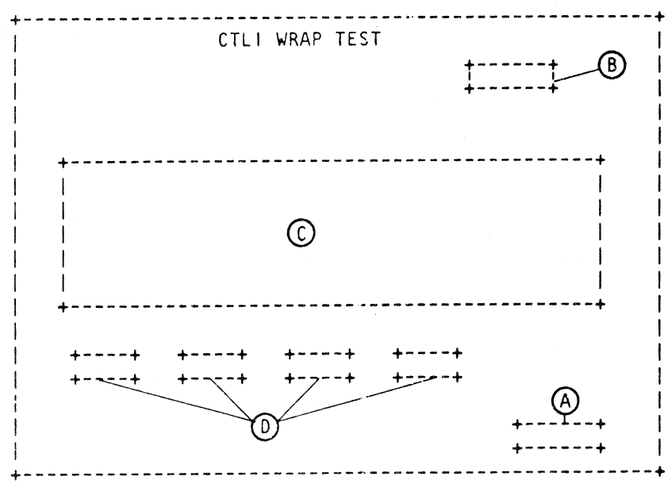

(A) Reference code
(B) Status of test
(C) Symptom code display field
(D) Run mode selection field

MPX/BMPX Adapter Test

Test Handling / Actions

Prerequisites:

- Power complete
- Diagnostic diskette inserted
- PU/BSM test run, IC bus test run.

How to Select the Test

1. Call M/S PROGRAM SELECTION. Hold down ALT key and press DIAG key. [A]
2. Key in selection for 'CENTRAL COMPLEX', press ENTER. [B]
3. Enter appropriate selection for:
   MPX ADAPTER TEST or
   BMPX 1 or 2 ADAPTER TEST.
   to test the ACC/SCA cards of the MPX or BMPX adapter Press Enter [C] .
4. Press ENTER to start test.
   - Run time about 2.5 minutes
   - Test stops at test end displaying STOPPED in (B) .
   - If an error is detected the test also runs to the end and in addition to the message STOPPED a reference code and at least one symptom code is shown (A) and (C)
     By pressing ENTER a running test or routine can be stopped. Stop occurs always at routine end.

Run Modes

The following parameters (D) can be specified:

LOOP (Y/N)
N=default. If Y is selected the test or routine will loop until stopped.

RTN: 01 TO:..
a) 01 TO.. = default if no TO-routine is specified.
Test runs from routine 01 to last routine.

b) To run or loop a complete test, not starting with RTNO1:
Enter start routine number in the RTN-field, and start routine number minus 1 in the TO-field:
RTN: 08 TO: 07

c) To run or loop a specific routine:
Enter the routine number in both fields:
RTN: 05 TO: 05

Note: Routine 00 must not be entered. This is an auxiliary routine for special purposes.

ANALYSIS (Y/N):
Y=Default. If analysis is enabled (Y) symptom codes and a reference code are displayed in (C) and (A) in case of error.
Enter 'N' to suppress error analysis. This can be useful if 'loop a routine' is specified. In this case the routine loops under real-time conditions, that means, the analysis phase does not always interrupt the test execution.

ADAPT: 6 = MPX, A = BMPX 1, 4 = BMPX 2 (Physical address)
The adapter number is displayed automatically. Do not change the adapter number. To test another adapter select the appropriate test from the CENTRAL COMPLEX menu.
If a valid adapter number would be entered, the test starts but generates false reference codes.
If an invalid number is entered, the message INV. INPUT is shown in (B) .

What to Do in Case of Error

If the test stops with a reference code displayed in (A) go to the referenced MAP.

How to Terminate the Test

If you want to run another test return to M/S PROGRAM SELECTION. Select new test, otherwise perform the following steps:

1. Press ENTER, to stop the test
2. Insert control diskette
3. Perform re-IML
4. Return machine

STM

Test Handling - Results

Screen displays:

[A] 'IBM MAINTENANCE AND SERVICE PROGRAM SELECTION'

[B] 'CENTRAL COMPLEX TEST SELECTION'

[C]

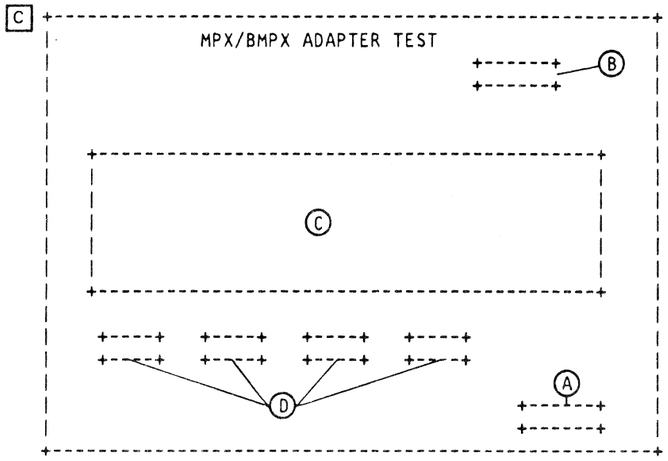

(A) Reference code

(B) Status of test

(C) Symptom code display field

(D) Run mode selection field

Standard Interface Test for MPX/BMPX and HSC

Test Handling - Actions

Prerequisites:

- Power complete
- Diagnostic diskette inserted
- PU/BSM test, IC-bus test, ACC/SCA test run errorfree
- Wrap Connector Plug (Bus) P/N 8483772 and Wrap Connector Plug (Tag) P/N 8483773 must be available.

How to Plug the Wrap Connectors

Drop Power on all connected control units.
Plug the wrap connectors for bus and tag lines on the terminals of the IBM control unit next to the processor, and run test.
An error indication at this point shows that the error is inside the system, possibly a bad connection at gate OID. No error means that the connectors have to be moved to the next control unit and so on until the control interface is tested.
If no IBM control unit is attached, plug the wrap connectors on the terminals at the processor in gate 01D according to the following list:

	MPX	BMPX1	BMPX2	HSC
Bus lines	01D-D3	01D-F3	01D-C2	01D-E2
Tag lines	01D-E3	01D-G3	01D-D2	01D-F2

How to Select the Test

1. Call M/S PROGRAM SELECTION.
   Hold down ALT key and press DIAG key. [A]
2. Key in selection for 'CENTRAL COMPLEX', press ENTER. [B]
3. Select appropriate test, press ENTER. [C]
4. Press ENTER to start test.
   - Run time about 1 minute
   - Test stops at test end displaying STOPPED in (B).
   - If an error is detected the test also runs to the end and in addition to the message STOPPED a reference code and at least 1 symptom code is shown (A) and (C).
     By pressing ENTER a running test or routine can be stopped. Stop occurs always at routine end.

Run Modes

The following run mode parameters (D) can be specified.

LOOP (Y/N)
N = default. If Y is selected the test or routine will loop until stopped.

RTN: 01 TO:..

a) 01 TO.. = default if no TO-routine is specified.
Test runs from routine 01 to last routine.

b) To run or loop a complete test, not starting with RTN01:
Enter start routine number in the RTN-field, and start routine number minus 1 in the TO-field:
RTN: 08 TO:07

c) To run or loop a specific routine:
Enter the routine number in both fields:
RTN: 05 TO:05

Note: Routine 00 must not be entered. This is an auxiliary routine for special purposes.

ANALYSIS (Y/N):
Y=Default. If analysis is enabled (Y) symptom codes and a reference code are displayed in (C) and (A) in case of error.
Enter 'N' to suppress error analysis. This can be useful if 'loop a routine' is specified. In this case the routine loops under real-time conditions, that means, the analysis phase does not always interrupt the test execution.

ADAPT: 6 = MPX, A = BMPX 1, 4 = BMPX 2, 1 = HSC
(Physical address)
The adapter number is displayed automatically. Do not change the adapter number. To test another adapter select the appropriate test from the CENTRAL COMPLEX menu.
If a valid adapter number would be entered, the test starts but generates false reference codes.
If an invalid number is entered, the message INV. INPUT is shown in (B).

What to Do in Case of Error

Go to MAP 8080 for BMPX1 or 8180 for BMPX2,
8480 for MPX or 8280 for HSC

How to Terminate the Test

If you want to run another test return to M/S PROGRAM SELECTION. Select new test.
If you had disconnected any cables or connectors check for proper reconnection.
If you don't want to select a new test do the following steps:

1. Press ENTER, to stop the test
2. Insert control diskette
3. Perform re-IML
4. Return machine

Test Handling - Results

Screen displays:

[A] 'IBM MAINTENANCE AND SERVICE PROGRAM SELECTION'

[B] 'CENTRAL COMPLEX TEST SELECTION'

[C]

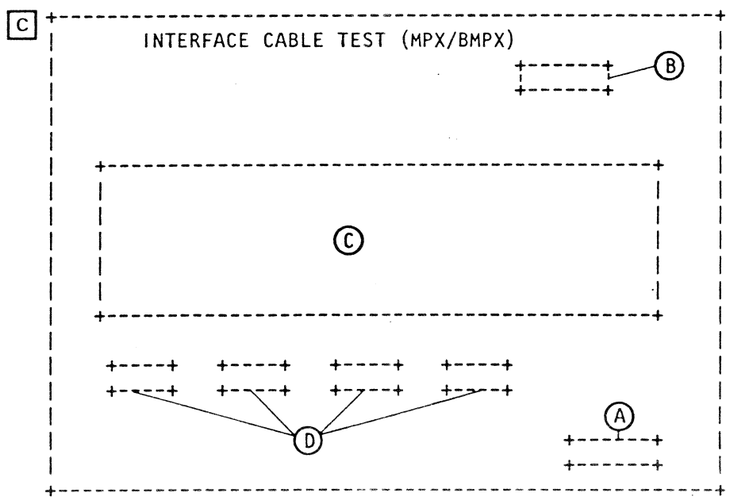

(A) Reference code
(B) Status of test
(C) Symptom code display field
(D) Run mode selection field

SBA/Support Bus Test

Test Handling - Action

Prerequisites

- IML
- SP must be powered up for part executed during IML.
- CEC must be powered up if test is selected manually.

How to Select the Test

1. Insert diagnostic diskette
2. Call M/S PROGRAM SELECTION
3. Select CENTRAL COMPLEX
4. Select SBA Test

Note: The SBA test is also included in the test chaining selection.

Test Handling

1. Press 'ENTER'
   Test starts to run in the default selection, this is no looping. If you specify looping, test routine string is repeated until stopped.
2. To stop test press 'ENTER' again.
3. Pressing 'ENTER' a third time returns you to the SBA selection picture. Selection of looping can now be changed.
4. Pressing 'ENTER' the fourth time starts test again in the desired mode (loop or no loop).

Test Description

The SBA test consists of ten routines. The routines cannot be selected separately, however, under certain conditions only some of the routines are executed.

Use of Test During IML

During the IML phase routines 1, 2, and 7 of the selectable SBA test are executed immediately after 'IML TEST OF SP CS ABOVE 32K'. If an error is detected at this time a reference code with the format shown is generated.

```
E03 . . .  01
    | | |
           Step number 1 to 6
    | |
      -    Routine number 1, 2, or 7
    |
    --     MCPC indicator
           0 = No MCPC error
           4 = MCPC timeout error
           8 = MCPC inbound parity error
```

In case of an MCPC error the address, command and data of the failing I/O instruction are displayed and the instruction is looped.

With no MCPC error the test ends in a hang loop.

In either error case IML cannot be continued.

Use of Test During Manual Selection

If the SBA test is selected from the test selection menu CEC must be powered up in order to run the test.

Error Indication

If the test was selected manually, and an error is detected, the reference code has the following format:

```
F3F . . .  81
    | | |
           Step number 1 to 6
    | |
      -    Routine number 1 to A
    |
    --     MCPC indicator
           0 = No MCPC error
           4 = MCPC timeout error
           8 = MCPC inbound parity error
```

If looping was not specified test stops after displaying the reference code, otherwise test loops between the beginning of the test and the occurance of the error.

Looping of Failing I/O Instruction

If the test is selected from the test menu failing I/O instructions will not be looped.

BBA 0/1 Test

Test Handling / Actions

Prerequisites:

- Power complete
- Diagnostic diskette inserted
- PU/BSM test run

How to Select the Test

1. Call M/S PROGRAM SELECTION. Hold down ALT key and press DIAG key. [A]
2. Key in selection for 'CENTRAL COMPLEX', press ENTER. [B]
3. Select ACC/BBA 0 TEST or ACC/BBA1 TEST, press ENTER. [C]
4. Press ENTER to start test.
   - Run time about 1 minute
   - Test stops at test end displaying STOPPED in (B)
   - If an error is detected the test also runs to the end and in addition to the message STOPPED a reference code and at least 1 symptom code is shown (A) and (C)
     By pressing ENTER a running test or routine can be stopped. Stop occurs always at routine end.

Run Modes

The following parameters (D) can be specified:

LOOP (Y/N)
N=default. If Y is selected the test or routine will loop until stopped.

RTN: 01 TO:..
a) 01 TO.. = default if no TO-routine is specified. Test runs from routine 01 to last routine.

b) To run or loop a complete test, not starting with RTNO1:
Enter start routine number in the RTN-field, and start routine number minus 1 in the TO-field:
RTN: 08 TO: 07

c) To run or loop a specific routine:
Enter the routine number in both fields:
RTN: 05 TO: 05

Note: Routine 00 must not be entered. This is an auxiliary routine for special purposes.

ANALYSIS (Y/N):
Y=Default. If analysis is enabled (Y) symptom codes and a reference code are displayed in (C) and (A) in case of error.
Enter 'N' to suppress error analysis. This can be useful if 'loop a routine' is specified. In this case the routine loops under real-time conditions, that means, the analysis phase does not always interrupt the test execution.

ADAPT: E = BBA 0 and BBA 1 (Physical address)
The adapter number is displayed automatically. Do not change the adapter number. To test another adapter select the appropriate test from the CENTRAL COMPLEX menu.
If a valid adapter number would be entered, the test starts but generates false reference codes.
If an invalid number is entered, the message INV. INPUT is shown in (B) .

What to Do in Case of Error

Go to MAP A280 (if BBA 1) or MAP F280 (if BBA 0)

How to Terminate the Test

If you want to run another test return to M/S PROGRAM SELECTION. Select new test, otherwise perform the following steps:
1. Press ENTER, to stop the test
2. Insert control diskette
3. Perform re-IML
4. Return machine

Test Handling - Results

Screen displays:

[A] 'IBM MAINTENANCE AND SERVICE PROGRAM SELECTION'

[B] 'CENTRAL COMPLEX TEST SELECTION'

[C]

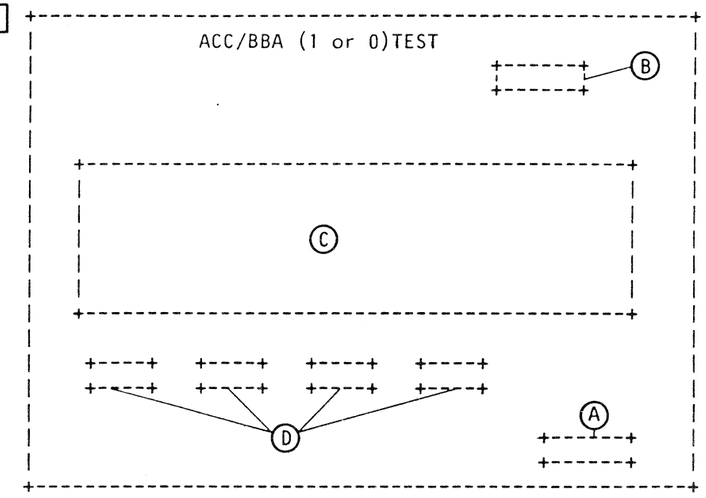

(A) Reference code

(B) Status of test

(C) Symptom code display field

(D) Run mode selection field

HSC ADAPTER TEST

Test Handling - Actions

Prerequisites:

- Power complete
- Diagnostic diskette inserted
- Processing Unit/BSM test, IC-bus test run

How to Select the Test

1. Call M/S PROGRAM SELECTION. Hold down ALT key and press DIAG key. [A]
2. Key in selection for 'CENTRAL COMPLEX', press ENTER. [B]
3. Select appropriate test, press ENTER. [C]
   Tests the ACC/SCA cards of the HSC adapter.
4. Press ENTER to start test.

- Run time about 2.5 minutes
  If routine 1F is excluded, runtime is only 0.5 minutes.
- Test stops at test end displaying STOPPED in (B). If any routine from 0 to 1E shows an error stop test and exclude routine 1F which would take two minutes run time. Run time reduces to 0.5 minutes.
- If an error is detected the test also runs to the end and in addition to the message STOPPED a reference code and at least one symptom code is shown. (A) and (C)
  By pressing ENTER a running test or routine can be stopped. Stop occurs always at routine end.

Run Modes

The following parameters (D) can be specified

LOOP (Y/N)
N=default. If Y is selected the test or routine will loop until stopped.

RTN: 01 TO:..
a. 01 TO.. = default if no TO-routine is specified. Test runs from routine 01 to last routine.

b. To run or loop a complete test, not starting with RTNO1:
Enter start routine number in the RTN-field, and start routine number minus 1 in the TO-field:
RTN: 08 TO: 07

c. To run or loop a specific routine:
Enter the routine number in both fields:
RTN: 05 TO: 05

Note: Routine 00 must not be entered. This is an auxiliary routine for special purposes.

ANALYSIS (Y/N):
Y=Default. If analysis is enabled (Y) symptom codes and a reference code are displayed in (C) and (A) in case of error.
Enter 'N' to suppress error analysis. This can be useful if 'loop a routine' is specified. In this case the routine loops under real-time conditions, that means, the analysis phase does not always interrupt the test execution.

ADAPT: 1 (Physical address)
The adapter number is displayed automatically. Do not change the adapter number. To test another adapter select the appropriate test from the CENTRAL COMPLEX menu.
If a valid adapter number would be entered, the test starts but generates false reference codes.
If an invalid number is entered, the message INV. INPUT is shown in (B).

What to Do in Case of Error

If the test stops with a reference code displayed in (A) go to the referenced MAP.

How to Terminate the Test

If you want to run another test return to M/S PROGRAM SELECTION. Select new test, otherwise perform the following steps:

1. Press ENTER, to stop the test
2. Insert control diskette
3. Perform re-IML
4. Return machine

Test Handling - Results

Screen displays:

[A] 'IBM MAINTENANCE AND SERVICE PROGRAM SELECTION'

[B] 'CENTRAL COMPLEX TEST SELECTION'

[C]

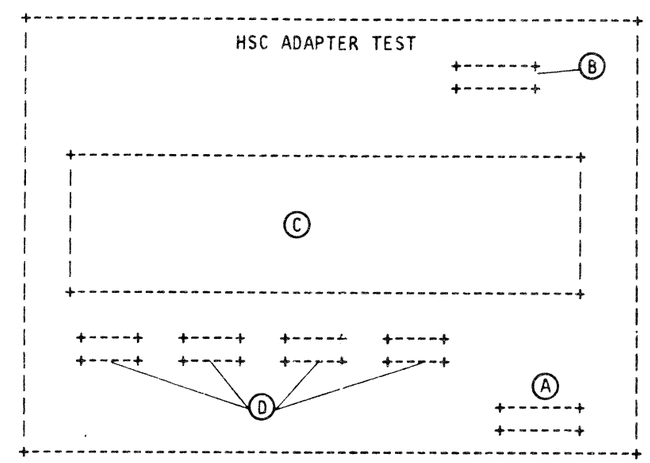

(A) Reference code

(B) Status of test

(C) Symptom code display field

(D) Run mode selection field

SCL IOSS/MSSS Test

Test Handling - Actions

Prerequisites

- Power complete
- Diagnostic diskette inserted
- PU/BSM test run

How to Select the Test

1. Call M/S PROGRAM SELECTION. [A]
2. Select CENTRAL COMPLEX, press ENTER. [B]
3. Select the appropriate test, press ENTER. [C]
4. Press ENTER to start test.
   - Run time is about 1 minute. The test stops at test end displaying STOPPED in (B) .
   - If an error is detected the test also runs to the end and in addition to the message STOPPED a reference code and at least one symptom code is shown in (A) and (C).
     By pressing ENTER a running test or routine can be stopped. Stop occurs always at routine end.

Exception for SCL MSSS Test

If the SCL MSSS test is selected the test stops at test end with the status RUNNING and the display for the CE panel lamp test [D]. Set the CE panel DISPLAY MODE switch to ON and execute the lamp test according to the information in display [D]. To stop the test either before or after lamp test execution press ENTER.

Run Modes

The following parameters (D) can be specified:

LOOP (Y/N)
N = default. If Y is selected the test or routine will loop until stopped.
If Y is specified for the SCL MSSS test ENTER has to be pressed twice in arapid successsion to stop the test.

RTN: 01 TO:..
a) 01 TO.. = default if no TO-routine is specified. Test runs from routine 01 to last routine.

b) To run or loop a complete test, not starting with RTN01: Enter start routine number in the RTN-field, and start routine number minus 1 in the TO-field:
RTN: 08 TO: 07

c) To run or loop a specific routine: Enter the routine number in both fields:
RTN: 05 TO: 05

Note: Routine 00 must not be entered. This is an auxiliary routine for special purposes.

ANALYSIS (Y/N):
Y = Default. If analysis is enabled (Y) symptom codes and a reference code are displayed in (C) and (A) in case of error.
Enter 'N' to suppress error analysis. This can be useful if 'loop a routine' is specified. In this case the routine loops under real-time conditions, that means, the analysis phase does not always interrupt the test execution.

ADAPT: X
The adapter number is displayed automatically. Do not change the adapter number. To test another adapter select the appropriate test from the CENTRAL COMPLEX menu.

What to Do in Case of Error

Go to MAP A280 (if BBA1) or MAP F280 (if BBA0)

Terminate the Test

If you want to run another test return to M/S PROGRAM SELECTION, select new test. Otherwise perform the following steps:
1. Press ENTER, to stop the test
2. Insert control diskette
3. Perform re-IML
4. Return machine

Test Handling - Results

Screen displays:

[A] IBM MAINTENANCE AND SERVICE PROGRAM SELECTION

[B] CENTRAL COMPLEX TEST SELECTION

[C]

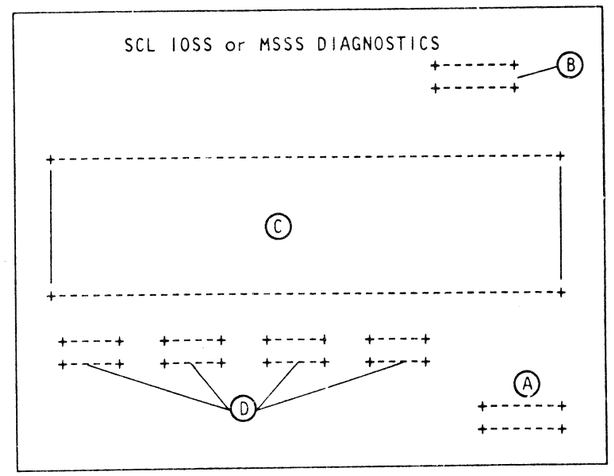

(A) Reference code
(B) Status of test
(C) Symptom code display field
(D) Run mode selection field

[D]

```
SCL MSSS DIAGNOSTIC

CE PANEL INDICATOR TEST

PRESS KEY B ON CE PANEL    DISPLAY SHOULD BE ** A A **
PRESS KEYS A+B ON CE PANEL DISPLAY SHOULD BE ** 5 5 **
```

Disk/Tape Inline Test - General

Before running the ILTs, read the following:

- Do not run other tests concurrent to the 'disk/tape inline' tests.
- Only one device and its controller can be tested at a time.

  1. On devices with a CE panel (for example, 3340), set the CE switch to CE mode.
  2. For 3340: Bring inset on the handle of the data module in 'write enable' position.

     For 3370: Set the Read/Write enable switch to the 'write enable' position.

- The device to be tested cannot be used by the customer and must be taken out of the operating system by respective control statements.

  If the customer program tries to access this device, the command will be terminated and 'Intervention Required' is indicated.

- ILT routines may consist of several tests, which run sequentially or can be executed separately, as required by the MAPs.
- Various run and control modes for execution can be selected, when told by the MAPs.
- Status messages will be updated in parallel at the screen and at the CE panel.
- By pressing MOD SEL or DIAG key, running ILTs are discontinued, for example, for man Ops. 3370 ILTs controlled by the MD cannot be discontinued, see 'Exceptions for 3370'.
  Note that the ILTs are not automatically restarted unless the ILT program is recalled by pressing the CHG DPLY or the CNCL key.
- Remote operator console support and remote ILT execution are mutually exclusive.

Exceptions for 3310

- Do not select an individual test of routine 71.
- Do not run routine 74 stand-alone.

Exceptions for 3340/3344

Inline Test Handling with String Switch Feature Installed

The 4331 processor supports the string switch feature only in static mode. This means that via the toggle switches A and B on the 3340 controller one interface has to be enabled while the other interface must be disabled.
The enabled string switch interface is then seized by the FTA of the 4331 processor with the first addressing of a 3340/3344 and remains in this state until power at the control unit is turned off.
Therefore the inline tests must be executed on the presently seized interface except for the Dynamic String Switch Routine B6.

Dynamic String Switch Routine

To test the string switch feature dynamically use routine B6.

1. No concurrent maintenance possible. All customer applications must be terminated which use the interfaces to be tested.
2. Press STOP key at the operator console keyboard.
3. Enable also the second interface (both switches A and B must now be set to 'enable'). Remember that the interface just enabled must be disabled again under item 5.
4. Run routine B6 as described in the 3340 MLM. Display of control information '8DFF' and '3FFF' is shown only on the 3340 CE panel.
5. After completion of routine B6 turn power off and set the interface switch which was enabled under item 3 to disable. Turn power on again. The enabled interface will be seized again with the first addressing of a 3340/3344 device.

Exceptions for 3344

Each 3344 device represents four logical 3340 devices. Each 3344 has therefore four logical 3340 addresses of which the lowest one is identical to the physical address of the 3344. To run ILTs on 3344 devices enter the lowest 3340 logical device address.

Example:

```
                 First device after the
                  3340 control unit
                         |
                         |----- OR -----+
                         |              |
                         V              V
                      3340-B2        3344-B2

String 0     X02     X03     X02      X03
                             X2A      X2B
                             X4A      X4B
                             X6A      X6B

String 1     X12     X13     X12      X13
                             X3A      X3B
                             X5A      X5B
                             X7A      X7B
```

X = Channel address

Disk/Tape Inline Test - General (continued)

Exceptions for 3370

The primary CE maintenance tool for the 3370 disk device is the Maintenance Device (MD). Only with the MD attached the complete 3370 diagnostics can be executed and errors or other information provided by the diagnostics can be analyzed. Therefore the MD should always be used if available. However the 3370 diagnostics can be run without an MD attached. In this case the diagnostics run in a limited version on a GO - NO GO basis, as a quick checkout if the device is working or not.

Caution: As long as the 3370 ILTs are controlled from the system console:

- Do not select any other routine than E0, EF, or FC.
- Use default run option only.
- Do not select control options 10, 20, 2X, and 37.

A violation of these rules may cause irregular results and can destroy customer data.

How to Select 3370 Inlines

After the device type and address have been entered as directed by item 3 on page 4410, the 3370 INLINE ROUTINE SELECTION menue is displayed. If an MD is available go to selection 'EF'. Without an MD available proceed with selection 'E0'. Notice the WARNING displayed on the lower part of the screen.

Selection of Routine-ID EF

1. If a MD is available, enter selection 'EF', press ENTER. Wait for CA ANSWER on line 23.
2. Now the system is ready to communicate with the MD. For MD setup see 3370 MIM MLX2 page Entry 3.
   For all further actions follow the instructions shown on the MD-display.
3. If no System - MD communication is possible (MD will timeout), the system console displays
   3370 C0 INVALID D0C00080
   on line 23.
   To recover proceed as follows:

MLX Exit 3
To page 4465

   Press the PF-key on the MD keyboard. Re-enter routine-ID 'EF' at the system console and run routine 'EF'.
4. Do not enter any input via the system console when the diagnostics are controlled by the MD. This would cause loss of synchronization and require a complete ILT restart.
5. Instruct the customer not to use 'customer man-ops' during run of 3370 ILTs. This would also cause a timeout of the MD and requires a complete ILT restart.
6. The message CA ANSWER on line 23 may be permanently displayed but should be ignored as long as the ILTs are controlled from the MD. The device tested must be in CE mode. Set/reset of the CE mode is controlled by the MD, see 'Selection of Routine-ID 'FC'.

Selection of Routine-ID E0

1. If no MD is available enter routine selection 'E0', press ENTER. Wait for CE ANSWER on line 23.
2. Press the CHG DPLY key to get the TAPE/DISK INLINE RUN/CONTROL OPTIONS displayed, see D on page 4415.
3. Press ENTER. The selected routine is started with the default run and control option.
4. Press CHG DPLY key again to release the screen to the customer. Routine selection E0 causes the routines E0, E1, E3, E5, E7 and EB to run in a chained mode on a GO - NO GO basis.
   Normal completion of this routine string causes
   3370 CF STOPPED D0EB0080
   to be displayed on line 23. This means the diagnostics run error-free.
   - At this point another device to be tested can be selected or the ILTs can be terminated. In both cases the CE mode must first be reset, see 'Reset CE mode'.
   - If during the routine execution an error is encountered the line 23 shows the message
     3370 E1 ERROR DEXXXX81
     Reset the CE mode, see 'Reset CE Mode', and terminate the ILTs. Call for an MD and run the diagnostics from the MD.

Selection of Routine-ID FC

Purpose

The routine string executed under selection 'E0' requires that the device to be tested is set to CE mode. Only one 3370 drive (address) per controller can be set to CE mode at a time.

Set CE Mode

For selection 'EF' CE mode is automatically set by the MD. For selection 'E0' CE mode is automatically set in routine E1 test 2.

Reset CE Mode

1. Enter routine selection FC, press ENTER. Wait for CA ANSWER on line 23.
2. Press CHG DPLY key to get the TAPE/DISK INLINE RUN/CONTROL OPTIONS displayed, see D on page 4415.
3. Press ENTER. The selected routine is started with the default run and control option.
   Normal completion of the routine 'FC' causes the display
   CF STOPPED D0FC0080
   on line 23 and a rezero operation to the tested device. This causes a device end interrupt to inform the system that the device is available again for the customer. Continue with step 4. If routine FC encounters an error, terminate the ILTs and call for an MD to run diagnostics from MD.
4. Terminate ILTs or select next device to be tested.

Disk/Tape Inline Test - General

Exceptions for 8809

- Before starting the tape inline tests insure that:
  1. A good scratch tape is loaded.
  2. The tape has been rewound to the load point.
  3. The tape drive is READY.

- Unless otherwise instructed by the MAPs, always run the Diagnostic Linked Series (DLS) starting with routine 40.

- In the reference code D8RRRR81 (line 23 on the screen) RRRR is the two-byte Isolation Code, where the left byte of RRRR indicates the routine identifier and the right byte indicates the stop code.

- Before terminating tape inline tests (Control Option 30) start test routine 6A, '8809 Termination'.

Disk Tape Inline Test

Test Handling - Actions

MLX Entry 11 From page 4465

Prerequisites

- Before starting any Disk/Tape Inline Test you should be familiar with the Inline Test General Description (see pages 4400 through 4402).
- IML must have been completed successfully with the control diskette (FU1) installed.
  Caution: Do not Re-IML when the customer is using the system at the same time.
- If the inline tests should run concurrently to the customer's application the device to be tested cannot be used by the customer. Ask the system operator to unassign the device.
- The disk/tape device must have been set up for testing as described in the maintenance documentation of the appropriate device.
- Initiation of the ILTs is only possible from the operator console; further operation may be controlled from the operator console, from the CE panel (for example, 3340), or from the maintenance device (MD) of 3370.

How to Select and Run Inline Tests

A detailed flowchart for 'Inline Test Handling' is shown on pages 4440 through 4460.

Note: In this procedure the word 'enter' always means that some data has to be typed in from the keyboard and then the ENTER key must be pressed.

1. Call M/S PROGRAM SELECTION by holding down the ALT key and pressing the DIAG key. Screen **1** is displayed.
2. Enter the selection code for 'DISK/TAPE INLINE'. Screen **2** is displayed.

   Note: If the microcode is located on a set of two diskettes you will be prompted to insert now the second diskette (FU2). After termination of the inline tests reinsert the first control diskette (FU1).

Test Handling - Results

Screen displays:

1 'IBM MAINTENANCE AND SERVICE PROGRAM SELECTION'

2

```
DISK AND TAPE INLINE TEST SELECTION

[ A ]                    [ X=UNIT  ]
                         [   A     ]

ENTER TYPE AND DEVICE ADDRESS (CUU)

SELECTION: 8_____
           B

                         DATA:   ADDR:

                                 ANSWER
```

A Shows all possible machine types for which the inlines apply.

B Field to enter machine type (take from **A**) and device address (CUU).

Example: Type 3340 = 2
CUU, for example = 200
SELECTION: 82200 _____

Test Handling - Actions

3. Select the device type code from field C. Enter the device type code and the physical device address in the selection field E. Screen 3 is displayed.

   For 3344 device address see 'Exceptions for 3344' on page 4400.

4. For 3370 devices further test handling is done from the maintenance device (MD), if available. (See 'How to Select 3370 Inlines', page 4401.)

   For devices other than 3370 continue here. Select the routine identifier from field C and enter it in the selection field D. (See 'Exceptions for...', page 4400 through 4402.)

   On the screen, lines 1-20 will change from DISK/TAPE INLINE RUN/CONTROL OPTIONS to the system message buffer (customer screen display).

5. Observe the status field J, and wait for message 'XXXX CA ANSWER XXXXXXXX'. (A layout of the status field is shown on page 4420.)

6. For a 3340/44 device further test handling can be done from the 3340 CE panel. For other device types continue with step 7.

7. Press CHG DPLY (change display) key. Screen 4 is displayed. You must always have this screen when you want to change run/control options.

   Note: The CHG DPLY key causes the screen display to change from the system message buffer to the DISK/TAPE INLINE RUN/CONTROL OPTIONS picture, and vica versa.

3

```
XXXX ROUTINE SELECTION

                    C

SELECTION: 8 D

J ------XXXX CA ANSWER XXXXXXXX
```

4

```
DISK/TAPE INLINE RUN/CONTROL OPTIONS

   E                F

DEFAULT RUN OPTION = 08                    K
*DISPLAY OF RUN INFO        SEL RUN OPT:08 CUU =XXX
*PREVENT / ALLOW PRESS PF4* RTN ID = XX OVY NR = ..
                            TST NR = .. OVY ID = ..
                L
SELECTION:00......          G
                            DATA:     ADDR:
H TEST
                J
```

C Menu of available inline routines for selected I/O.

D Enter field for the routine ID offered in C.

J Status and reference code

UUUU	IS	STATUS	UU RR RR XX	B1 B2 B3 B4
Unit Type ---- 3310 3340 3344 3370 8809	S T A T U S C O D E	Status Message	Reference Code	4 Bytes Additional Information

For details refer to page 4420.

E Table of all run options.

F Table of all control options.

G This part of the run parameters may be stopped to be displayed.

   See message L.

H Enter field for run and control options. Normally the selected control option (for example, 00) is displayed here.

J Status and reference code (see above table).

K Run parameter field. The shaded parts are parameters from the program. The other parameters had to be entered before and also can be altered during inline selection.

L Additional error bytes or run information.

Disk/Tape Inline Test (continued)

Test Handling - Results

8. At this point you can enter run/control options in the selection field **H**. If no option is entered, the default options will be used.
   Default options are:
   Run option = 08 (No loop, link, stop on error)
   Control option = 00 (start/stop diagn execution)
   For a description of run/control options, see pages 4425 through 4435.
9. Start test execution by pressing the ENTER key.
   Caution: Never press the START key at the 4331 operator console when inline tests are running stand alone (no operating system loaded). This will result in a hangup condition.
10. If the inline tests should run at the same time as customers programs, press CHG DPLY to display the system message buffer. The operator console is now available for the system operator.
    The status of the inline tests can be obseverved continuously in line 23 **J**. (A description of the status field is shown on page 4420.)
11. For any intervention to the inline operation (for example, stop inline test execution) you need the DISK/TAPE INLINE RUN/CONTROL OPTIONS picture displayed. Press CHG DSPY key, if necessary, to return to screen **4**.
12. Depending on the run option selected, the inline tests will run until:
    - The first error is detected or
    - The end of the routine(s) is reached or
    - The execution is stopped manually.

    If an error has been detected during test execution, a reference code is displayed in the status field **J**. Up to 15 additional error bytes (numbered 1 through 9 and A through F) may be displayed in field **L**. (Refer to the flow chart on page 4450, Entry E, for more detailed information about the display of the error bytes.)
    If you want to restart inline tests, enter control option 00 in the selection field **H**.
    If you want to stop or terminate inline tests, refer to 'How to Stop or Terminate Inlines' (see next page).

Test Handling - Results

4

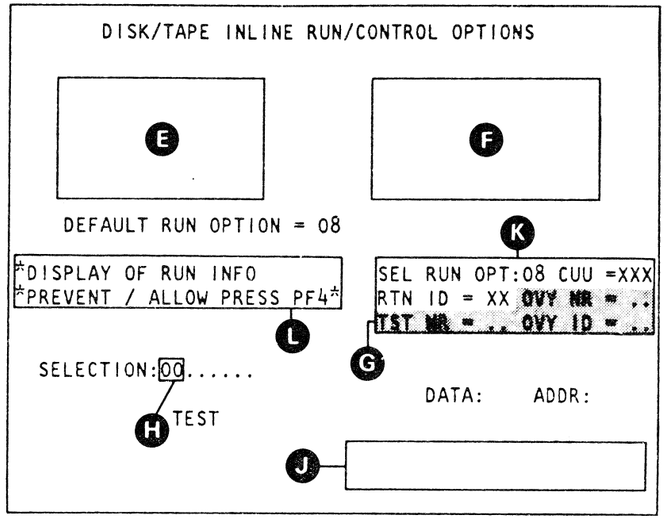

Example: Error Display for 3340

```
LU: 80009222

  D I S K / T A P E   I N L I N E   R U N / C O N T R O L   O P T I O N S

            RUN OPTIONS                          CONTROL OPTIONS
                                                  00 = START/STOP DIAGN. EXEC.
*01 = NO LOOP, LINK, BYP ERR STOP               *10 = START DIAGN. PARAM. ENTRY
*02 = LOOP + RTN, STOP ON ERR                   *20 = ADV ERROR/PARAM. DISPL.
*03 = LOOP + LINK RTN, BYP ERR STOP             *2X = SELBYTE X OFF ERROR/PARAM.DISPL.
*04 = NO LOOP, NO LINK, STOP ON ERR.            *30 = TERMINATE INLINE MODE
*05 = NO LOOP, NO LINK, BYP ERR STOP            *31 = I/O ADDRESS ENTRY (OC UU)
*06 = NO LOOP, LINK, BYP ERR STOP               *33 = CONCURRENT RUN RATE SEL
*07 = LOOP SINGLE RTN, byp ERR STOP             *33 = RESET ERROR LOG MODE
 08 = NO LOOP, LINK, STOP ON ERR                *36 = SET ERROR LOG MODE
 08 = DEFAULT RUN OPTION                        *37 = START DIAGN. PARAM. DISPL.
*XX = INVALID FOR 3370                          *3C = DISPL. ILT MNTR. REL LVL.
                                                *40.. FF = RTN. ID SELECTION

DIAGN  1  2  3  4  5  6  7  8  9  A  B  C  D  E  F  SEL RUN OPT: 08 CUU =210
ERROR 42 00                                        RTN ID = A2  OVY NR = 11
                                                   TST NR = 04  OVY ID = 01

 SELECTION: 00 . . . . . .
            TEST        370 TIMER: ON    DISK        DATA:     ADDR:
                        TOD: SEC
                                          3340 E1 ERROR   DAA2428100
```

E Table of all run options.

F Table of all control options.

G This part of the run parameters may be stopped to be displayed.

See message **L**.

H Enter field for run and control options. Normally the selected control option (for example, 00) is displayed here.

J Status and reference code (see page 4420).

K Run parameter field. The shaded parts are parameters from the program.
The other parameters had to be entered before and also can be altered during inline selection.

L Additional error bytes or run information.

J Status and reference code.

Disk/Tape Inline Test (continued)

Test Handling - Actions

How to Change the Run Option

If you are asked to change the run option type in the ID (E) of the option you want, behind SELECTION: Overwriting 00, press ENTER. The selected run option is then displayed in run parameter field (K) . 00 will again be displayed behind SELECTION.

For details refer to 'Run Options - Explanation' (page 4425).

How to Change the Control Option

If you are asked to change the control option, do the following:

1. Stop running inline if not yet stopped by pressing ENTER.

2. Enter control options and parameters as stated in the device - MLM, press ENTER.

For details refer to 'Control Options - Explanation'.

How to Stop or Terminate Inlines

1. Stopping of Inline Tests

   Enter run option 00 in the selection field (H) . This stops a running test, but does not terminate inline mode.

2. Termination of Inline Mode

   - Exception for 3370 Disk Inlines

     Before terminating 3370 Disk Inlines (control option 30) refer to 'Reset CE Mode', page 4401.

   - Exception for 8809 Tape Inlines

     Before terminating tape inline tests (control option 30), start test routine 6A '8809 Termination'.

   - To terminate inline mode any running test must be stopped first (see step 1). Then enter control option 30 in the selection field (H) . This terminates inline mode, resets the TEST indicator (line 21), and displays the system message buffer (customer screen).

     Note: If control option 30 fails to terminate inline mode, a 4331 hardware malfunction is suspected. In this case, the customer must terminate his programs and perform a system reset. Follow the reference code displayed.

   - If control diskette FU2 has been installed, insert control diskette FU1. Caution: Do not press the IML key.

     Any error log that occured while diskette FU2 was installed is stored on this diskette. Check diskette FU2 for new log entries.

   - Reset of CE mode for 3340/44

     Turn off the CE mode switch at the CE panel and press ATTENTION.

Disk/Tape Inline Test (continued)

Status Display Examples and Description

```
DISK/TAPE        INLINE   RUN / CONTROL   OPTIONS

RUN OPTIONS                          CONTROL OPTIONS
* 01 = NO LOOP, LINK, BYP ERR STOP   00 = START / STOP DIAGNOSTIC EXECUTION

08 = DEFAULT RUN OPTION              * 37 = START DIAGN PARAMETER DISPLAY
                                     * 3C = DISPL ILT MNTR REL LVL
* XX = INVALID FOR 3370              * 40.. FF = ROUTINE ID SELECTION

DIAGN   1  2  3  4  5  6  7  8  9  A  B  C  D  E  F   SEL RUN OPT : 08 CUU = 210
ERROR  20 00 26 83 64                                RTN ID = A1   OVY NR = 11
                                                     TST NR = 01   OVY ID = 01
SELECTION : 00.....
            TEST
                                 Line 23 ---> 3340 E1 ERROR   DAA1208100268364
```

Note 1:

'ANSWER' indicates that some CE action is required.

'ERROR' indicates that the disk/tape inline tests have detected a failure condition.

'INVALID' indicates that invalid data has been entered in the SELECTION-field.

'LOADING' indicates that the inline test routines are being loaded.

'RUNNING' indicates that an inline test is in progress.

'STOPPED' indicates that the test has successfully completed.

Note 2:

An unexpected failure condition was detected and has stopped test execution. This can be caused by a missing TAG VALID signal, for example.

Device	Inline Status	Status Message (Note 1)	Status or Reference Code	Additional Information Bytes				Meaning	Action
D D D D	I S	M M M M M M	U U R R R R X X	B0	B1	B2	B3		
X X X X	40 or 41	ANSWER	D 0 X X 0 0 8 0					Set error logging mode.	See control option 36 (page 4435 and 4460).
	42 or 43	ANSWER	D 0 X X 0 0 8 0					Reset error logging mode.	See control option 35 (page 4435 and 4460).
	50	ANSWER	D 0 X X 0 0 8 0					Concurrent run rate selection.	See control option 33 (page 4435 and 4460).
	6X	ANSWER	D 0 X X Y Y 8 0	YY	YY	YY	YY	Parameter display mode, YY = parameter bytes.	See control option 20 or 2X (page 4430 and 4455).
	70 or 71	ANSWER	D 0 X X 0 0 8 0					I/O address entry mode.	See control option 31 (page 4435 and 4455).
	82	LOADING	D 0 X X 0 0 8 0					Routing is being loaded.	None.
	8C	RUNNING	D 0 X X 0 0 8 0					Routine or test running.	None, or press ENTER to stop.
	8D	ERROR	D X X X Z Z 8 1	ZZ	ZZ	ZZ	ZZ	Dynamic error display, ZZ = error bytes.	None (see page 4425 'Dynamic Error Display').
	C0	INVALID	D 0 X X 0 0 8 1					Invalid keyboard entry.	See F on page 4450.
	CA	ANSWER	D 0 X X 0 0 8 0					Routine ready for execution.	See A on page 4440.
	CE	ANSWER	D 0 X X 0 0 8 0					Waiting for CE-intervention.	See B on page 4440.
	CF	STOPPED	D 0 X X 0 0 8 0					End of test (no error detected).	None, or restart, or terminate.
	DX	ANSWER	D 0 X X 0 0 8 0					Diagnostic parameter entry mode.	See control option 10 (page 4430 and 4455).
	E0	ANSWER	D 0 X X 0 0 8 0					ILT monitor release level display	See control option 3C (page 4435 and 4460).
	EX	ERROR	D X X X Z Z 8 1	ZZ	ZZ	ZZ	ZZ	Diagnostic error stop display, ZZ = error bytes.	Go to corresponding MAP.
	EX	ERROR	D X F F F F 8 1	ZZ	ZZ			Diagnostic error stop display, ZZ = error bytes.	Go to corresponding MAP (Note 2).
	F5	ERROR	D 0 X X 0 0 8 1					Program error stop display.	Go to corresponding MAP.

Run Options - Explanation

- Are offered by the 'Disk/Tape Inline Run/Control Options' picture.
- Allow selection of a particular routine run mode, if the default run mode ('08') is not desired.
- Selection of a run option de-activates the option previously selected.
- Selection is possible via operator console or via CE panel. Diagnostic execution must be stopped before.
- The selected run option is displayed in the field 'SEL RUN OPT.' of the 'RUN INFO' on screen.

Dynamic Error Display

- Run options 01, 03, 05, and 07 do not stop the test when an error is detected. Errors are displayed dynamically, while the test continues execution.

  The error status information is displayed as follows:
  Line 17 and 18 on the screen:
  The message DIAGN ERROR, and up to 15 error bytes.

  Line 23 on the screen:
  The inline status '8D', the message ERROR, and the reference code.

- In case of intermittend errors, the message ERROR (line 23) is replaced by the message RUNNING while the error status information (line 17 and 18) remains on the screen.
  CAUTION: The error status information will be reset when the loop is stopped (control option 00).

- The dynamic error display is also used for certain I/O device adjustments. As long as the adjustment is not satisfactory, the message ERROR is displayed (line 23). When the adjustment has been corrected, ERROR is replaced by RUNNING. In this case the error status information (line 17 and 18) is meaningless.

Run option (Hex)	Meaning of bits 4: Reset run options	5: Inhibit routine linking	6: Loop routine	7: Bypass error stop	Description		
01				X	Single execution	of a stand - alone routine or a linked series of routines	Dynamic error display
02			X		Looping	of a stand - alone routine or a linked series of routines	Stop on error
03			X	X	Looping	of a stand - alone routine or a linked series of routines	Dynamic error display
04		X			Single execution	of a stand - alone routine or any routine of a linked series of routines	Stop on error
05		X		X	Single execution	of a stand - alone routine or any routine of a linked series of routines	Dynamic error display
06		X	X		Looping	of a stand - alone routine or any routine of a linked series of routines	Stop on error
07		X	X	X	Looping	of a stand - alone routine or any routine of a linked series of routines	Dynamic error display
08 (default)	X				Single execution	of a stand - alone routine or a linked series of routines	Stop error

Disk/Tape Inline Tests (continued)

Control Options - Explanation

- Are offered by the 'Disk/Tape Inline Run/Control Options' picture.
- Allow selection of a particular control mode if the default control mode ('00') is not desired.
- Selection is possible via operator console or via CE panel. Diagnostic execution must be stopped before.
- Selection of a particular control option is indicated by an accompanying status display.

Opt.	*Name*	*Description*
00	Start/stop routine execution (default).	• Allows starting/stopping or restarting of diagnostic execution by pressing ENTER.
10	Start diagnostic parameter entry	• Allows entering of parameters to loop tests for scoping or to define seek addresses, etc. For details of parameters, refer to the routine description of the corresponding I/O manual. • *Parameters Selection for Test Run* If a routine consists of more than one test, the first diagnostic parameter allows to select different run modes of test execution: XX = first diagnostic parameter || ||- selects test number |-- selects test run parameter The following test run parameters are valid: Run Parameter | Meaning X'00' | Start routine execution with test 1 and run to end of routine (default). X'0X' | Loop test (X). X'2X' | Start routine execution with test (X) and run to end of routine. X'4X' | Start routine execution with test 1 and run to end of test (X) and loop test (X). X'8X' | Execute one pass of test (X). X'CX' | Start routine execution with test 1, run to end of test (X) and stop. If an invalid test number or a wrong run parameter is entered, the error code '01' is displayed. Example: DD710181.
20	Advance error/parameter display	1. If entered during status display 'CE ANSWER', the last error message will be retrieved and displayed in lines 17, 18 and 23. • The status display on the screen and in the Program Control Display of the CE panel will be 'E1'. • The first error message byte will be intensified in line 18, and will be displayed in the Data Display of the CE panel. 2. If entered during status display 'EX ERROR', the current error message on the screen will be repeated. • The status display on the screen and in the Program Control Display of the CE panel will advance to 'EY' (Y = X + 1). • The error mesage byte Y will be intensified in line 18, and will be displayed in the Data Display of the CE panel. 3. If entered during status display '6X ANSWER', the diagnostic parameter display on the screen will be repeated, and • The status display on the screen and in the Program Control Display of the CE panel will advance to '6Y' (Y = X + 1). • The diagnostic paramter byte Y will be intensified in line 18, and will be displayed in the Data Display of the CE panel. Note: Byte number X is advanced by 1 every time option 20 is entered until the end of the error message or the end of the diagnostic parameter display is reached. This is indicated by status 'CE' on the screen and in the Program Control Display of the CE panel.
2X	Select byte 'X' of error/parameter display	• To be used mainly for diagnostic execution via CE panel (like option '2U'). Allows selection of a particular error byte or parameter byte to be displayed. • The selected byte is displayed on the CE panel, and also on the screen as the first byte in the 'Additional Information Bytes' of the status field (line 23). The selected byte is intensified in the error/parameter record on the 'Run/Control Options' picture.

Control Options - Explanation (continued)

Opt.	*Name*	*Description*
30	Terminate inline mode	• Used to terminate inline testing of the selected device.
31	I/O address entry	• Used to select another device for inline testing, after testing of the previously selected device is finished. To run inlines subsequently for other devices (for example, during installation) use control option '31'. 1. Stop diagnostic execution by pressing ENTER. 2. Enter control option '31'. The status field 4 will ask for the channel portion of the I/O address. 3. Enter channel address, format '0C', 'C' is channel number (Example: '02' for 3310). The status field 4 will ask for device address of I/O device. 4. Enter the control unit and device address, format 'UU' Control Unit address Device address Example: '42' for 3310 The status field 4 will show 3310 CE ANSWER DO XXXX 80 indicating that the I/O address has been accepted.
33	Concurrent run rate selection	• Allows selection of a variable run rate for diagnostic execution concurrent to customer's application. The customer should be consulted before run rate selection because the run rate may influence the customer's system performance and the CE time to repair a device out of order. • Run rate options '00' to '08': 00 = Fastest diagnostic run rate with the greatest impact on system performance. 05 = Default run rate, set automatically during initiation of inline mode. 08 = Slowest diagnostic run rate with the least impact on the system performance. • The selected run rate has no effect if the PU is stopped or on nonconcurrent maintenance. *continues in next column*

Opt.	*Name*	*Description*
33		• Invalid run rate entries (higher than 08) will force automatically default run rate 05.
35	Reset error logging mode	• Resets logging mode for one device. Error logging mode set for other devices remains active.
36	Set error logging mode	• Allows logging of detailed sense information about successfully retried errors during customer operation. It is possible to set this option for more than one device in order to investigate device interrelationships. Once set, the option will remain set until a reset (control option 35) is issued or the machine is IML-ed. • If more than one device is to be set to this mode, the option must be applied separately for each device address. • **CAUTION**: 'Intervention Required' may be indicated if a device is selected for inline mode concurrent with customer operation. Therefore, notify the system operator that the selected device is temporarily not available for his application program. The customer can use the device again after you have terminated inline mode.
37	Start diagnostic parameter displays	• Allows displaying of the actual diagnostic parameters (default parameter or entered parameters) • If this option has been selected via the operator console, all parameters are displayed in the message area of the 'Run/Control Options' picture: Byte 0 in place of Error Code. Bytes 1 to 4 in the 'Additional Information' of the status field (line 23). Status '60' ANSWER is displayed. • The first byte is displayed in the 'Program Control Display' of the CE panel. To display additional bytes or to select a particular byte 'X', option '20' or '2X' may be selected. • If status '6X' is displayed, the 'X' corresponds to the parameter byte 'X'.
3C	Display ILT monitor release level	• Displays the release level of the PU part of the ILT monitor.
40 to FF	Routine ID selection	• When execution of a selected routine is completed, another routine may be selected by entering the routine ID.

Inline Test Handling

1. On devices with a CE panel (for example, 3340), set the CE switch to CE mode.
2. For 3340: Bring inset on the handle of the data module in 'write enable' position.

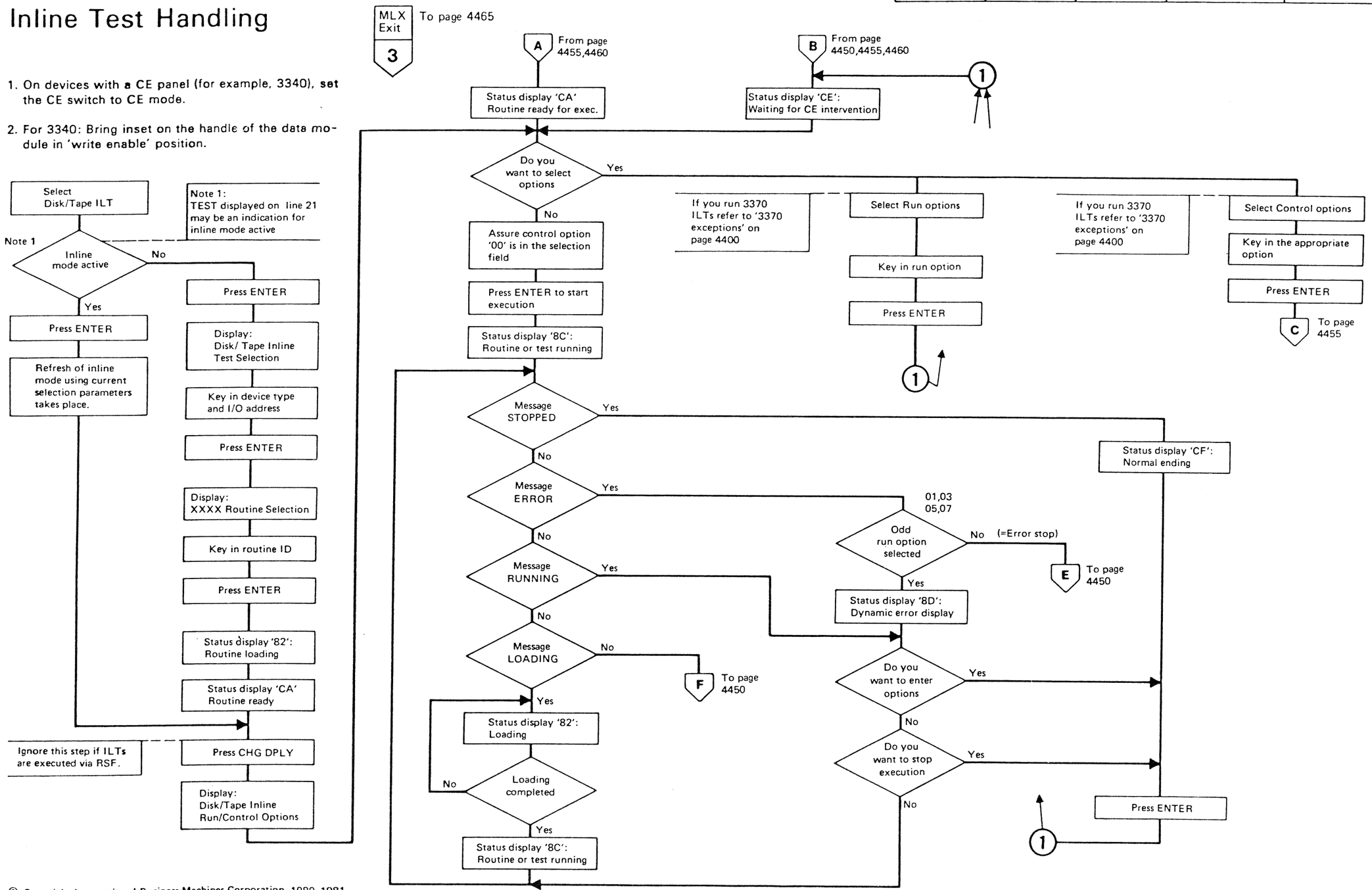

Inline Test Handling (continued)

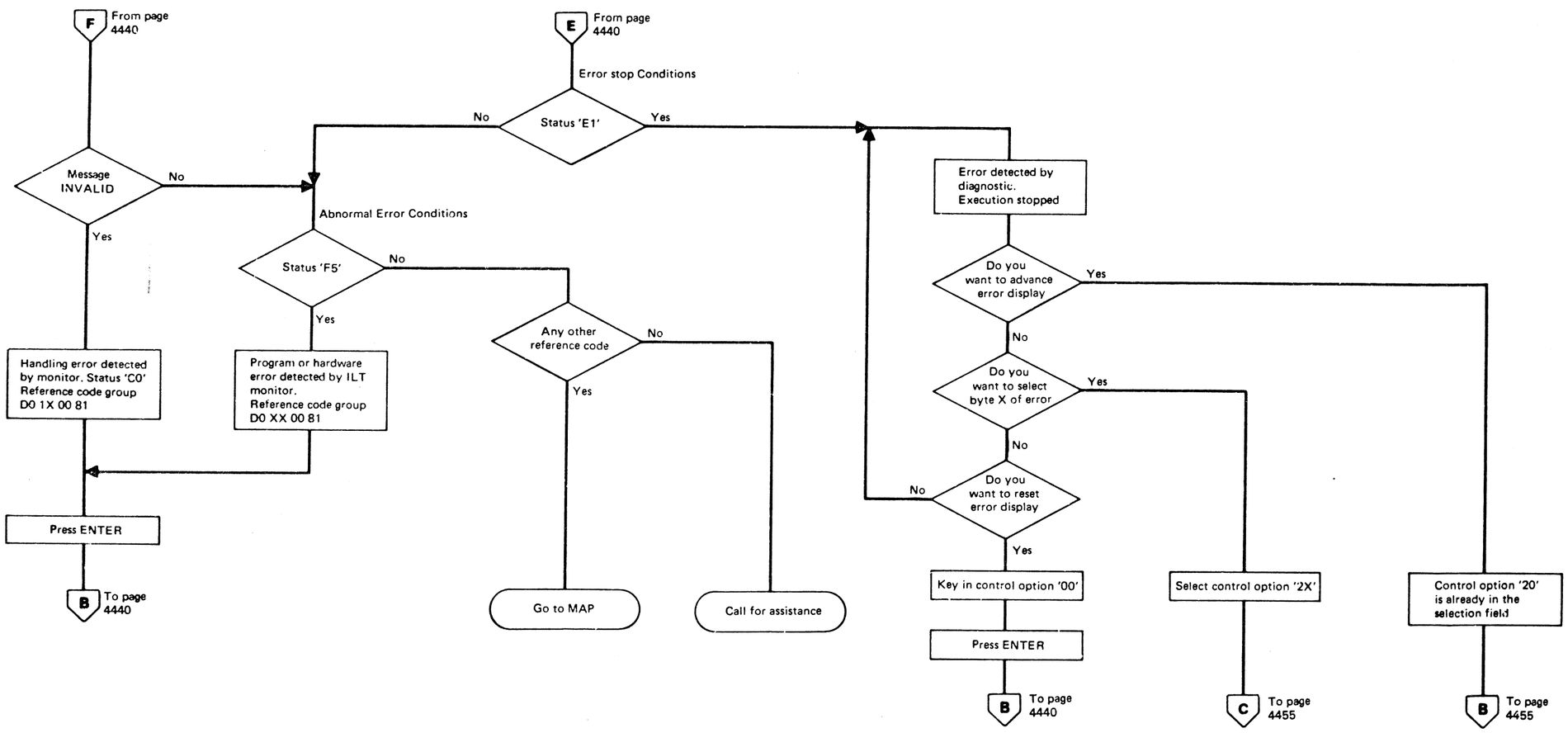

Inline Test Handling (continued)

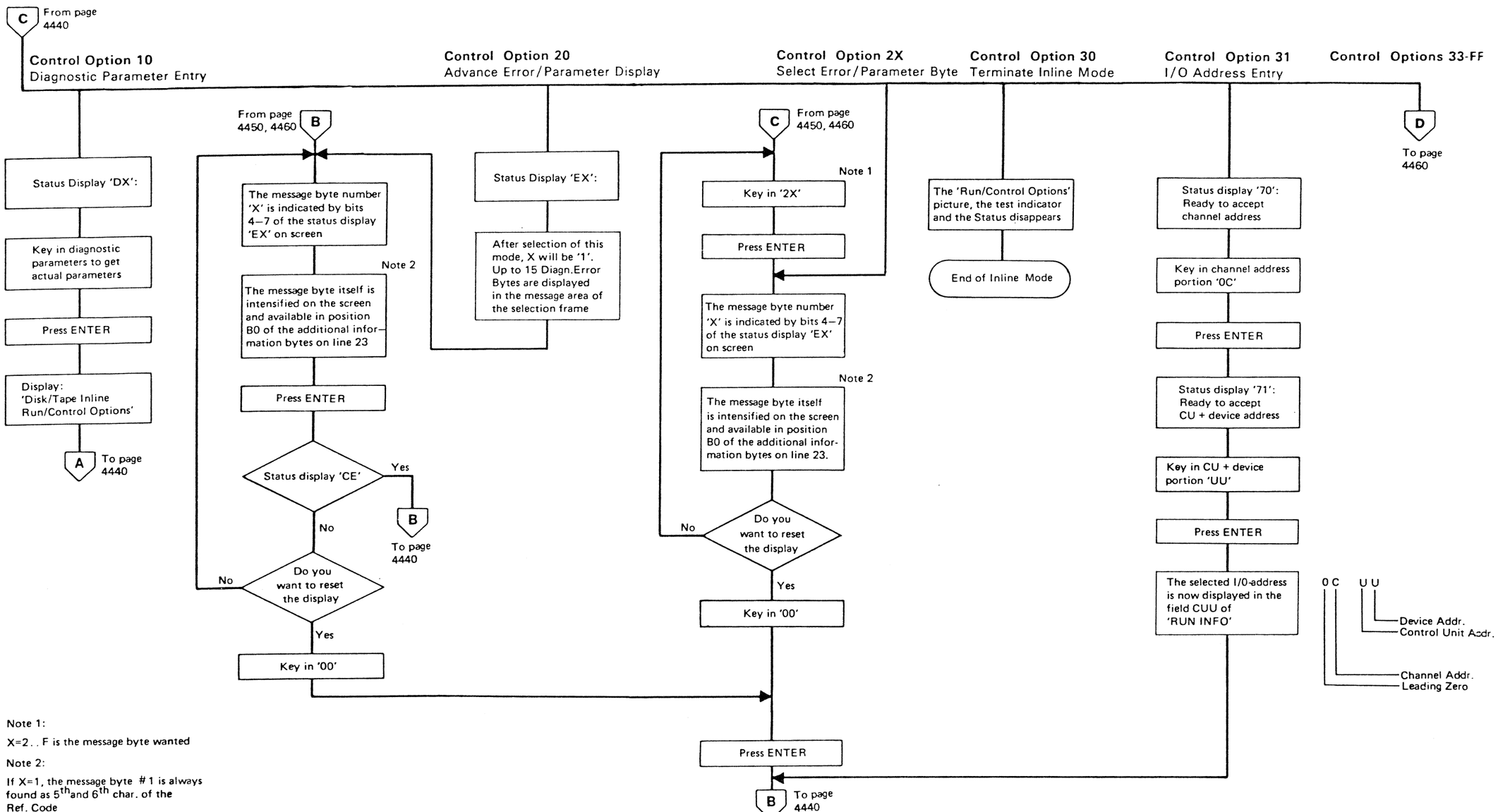

Note 1:

X=2..F is the message byte wanted

Note 2:

If X=1, the message byte #1 is always found as 5th and 6th char. of the Ref. Code

Example: D0A11081

1st message byte

Inline Test Handling (continued)

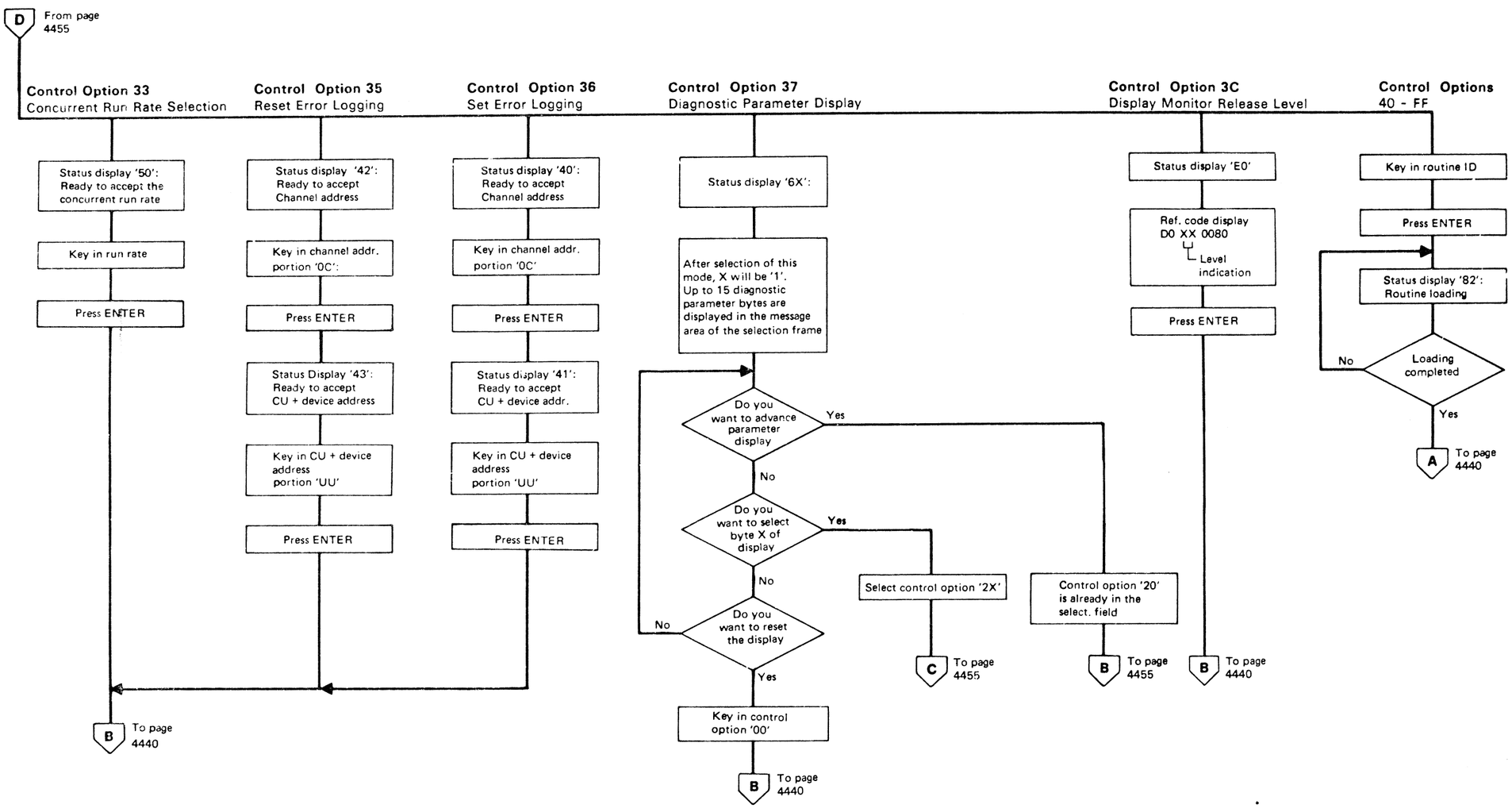

MLX Cross Reference

Outgoing References

Exit from 4331 Documentation	To	
	3340 MLM*/ 3344 MLM*	3370 MIM*
Page/Subject	Exit #	Exit #
MAP 0E00	1	1
MAP DA70	2	
MAP DE70		2
STM page 4440	3	
STM page 4411		3
STM page 4360 for 4331-1 and page 4355 for 4331-2 (Control Interface Test)		4

* Refer to the MLX pages of the referenced MLM/MIM.

Incoming References

Entry from 3340 MLM/ 3344 MLM	Entry from 3370 MLM/MD	To 4331 Documentation
Entry #	Entry #	Page / Subject
1		STM Disk Inlines
5,7,9,10, 11	1,2,3,4,5, 6,7,8,9	These entries are covered by reference codes. The reference codes given are direct entries to the respective 4331 MAPs. If no reference code is indicated go to the 4331 MAP 0000.
	11	Go to page 4410, 'Disk Tape Inline Test'
	12	See Note 1

Note 1: For editing and printing of logged records from the CE-cylinder of the 3370, use the 'combatibility feature environmental data edit program, DMPCECYL'. Use the description which is delivered together with the utility program 'IBM 2311/2314/3330/3340 Emulation on Fixed Block Disks',program number 5747-SA2.

Utilities Program Selection

```
+-----------------------------------------------------------------------------+
|                                                                             |
|  LV: 80239203            4331 UTILITIES PROGRAM SELECTION                   |
|                                                                             |
|          0 = MES UPDATE  (A)                7 = MCTF DISKETTE LOADER  (C)   |
|                                                                             |
|          1 = REMOTE SUPPORT  (B)            8 = RECORD DISPLAY  (D)         |
|                                                                             |
|          2 = MANUAL MCTF INSTALLATION  (C)  9 = DISKETTE IDENTIFICATION (E) |
|                                                                             |
|          3 = ALTER CHANNEL NUMBER )         A = COPY CONFIGURATOR  (A)      |
|                                                                             |
|          4 = FTA CONFIGURATOR     } (A)     B = DIAGNOSTIC COMMUNICATION (F)|
|                                                                             |
|          5 = BMPX CONFIGURATOR              C = TOD CORRECTION )            |
|                                                                             |
|          6 = HSC CONFIGURATOR               D = DISPLAYS AND PRINTERS } (A) |
|                                                                             |
| SELECTION:  C                                                               |
|                          4MB VSE TIMER:ON              DATA:        ADDR:   |
|                              TOD: SEC                                       |
|                                                                             |
| 0803                                                                        |
|                                                                             |
+-----------------------------------------------------------------------------+
```

(A) See Section 6

(B) See the following pages

(C) See page 4530 and following pages

(D) For use in case of support

(E) See page 4542

(F) See page 4543

Remote Support Facility

Tool Handling - Actions

Prerequisites

- The two RSF cards must be available in position 01A-A2W2 and 01A-A2X4. For switch setting, if an integrated modem card is plugged, see page 4503.
- For additional installation information refer to Installation Manual, page 2060.

How to Select Remote Console Support

RSF is on both the control and the diagnostic diskette.

1. Call M/S PROGRAM SELECTION [A] .
   Hold down ALT key and press DIAG key.
2. Key in selection for 'UTILITIES', press ENTER [B] .
3. Select REMOTE SUPPORT, press ENTER [C] .
4. Select CONSOLE SUPPORT, press ENTER [D] .
5. Give your input.
6. Now your system is to be remotely controlled.
7. Disconnect the remote link. Most connections will disconnect automatically; field (A) in line 25 disappears.
   A connection which does not disconnect automatically must be disconnected by pressing the ALT key and the INTERRUPT key at the same time on the operator's console.

Tool Handling - Results

Screen displays:

[A] IBM MAINTENANCE AND SERVICE PROGRAM SELECTION

[B] UTILITIES PROGRAM SELECTION

[C] REMOTE SUPPORT SELECTION

[D]

```
                          REMOTE CONSOLE SUPPORT

MACHINE-TYPE..: 4331                      CE - NAME.....: _ _ _ _ _ _ _ _
MACH-SERIAL-NO: xxxxx                     CUSTOMER-NAME.: _ _ _ _ _ _ _ _
BRANCH-OFFICE.: _ _ _ _                   CUST.TELEPHONE: _ _ _ _ _ _ _ _

REMOTE CONSOLE WITH '3275'...........(Y/N): _
VOICE TO DATA SWITCHING BY KEYBOARD(?/Y/N): _  <-(B)
LOW SPEED (600 BPS) WANTED...........(Y/N): _
INTEGRATED TEST (SEE NOTE)...........(Y/N): Y


   GIVE YOUR INPUT AND DEPRESS 'ENTER'

NOTE: FOR WT INTEGRATED MODEM (38LS) THE TEST MUST
      NOT BE EXECUTED IF THE HANDSET IS OFF HOOK !
==============================================================================
                                TIMER:OFF              DATA:     ADDR:
                             TOD:SEC
                                                   [          (A)          ]
```

(A) Indicator field in line 25.
For explanation see next page.

(B) By typing in a '?' the following picture appears

```
                          REMOTE CONSOLE SUPPORT
            +-----------------------------------------+
              VOICE TO DATA SWITCHING BY KEYBOARD (Y/N)
            +-----------------------------------------+

THE ANSWER TO THIS QUESTION SHOULD BE 'Y' IF ONE OF THE FOLLOWING SET-UPS
ARE INSTALLED AT THE MACHINE:

    . WORLD-TRADE INTEGRATED MODEM (38LS) WITH PSN-FEATURE (LINE-PLATE)
    . EXTERNAL MODEM (E.G.3976-3) WITH 'CONNECT-DATA-SET-TO-LINE'
      STRAPPING
    . ACOUSTIC COUPLER (E.G. UPAC/EPAC)

IN THESE CASES THE 'COMMUNICATION-REQUEST' BOTTON (ALT.REQ.) WILL SWITCH
THE DATA SET FROM VOICE TO DATA AND VICE VERSA.

PRESS 'ENTER' TO RETURN
```

Remote Console Support Indicator Field (Line 25, Pos. 65 - 80)

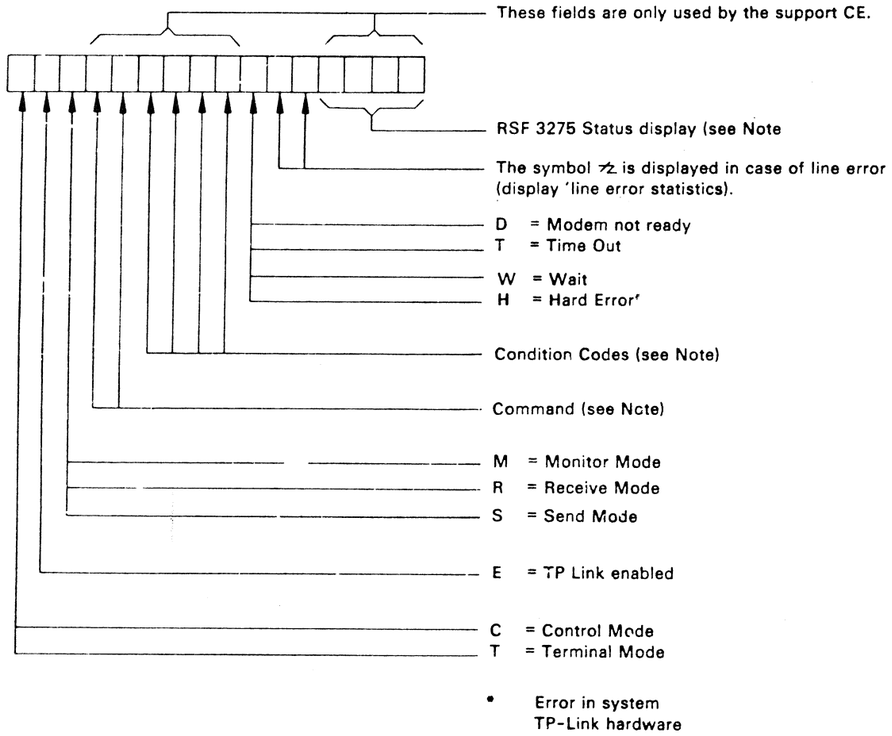

Note: If information is required, contact your specialist.

1) C 11
2) 5 x N, Enter
3) R 370 / R Enter

CEU 04 0240

RSF Adapter Interface Cards

The RSF consists of two cards, the 'Common Communication Adapter' (CCA) card and the 'Modem' card, or 'External Interface' card.

The RSF may have one of the following configurations:

CCA	MODEM TYPE	CD CODE	MODEM TYPE
With clock	Integrated Modem	CE 60 or SD 5	US SNAA
Card code SDI	Integrated Modem	CE 62 or SD8	WT SNAA
	Integrated Modem	CE 65 or SE 1	WT LL
	External-Interface EIA/CITT	SD3	Extern
PLug position 01A-A2W2	Plug position 01A-A2X4		

The integrated modem cards have two sets of eight rocker switches as shown in Figure A.

The switches A-H and I or R, depending on the modem card (see Figure B), are used for transmit level setup.

Switch Indentification

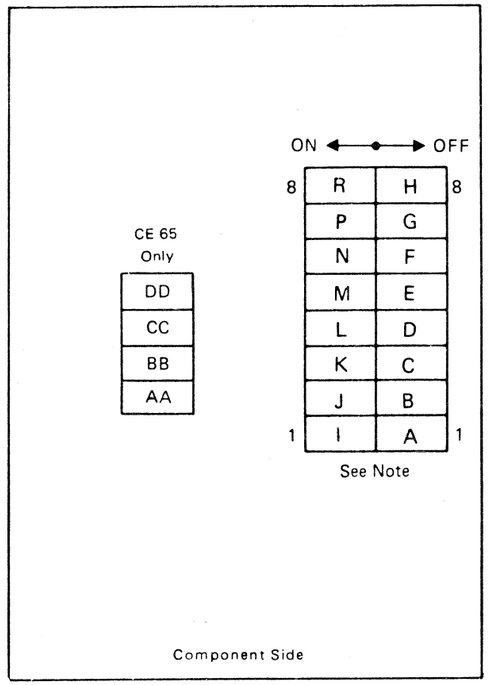

Note: Only the numbers 1 to 8 are shown on the card.
Figure A

Transmit Level Set-Up

Consult your telephone coordinator for the correct transmit level switch setting

Transmit Level Switches

R if CE 62 or CE 65
I if CE 60

DBM	A	B	C	D	E	F	G	H	R or I
0	I								
– 1		I							
– 2			I						
– 3				I					
– 4					I				
– 5						I			
– 6	I						I		
– 7		I					I		
– 8			I				I		
– 9				I			I		
– 10					I		I		
– 11						I	I		
– 12	I							I	
– 13		I						I	
– 14			I					I	
– 15				I				I	
– 16					I			I	
– 17						I		I	
– 18	I								I

1 = On
blank = Off

Figure B

External Modem Interface Card - EIA/CCITT V24

General Description

The EIA Interface Card is a 2W-3H Logic Card, which converts the VTL-levels of the CCA card to EIA/CCITT levels of the modem and vice versa.

Wrap

The wrap option 'card wrap' is jumpered to personalize the EIA card to respond to the card wrap test.

Card Wrap Test

If you select the 'integrated test' under REMOTE CONSOLE SUPPORT or the 'adapter test' under RSF DIAGNOSTICS, the following takes place (see also next page):

A command string is executed which performs:

a) A static CCA card test
b) A dynamic CCA card wrap test
c) A dynamic EIA card wrap test

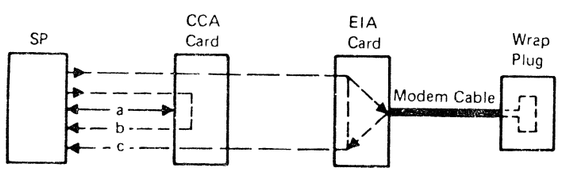

Note: If you execute the cable wrap test, the data path 'C' will then include the cable between the EIA card and the modem.

Jumper Setting

Wrap Options	JUMPERS A	B	C	D	E	F	G
Card Wrap	Remove	Remove	Remove	Install	Remove	Install	Remove

Note: The clocking (modem or CCA clock) does not affect the jumpering.

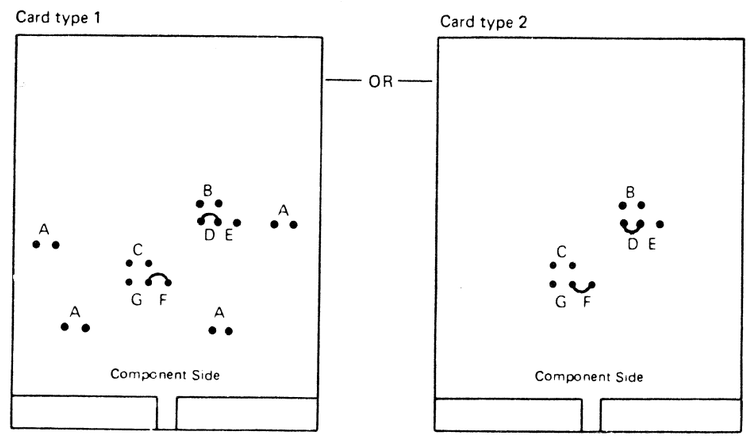

Voltage: Automatic voltage adaption.

For part numbers refer to plug list in binder MI 30

Signal Flow and Wrap Test in the External Modem Interface

(EIA Adapter Interface)

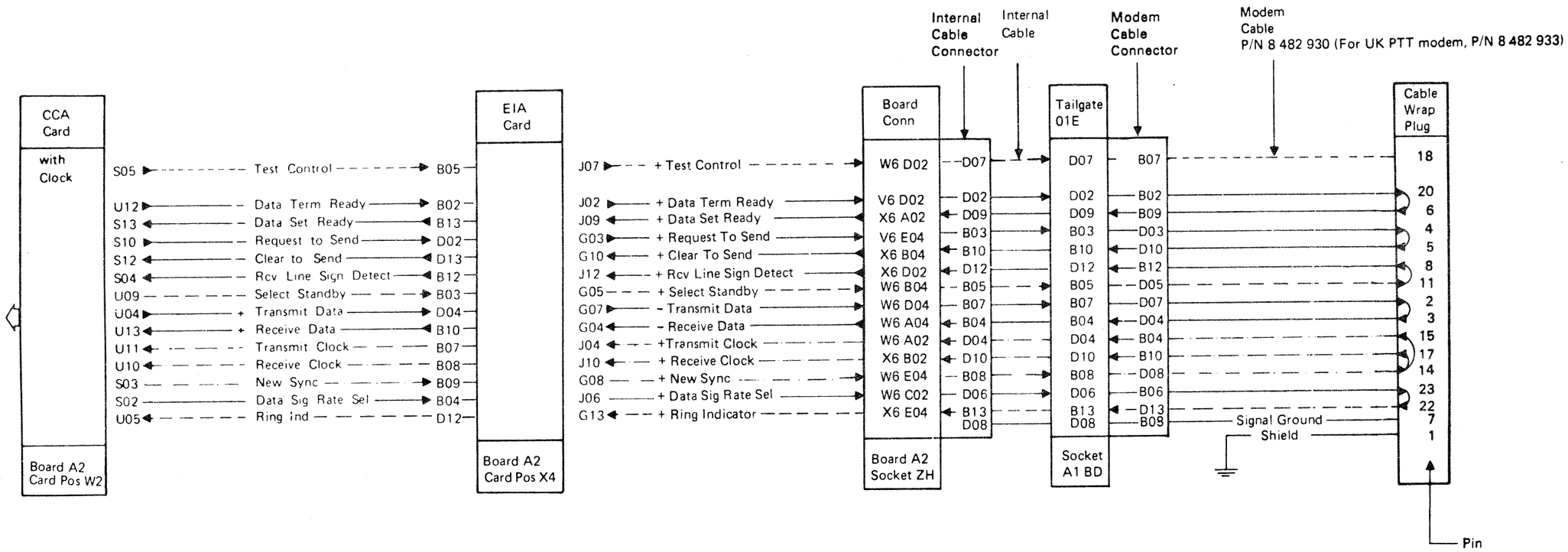

Signal Type	Meaning
————	These lines are used by the RSF function. They are tested during execution of the adapter test and the EIA cable wrap test (RSF-Diagnostics).
--------	These lines are used by the test function only.
____.____.	Not used.

Signal Flow in the Integrated Modem Interface

Modem Type: US Switch Network Auto Answer (US SN AA) Card Code CE 60 (SD5)

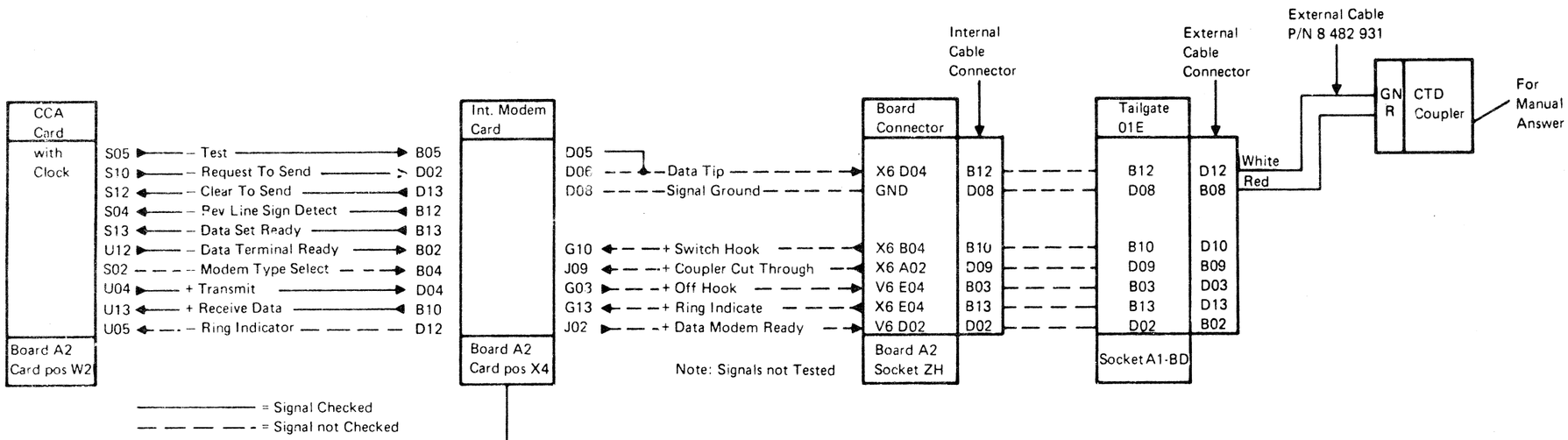

Note: Set the transmit level as specified by the telephone company. See 'Transmit Level Setup' on page 4503 for adjustment.

The following are obtained automatically:

- 2-wire line connection
- Clear to send delay 230 MS
- Echo Clamp 150 MS
- Signal threshold:
  ON at 43 dBm (10-20 ms delay)
  OFF at 48 dBm (5-15 ms delay)

US and Canada Modems Adjustments

Card Code	Modem Type	Line Type	Rocker Switch Setting						
			J	K	L	M	N	P	R
CE 60 or SD 5	US SNAA	Switched	OFF	ON	OFF	OFF	OFF	OFF	OFF

Signal Flow in the Integrated Modem Interface

Modem Type: WT Switched Network, Manual Answer (WT SNMA), Card Code CE 62 (SD8)

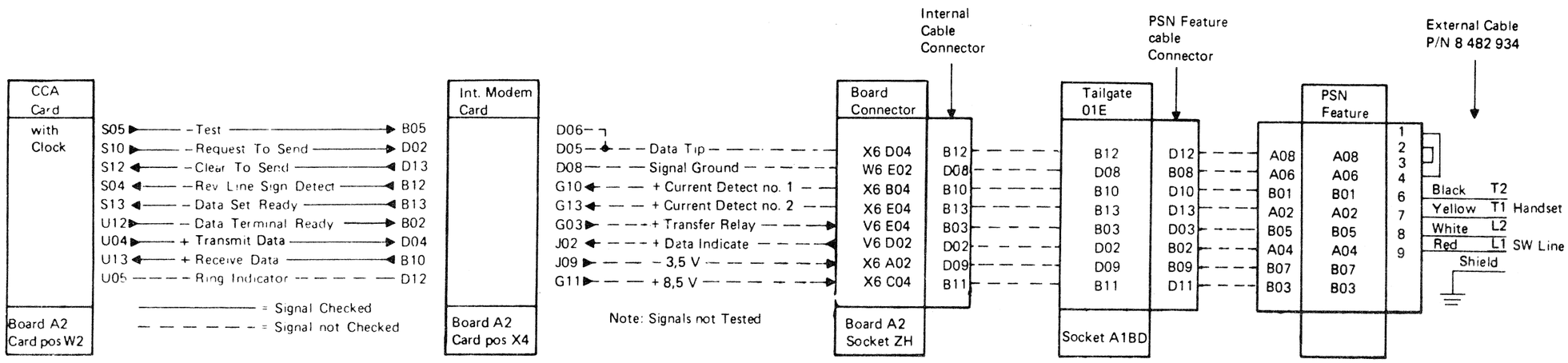

WT Modem Adjustment Procedure

1. Equalizer Setting (Receive Level)

Card Code	Modem Type	Line Type	Equalizer Switches I	J	K	L	M	N	P
CE62	WT SNMA	Switched Normal settings: ->	ON	ON	ON	OFF	OFF	ON	ON

The following are obtained automatically:

- Two-wire line connection
- Clear to send delay 230 ms
- Echo Clamp 150 ms
- Signal threshold:
  On at 43 dBM (10-20 ms delay)
  Off at 48 dBm (5-15 ms delay)

Note:
Equalizer switches
N - Normal Delay
J - High frequency delay
P - Mid frequency delay
I - Low frequency delay
M - HF amplifier boost

Switch off = delay enabled
Switch on = delay disabled

If unsatisfactory operation is encountered contact your TP specialist for specific information for your installation.

2. Transmit Level Setting

The switch setting for proper transmit level is shown in figure B on page 4503.

Jumper Setting on PSN Feature (Line Plate)

On the PSN (Public Switched Network) the jumpers A, G, K, M, and N must be plugged.

Note on Jumper A: The normal telephone DC voltage level supplied ranges from 26-50 V.

Note on Jumper G: If no telephone set is installed, plug jumper H instead of G.

Connect the DC voltmeter to TP1 and TP2 on the line plate, see Figure 1, to check the DC voltage.

If the supplied DC voltage deviates from the 'normal' range replug jumper A according to the table, Figure 2.

Line Plate

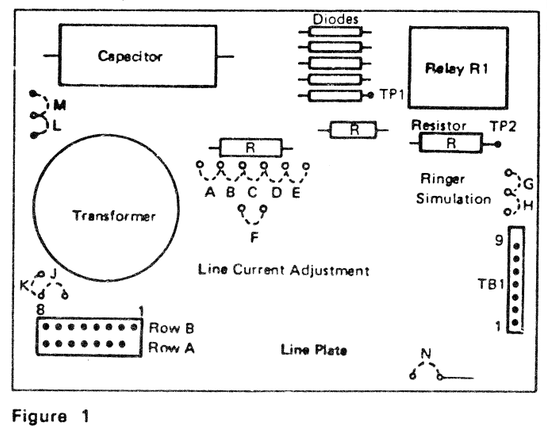

Figure 1

Voltage Level (V)	Jumper Setting
0.5 - 2	F
2 - 3.5	E
3.5 - 4	E
4 - 6	E
6 - 8	C
8 - 9	C
9 - 14	D
14 - 26	B
26 - 37	A) Normal
37 - 50	A)

Figure 2

Signal Flow in the Integrated Modem Interface

Modem Type: WT Leased Line (WT LL), Card Code CE 65 (SE 1)

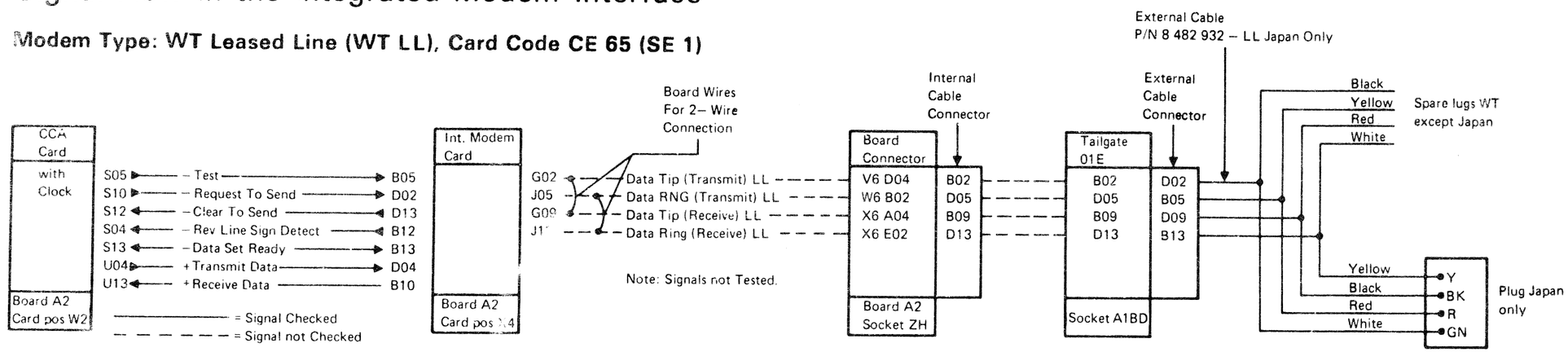

WT Modem Adjustment Procedure

1. Equalizer Setting (Receive Level).

See figure on the right side for proper switch setting.

Note 1: Equalizer Switches

CC - Normal delay
AA - Disable High Frequency Delay
DD - Disable Mid Frequency Delay
BB - Disable Low Frequency Delay
N - Disable HF AMP BOOST

If unsatisfactory operation is encountered on 'worst case' lines, the equalizer switches, AA, BB, CC, DD, and N should be set to off before setting any other equlizer switch.

Contact your TP specialist for specific information for your installation.

2. Transmit Level Setting

Note 2: Set the transmit level as specified by the PTT. See 'Transmit Level Setup' on page 4503 for adjustment. Contact your TP specialist for specific information for your installation.

Card Code	Modem Type	Line Type	I	J	K	L	M	N	P	AA	BB	CC	DD
CE65	WTLL	Leased 2-wire CTS = 30 MS Set Equalizer = Normal CTS = 80 ms CTS = 230 ms	OFF	OFF ON OFF	ON OFF OFF	X	ON	ON	OFF	ON	ON	ON	ON

See Note 1

Echo clamp setting :
ON = 50 ms delay
OFF = 150 ms delay

The following are obtained automatically:

- Signal threshold:
  On at –43 dBM (10-20 ms delay)
  Off at –48 dBM (5-15 ms delay)

RSF-Line Error Statistics

Purpose

Whenever a TP-link is established, a line error statistic is generated. This statistic records the total of send and receive operations and the total of errors which occurred during these operations.

The value of these statistic counters is stored in the support processor and can be displayed with the maintenance program selection 'Line Error Statistics'.

The statistics are generated for each individual TP-session (for example, Data Bank or Remote Console Connection), but the counters are reset at the beginning of each session.

How to Display the Line Error Statistics

The statistics can be displayed with either control or diagnostic diskette inserted.

1. Call the M/S Program Selection [A] .
2. Key in selection for UTILITIES, press ENTER [B] .
3. Select REMOTE SUPPORT, press ENTER [C] .
4. Select LINE ERROR STATISTICS [D] .

The statistics can be selected locally or from the remote location, even during a TP-session.

Line errors which occur during a TP-session are also indicated at the system screen picture. In this case the symbol ↯ is displayed in line 25 of the screen.

Screen displays:

[A] IBM MAINTENANCE AND SERVICE PROGRAM SELECTION

[B] UTILITIES PROGRAM SELECTION

[C] REMOTE CONSOLE SUPPORT

[D]

```
            REMOTE-SUPPORT LINE ERROR STATISTICS

NUMBER OF RECEIVE-OPERATIONS:  0000
NUMBER OF RECEIVE-ERRORS....  *0000*
NUMBER OF SEND-OPERATIONS...   0000
NUMBER OF SEND-ERRORS.......  *0000*

COUNTERS WILL BE AUTOMATICALLY ERASED WITH
THE NEXT TP-LINK-ENABLE.
PRESS ANY FUNCTION KEY TO RETURN TO THE SELECTION MENU
================================================================================
```

RSF - Diagnostics

Program Handling - Actions

Prerequisites

- Remote Support Facility must be installed.
- Control or diagnostic diskette inserted.

How to Select the RSF - Diagnostics

1. Call M/S program selection [A].
2. Key in selection for UTILITIES/REMOTE [B].
3. Select Remote Support [C].
4. Select Diagnostics [D].

How to Use the Individual Tests

The menu offers various tests to check out the remote support facility. Always run the adapter test first.

The selection menu remains on the screen when a test is selected. A status is displayed in field (A) and the message field (B) will display the result of the test. In some cases additional information is given in (B). Whenever a test has ended or is stopped, any test from the diagnostic menu can be selected just by entering the proper selection.

Adapter Test

Enter the proper selection in the selection field, press ENTER. The test starts to run displaying RUNNING in the status field and a message that the test has started [E]. The test cannot be stopped; however, after the test has ended you may restart it by pressing ENTER.

The test ends with SELECT in the status field and a message if the test has encounterd an error or not. [F]

Test Handling - Results

Screen displays:

[A] IBM MAINTENANCE AND SERVICE PROGRAM SELECTION

[B] UTILITIES PROGRAM SELECTION

[C] REMOTE SUPPORT SELECTION

[D]

```
                                                                    (A)
                                REMOTE   TP-DIAGNOSTICS                 SELECT
A = ADAPTER-TEST                          D = EIA(V24)-CABLE WRAP-TEST
B = SEND TEST-PATTERN (1200BPS)           E = SCOPE RECEIVED TEST-PATTERN (1200BPS)
C = SEND TEST-PATTERN ( 600BPS)           F = SCOPE RECEIVED TEST-PATTERN ( 600BPS)
R = RESET MODEM TO 'TALK-MODE'                (SELECTION 'R' FOR WT ONLY)

                                    (B)

SELECTION:
==============================================================================
```

(A) STATUS FIELD

(B) MESSAGE FIELD

[E]

```
R = RESET MODEM TO 'TALK - MODE'       (SELECTION 'R' FOR WT ONLY)
            >> ADAPTER-TEST STARTED...(RUNTIME =40 SEC) <<
            >> NOTE: FOR WT INTEGRATED MODEM (38LS) THE TEST MUST <<
            >>       NOT BE EXECUTED IF THE HANDSET IS OFF HOOK ! <<
SELECTION: A
==============================================================================
```

[F]

```
R = RESET MODEM TO 'TALK- MODE'    (SELECTION 'R' FOR WT ONLY)
            >> ADAPTER-TEST ENDED, NO ERROR FOUND<<
            >> NOTE: FOR WT INTEGRATED MODEM (38LS) THE TEST MUST <<
            >>       NOT BE EXECUTED IF THE HANDSET IS OFF HOOK | <<
SELECTION: A
==============================================================================
```

In case of error, see example printout of [F] on next page.

RSF Diagnostics (continued)

Sending a Test Pattern

This test allows you to send test patterns to a remote location for analysis.

You can choose between two selections to send a test pattern with 600 or 1200 BPS. Type in the proper selection and press ENTER. The test normally responds with message [H] .

If you have an external modem you must switch your modem to 'data' before starting the test, otherwise you get a message [G] .

The test sends a continuous test pattern until it is stopped by ENTER. The test pattern can also be altered. Stop test and press any PF-key. This causes the message:

SELECT NEW PATTERN: -

to be displayed above the selection field. Type in the new pattern and press ENTER. Any character can be entered but all non-hexadecimal characters are converted into hex characters. The character actually sent is indicated in message [H] .

A typical test pattern would be X'AA'.

or X '55'

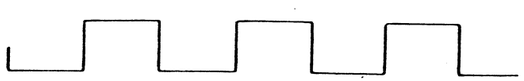

All other characters generate non-regular waveforms.

[F] (continued)

```
>>ADAPTER-TEST ENDED <<
>> NOTE: FOR WT INTEGRATED MODEM (38LS) THE TEST MUST <<
>>       NOT BE EXECUTED IF THE HANDSET IS OFF HOOK!  <<
     ** HARDWARE ERROR, SEE REFCODE FOR DETAILS **
```

[G]

```
R = RESET MODEM TO 'TALK-MODE'       (SELECTION 'R' FOR WT ONLY)
                   ** DATA-SET NOT READY, SWITCH MODEM TO'DATA' **
SELECTION: B                >> PRESS 'ENTER' TO STOP THE TEST <<
==========================================================================
```

[H]

```
R = RESET MODEM TO 'TALK-MODE'       (SELECTION 'R' FOR WT ONLY)
             >> NOW SENDING CONTINUOUS X'AA'-PATTERN (1200 BPS) <<
               (PRESS ANY PF-KEY TO CHANGE THE SEND PATTERN)
SELECTION: B        >> PRESS 'ENTER' TO STOP THE TEST <<
==========================================================================
```

Receiving a Test Pattern

This test allows you to receive a test pattern from a remote location. See also use of acoustic coupler.

Two selections are available to receive the test pattern on either 600 BPS or 1200 BPS. For this test a jumper has to be installed. The first display after the test has been selected [J] tells you the jumper position. Do not forget to remove the jumper at test completion. The test runs continuously but can be stopped/restarted any time by pressing ENTER.

The test pattern received is displayed on the screen together with an 'should be' value and tolerance limits [K]

Use of the Acoustic Coupler

If available the EPAC (european portable acoustic coupler) can be used or the UPAC (for US only) to generate the remote signal.

Insert the silent handset of your data phone in the EPAC or UPAC and turn the switch to 'test mode'.

Resetting the Modem to Talk Mode

To switch yourdata set back from data mode to talk mode enter the selection for 'Reset Modem to Talk Mode' and press ENTER.

[J]

```
R = RESET MODEM TO 'TALK-MODE'        (SELECTION 'R' FOR WT ONLY)
>> TO SCOPE A TEST-PATTERN ON THE LINE, JUMPER 01A-A2w2-U05 TO U13. <<
1200BPS-SCOPE STOPPED                  (REMOVE JUMPER AFTER SCOPING)
NOT TRIGGERED
|....:....|....:....|....:....|....:....|....:....|....|41.6 US PER DIV
```

[K]

```
                                  (C)
600BPS-SCOPE STOPPED <---┘
(D)-->Not TRIGGERED
!....:....!....:....!....:....!....:....!....:....!....<==83,3 US PER DIV <--(F)
(E)
----------||||||||||||||||||||||||_____________<==ACTUAL SCOPE
----------||||||||||||||||||||||||_____________<==EXPECTED SCOPE
          >....<            >....<              <==JITTER RANGE
SELECTION: F
==================================================================================
```

(C) This line displayes the selected speed of the test, and in this example the test is stopped.

(D) Indicates if the received signal is triggered or not.

The trigger point is the slope from 'mark' to 'space'.

```
      MARK
      -----        -----        -----
     |    *|Space|     |     |
-----     *  -----       -----
        *TRIGGER POINT
```

This means if you receive a signal with all marks or all spaces the signal would not be triggered.

(E) The center line shows the expected slope picture of the received signal. The upper line shows the actual received signal. This signal should match with the expected one with variations allowed on both ends, indicated by the outer range on the lower line.

(F) Time scale in connection with signals displayed (E).

```
..|....:....|..
  ↑
  └--One interval=41,6ms if 1200 BPS or
     83,3m  if  600 BPS
```

RSF - Diagnostics (continued)

Cable Wrap Test for External Modem EIA (V24)

This test allows you to check out the interface to the external modem.

The prerequisite for this test is an an errorfree run of the adapter test.

Enter the proper selection and press ENTER. This causes picture [L] to be displayed. Now install the wrap connector and press ENTER. Test starts and the screen displays picture [M] showing the signals wihich are tested.

The test runs continuously allowing the CE to probe the signals if an error is indicated. Test must be stopped by pressing ENTER.

[L]

```
R = RESET MODEM TO 'TALK-MODE'       (SELECTION 'R' FOR WT ONLY)
              >> THIS TEST CHECKS EXTERNAL MODEM CABLE ONLY.   <<
              >> (PREREQUISITE: ERROR FREE RUNNING ADAPTER-TEST)<<
              >> INSTALL WRAP CONNECTOR AND PRESS 'ENTER'.     <<
SELECTION: D
==========================================================================
```

[M]

```
R = RESET MODEM TO 'TALK-MODE'
                          >> CABLE-TEST ENDED    <<
                          >> NO ERROR FOUND      <<
```

Or in case of error:

```
R = RESET MODEM TO 'TALK-MODE'       (SELECTION 'R' FOR WT ONLY)
                          >> CABLE-TEST ENDED    <<
 SIGNAL| EIA | BOARD |TLGTE| MDM|    | MDM|TLGTE| BOARD | EIA | SIGNAL
  (OUT)| CRD | CNCTR | O1E | PLG|    | PLG| O1E | CNCTR | CRD |  (IN)
-------|-A2X4|--A2ZH-|A1BD-|-PIN|---|-PIN|A1BD-|--A2ZH-|-A2X4|--------
 + DTR | J02 | V6D02 | D02 | 20 |-->|  6 | D09 | X6A02 | J09 | DSR +
 + RTS | G03 | V6E04 | B03 |  4 |-->|  5 | B10 | X6B04 | G10 | CTS +
 + SSB | G05 | W6B04 | B05 | 11 |-->|  8 | D12 | X6E02 | J12 | DCD +
 + DRS | J06 | W6C02 | D06 | 23 |-->| 22 | B13 | X6E04 | G13 | RI  +
 + TD  | G07 | W6D04 | B07 |  2 |-->|  3 | B04 | W6A04 | G04 | RD  -
 ---------------------------------------------------------------------------
              + = APPROX. +6V      - = APPROX. -10V OR FLOATING
              **  HARDWARE ERROR, SEE REFCODE FOR DETAILS **
 SELECTION: D
 ==========================================================================
```

(G) This line shows an error. The signal TD (Transmit Data) was sent out with a + level but returned as RD (Receive Data) with - level.

(H) For signal names refer to page 4505.

Temporary Storage and Display of Data Bank Information

Program Handling - Actions

Purpose

This function allows to store up to 20 screen pictures onto the diagnostic diskette for retrieval.

Each time a new data bank connection is established, the data retrieved is stored starting in position 1 of the 20 position storage area, thus overwriting the information received during the last data bank connection.

How to Store Data Bank Information

1. Insert diagnostic diskette into system drive.
2. Establish data bank connection. Information retrieved from the data bank may be stored picture by picture pressing the COPY key. The Copy-key function causes at the same time a printout, if a console printer is attached.

How to Display the Stored Data Bank Information

1. Call M/S Program Selection [A]
2. Key in selection for UTILITIES [B]
3. Select REMOTE SUPPORT [C]
4. Select REF CODE FIX DISPLAY [D]

Press ENTER after picture D appears on the screen. This displays the first picture of the stored data bank information. Use the Copy-key function to get a printout on the console printer, or use the FRIEND PRINT LOG function. Press ENTER to get next picture displayed, and so on until the message ALL SCREENS DONE is displayed.

Program Handling - Results

Screen displays:

[A] IBM MAINTENANCE AND SERVICE PROGRAM SELECTION

[B] UTILITIES PROGRAM SELECTION

[C] REMOTE SUPPORT SELECTION

[D]
```
*** REF-CODE FIX DISPLAY ***

TO PRINT THE SCREENS STORED BY
REMOTE ACTIVITIES THE COPY PRINTER
MUST BE ACTIVE OR FRIEND MUST BE SET UP
TO PRINT THE SCREEN.

PRESS ENTER TO START, THEN ENTER FOR NEXT DISPLAY.
PRESS COPY KEY TO PRINT.
FOR IRECA UPDATE OR
MCTF LOCATE PRESS PF1      See Note
```

Note: For installing a IRECA update or MCTF received from a data bank refer to page 4517.

FRIEND PRINT LOG Function

Use this function to get a copy printout of the screen display on a channel-attached printer. Proceed as follows:

1. Perform system IML with the control diskette (if not done before).
2. Perform system reset clear (manual operation selection 'C').
3. Change diskette - insert the diagnostic diskette.
4. Call M/S Program Selection, key in selection for FRIEND.
5. Wait until 'FRIEND LOAD IS COMPLETED' is displayed on screen.
6. Change diskette - insert the control diskette.
7. Perform 'Program Reset' (manual operation selection 'P'), then
   - Press CANCEL key
   - Press START key
   - Press ENTER

   The FRIEND picture is now displayed.
8. Enter the secondary printer address together with the keyword LOG separated by a comma; for example, 2E,LOG.
9. Press ENTER.
   The intensified display PRNTLOG is shown in the status field.
10. Select screen image or log picture to be printed. Press the COPY key to get a copy printout. For every screen display you want to copy, the COPY key must be pressed again.

To restart the FRIEND after the PRNTLOG function, insert the control diskette, call the MODE SELECTION picture and perform:

1. Program Reset
2. Program Restart

You may now proceed with any other FRIEND function or if you want to use PRINT LOG again, continue with item 8 of the described procedure.

How to Install an IRECA Update or MCTF Received from a Data Bank

Purpose

With the help of utility programs it is possible to retrieve 'fix-data' from a data bank, see 'Temporary Storage and Display of Data Bank Information'. The utility program REF-CODE FIX DISPLAY offers a subselection which allows you to search the received data for any IRECA update or MCTF. If an IRECA update or MCTF is found it can be directly written onto the proper diskette by applying the following procedure.

Handling Procedure

1. Insert the diagnostic diskette on which the data bank information is stored.

2. Call M/S Program Selection

3. Key in selection for UTILITIES

4. Select REMOTE SUPPORT

5. Select REF-CODE FIX DISPLAY
   Press PF1 to locate first IRECA update or MCTF. The program searches the data received from the data bank for any IRECA update or MCTF. The first update found is displayed together with the message

   PRESS PF1 FOR MCTF/IRECA UPDATE; OR PF10 TO CONTINUE

   Press PF1 to update IRECA with the displayed data or to install the displayed MCTF.
   Press PF10 to continue to search the received data for the next IRECA update or MCTF.
   To install a located IRECA update or MCTF proceed as follows:

For IRECA Update

6a After you have located the desired update, press PF1. You are then prompted to insert the correct diskette (DD1 for 4331-1 or DD2 for 4331-2). Insert the diskette to be updated, press ENTER. The corresponding update program is called and the update is stored without further manual intervention. After the completion of the update, the REF-CODE FIX DISPLAY program changes automatically to the IRECA program.
If more than one update has to be installed, repeat procedure starting with item 2.

For MCTF Update

6b After the desired MCTF is located press PF1. You are then prompted to insert the correct diskette. Insert diskette to which the displayed MCTF applies, press ENTER. The MANUAL MCTF INSTALLATION picture is called with the MCTF information you want to install.Before the program stops it executes a 'diskette read/write test'. A message is displayed asking you not to interrupt the test. When the test stops the selection for storing a MCTF is already entered in the SELECT field by default. Press ENTER to store the MCTF.
If more than one MCTF has to be installed repeat the procedure starting with item 2.

7. Perform IML before the machine is returned to the customer.

Manual MCTF Installation

```
+-----------------------+
| Tool Handling - Action |
+-----------------------+
```

Prerequisites

1. IML of support processor complete.
2. Link list available.
3. MCTF data available.

How to Select the Manual MCTF Installation Display

1. Insert diskette on which a MCTF has to be installed. The MCTF installation program resides on both the control and the diagnostic diskette.
2. Call MAINTENANCE/SERVICE PROGRAM selection. [A]
3. Key in selection for UTILITIES. [B]
4. Select MANUAL MCTF INSTALLATION. [C]

Selection Menu

The MCTF installation screen offers 5 subselections. These are:

- STORE
- DISPLAY
- ERASE ALL
- ERASE MCTF NUMBER
- PF12 CANCEL

Enter the appropriate selection behind 'SELECTION'. Then follow the individual description.

How to Install a MCTF Manually

1. Select STORE. The cursor moves to the first entry field. Enter the MCTF data as received and press ENTER.
   Any typing error will result in an error message after pressing ENTER. [D]

   Does the screen show a reference code?
   If 'YES' enter the correct MAP.
   If 'NO' continue procedure.

2. File the MCTF data (or a copy) in the machine history.

3. Record the MCTF number of the installed MCTF in the link list, Section F.

4. Install MCTF also on the backup diskette (control diskette only).

Repeat Function

After a MCTF has been stored the message
MCTF STORED (REPEAT MCTF = PF3)
is displayed. If the same MCTF has to be installed on another diskette, insert this diskette and press PF3.

How to Display an Installed MCTF

Select DISPLAY. You may now enter a specific MCTF number then press ENTER. The MCTFs are displayed one after the other, beginning with the selected or the oldest one and ending with the most recent MCTF. If a MCTF was just entered the display starts with this one. The MCTF display picture has the same format as picture C.

Display is terminated by PF4 key or after all MCTFs have been displayed.

How to Erase an Installed MCTF

Two modes are available:

- Erase a single MCTF by number
- Erase all MCTFs

Erase a Single MCTF

Select ERASE MCTF NUMBER and specify MCTF number, press ENTER. The original data is restored in the load module.

Erase all Installed MCTFs

Select ERASE ALL, press ENTER. All MCTFs are erased. Also the MCTF log area is cleared.

Cancel Function

A MCTF which had been entered but was not accepted by the system can be cancelled by pressing PF12 thus clearing the screen for new data entry.

```
+-----------------------+
| Tool Handling - Results |
+-----------------------+
```

[A] IBM MAINTENANCE AND SERVICE PROGRAM SELECTION'

[B] UTILITIES PROGRAM SELECTION

[C]

```
+-----------------------------------------------------------------------------+
|  E1PT03 80267163            MANUAL MCTF INSTALLATION                        |
| MCTF NUMBER:  P417UC04                  ** EXTERNAL REFERENCE **            |
| LOAD ID:      0118                      LOAD ID:       0119                 |
| CSECT ESID:   0004                      CSECT ESID:    0009  (X)            |
| MEMBER NAME:  BBDMEW01-08               MEMBER NAME:   BBDFHC10-03          |
| ASSEMB.ADDR:  000000                    ASSEMB.ADDR:   0000FE               |
| CROSS-CHECK:  000001 = 019F             CROSS-CHECK:   0000FE = 011F        |
| HASH-TOTAL:   F139                      OFFSET:        0100  (Z)            |
|                                                                             |
| MCTF:    *0001=60Z(1,3)..............................................       |
|          ..............................................................     |
|          ..............................................................     |
|          ..............................................................     |
|          ..............................................................     |
|          ..............................................................     |
|          ..............................................................     |
|          ..............................................................     |
|                                                                             |
| 0 = STORE   1 = DISPLAY   2 = ERASE ALL   3 = ERASE MCTF NUMBER             |
|         CANCEL = PF12                  MCTF STORED   (REPEAT MCTF = PF3)    |
| SELECTION: 0                                                                |
|                            370 TIMER:ON                DATA:        ADDR:   |
|                            TOD:SEC                                          |
| 1F05                                                                        |
+-----------------------------------------------------------------------------+
```

[D]

Possible Error Messages

UPDATE AREA OVERFLOW
PARAMETER WRONG OR NOT FOUND
CROSS-CHECK MISMATCH
MCTF ALREADY INSTALLED
INVALID SELECTION
TYPING ERROR (WRONG HASH)

The cursor is positioned under the beginning of the field in error.

Manual MCTF Installation (continued)

How to Read and Identify the Link List-General

The link list you receive with your diskette is a unique list which can only be used with this diskette.

The pages of the list are sequentially numbered, but the list is also divided into sections. These sections are identified by a letter behind the page number.

How to Identify the Link List and the Diskette

The header page (section A page 1) of the link list contains most of the information needed to identify the link list, see Figure 1, page 4532. The following information must compare on the diskette label and on the link list header.

(A) EC number
(C) Machine serial number
(D) Link date on the diskette label and time on the link list

How to Identify the Link List

Check the volume ID on the header page: (E)

FU = Control (Function) diskette link list
DD = Diagnostic diskette link list

How to Identify the Diskettes

a) Check the load volume ID: (F)

XXX
- Load volume sequence number
- DD = Diagnostic diskette
  FU = Control (Function) diskette

b) Check field (G) . This field shows the sequence number of the diskette set.
For example:

Disk	1	2	
	FU1 1	FU2 1	(F) (G)

In this example the total micro code is written on two diskettes (F) . Both diskettes are considered as one group set. This is indicated by the sequence number 1 (G) . The duplicate set (only for control diskette) is identified by the sequence number 2. The diagnostic diskette shows the sequence number 3.

Which Patches are Applied to the New Diskette EC

Check Section F of the new link list. All MCTFs listed here are automatically incorporated. Section B gives more detail about these MCTFs.

Only those MCTFs which have been installed previously and are not listed in Section F of the new link list, must be again manually installed on the new diskette.
Note that for the same fix a new patch is necessary, see also 'Problem Number Assignment'.

Section I lists all the installed module IDs. The numbers in column A and D point to the lines in the respective section where this module is used.

Problem Number Assignment

The problem number is composed in the following way:

P	XXX	X	XXX

- P for Problem
- Last three digits of EC number (C)
- Problem area code (B)
- Unique number (A)

(A) This is a unique number assigned to a problem.

(B) This code points to a distinct area in the system.

A = SUPPORT PROCESSOR (MSSS)
B = DIAGNOSTICS
*C = CHANNELS and ATTACHED I/Os
D = DISKETTE DRIVES (SYSTEM and USER DISKETTE)
*E = DISK EMULATORS (231X 33XX)
F = FTA AND ATTACHED I/Os (3310, 8809, 3340, 3370)
G = DCA AND ATTACHED I/Os (3262, 3278-2A, 3278-2, 3279-C, 3287, 3289-4)
H = ECA, FBM, FFBM
I = PU
J = INSTALLATION
K = RESERVED
*L = LA
*M = 14XX EMULATOR
N = BBA
O = PERFORMANCE
P = POWER AND COOLING
Q = SOFTWARE
R = REMOTE SUPPORT
S = MAINSTORE AND PU CONTROL STORE
T = COMMUNICATIONS ADAPTER
U = MISCELLANEOUS
*V = IOSS (5424)
W = MCTF DISK UPDATE LIST
X TO Z RESERVED
0 TO 9 RESERVED

* Not applicable for system 4321

(C) Last three digits of the microcode EC number (taken from link list). If you suspect an hardware error, enter 000. Note that the problem number changes if the problem exists for more than one microcode EC since these three digits will change.

If you install an MCTF, these three digits must compare with the last three digits of your EC on the link list and diskette.

How to Read and Identify the Link List

```
G   A   B   E   C   F   D

                                   LINK DATE = 78285103630          PAGE    1--A
---------1---------2---------3---------4---------5---------6---------7-R
START  EC=M264279                                                   00000001
       REA=M6420220                                                 00000002
PN = 8484838                                                        00000004
VOLUME    VOL='001FU1',SER='43317305001'                            00000006
  RULES LEVEL              =  364290                                00000008
  MANDATORY REA s          =                                        00000009
  6420218 64220209                                                  00000010
BEGIN OF INPUT FROM COMMON ORDER FILE--------------------------------00000012
START   4321001 0500173 PAXPAX 01FUCNTRL 0008481022 032001000364290 00000013
H MFIBM 0008486654 0008486655 0008486649 0008486500 0008486509 0008486511 00000014
END OF INPUT FROM COMMON ORDER FILE----------------------------------00000015
```

Figure 1: Header page of link list

- (A) EC of link list
- (B) As required REA number
- (C) Machine serial number
- (D) Date and time of link run - Note 1
- (E) FU = Control diskette link list
  DD = Diagnostic diskette link list
- (F) EC number of link program
- (G) Part number of link list
- (H) MFI BMs (Feature BMs) installed (Description on page PA 015, Vol 30)

How to Read the Diskette Label

```
                                        53FD
B  XXXX                        SER XXXXXXX      L
                             LOAD VOL ID  FU1    C
D  LINK DATE 78285103630 ISEQ    XX             F
P  OVFL 1/2 or 2/2                              M
E  PN  - 8481023
A  EC  - XXXXXX
N  REA - XX-XXXXX
H  GID - T103630
J  F.O.- XXXXXX
K  DATE 10/12/78 WID-01 SEQ-     1              G
```

Figure 2: Diskette label

- (A) EC number
- (B) Machine type
- (C) Machine serial number
- (D) Date and time of link run - Note 1
- (E) P/N of diskette
- (F) Load volume continuation sequence number
- (G) Diskette set sequence number
- (H) Generation identifier
- (J) Factory order number
- (K) Diskette writing date
- (L) Diskette drive type
- (M) Installation sequence number
- (N) Latest mandatory REA
- (P) Indicates if an overflow diskette exists and gives number of diskette (1 of 2 or 2 of 2)

Note 1: These numbers must compare between the link list and diskette label.

MCTF Update via MCTF Diskette

Select the specific option or enter selection 5 to get additional information from the HELP FUNCTION offered in the MCTF DISKETTE SERVICES OPTION menu.

With the MCTF diskette and the MCTF DISKETTE LOADER program (on the control diskette CNTRL FU1) the CE is able to install MCTFs directly onto the control and/or diagnostic diskettes.

Proceed as follows:

1. Insert the control diskette FU1 and make IML.
2. Call M/S PROGRAM SELECTION from the control diskette.
3. Select UTILITIES, press ENTER.
4. Select AUTOMATIC MCTF INSTALLATION, press ENTER.

The MCTF loader program frame is displayed showing the message LOAD IN PROCESS. After the load is completed the following screen is displayed and the indicated actions have to be performed.

```
+-----------------------------------------------
| LVL:81055045          LOADER FOR MCTF PROGRAM
|            MCTF LOAD DONE, PROCEED AS FOLLOWS:
|            1. PRESS MODE SELECT KEY
|            2. PERFORM PROGRAM RESET (P)
|            3. PERFORM RESTART (R)
```

After action three the COMMUNICATION ROUTINE program is automatically selected.

```
+-------------------------------------------------------------------
|          ************************************************************
|          *                                                          *
|          *   COMMUNICATION ROUTINE PU <===> MSSS IS READY TO RUN    *
|          *                                                          *
|          ************************************************************
|      ENTER: M  = AUTOMATIC MCTF UPDATE
|             F  = FRIEND AND OTHER APPLICATIONS
|
| SELECTION: M
```

Select option M and press ENTER.
If available the use of the I/O diskette drive is now prompted. Use of this drive reduces diskette swapping. If the I/O diskette drive is not available the MCTF PRIMARY OPTION MENU is displayed.

```
+-----------------------------------------------------------------
|                        *** MCTF SERVICE IS ACTIVE ***
|
| DO YOU WANT TO USE THE I/O DISKETTE DRIVE ? (Y/N)
|
| SELECTION: Y
```

Enter Y if the I/O diskette is available. If Y is entered you are prompted by the screen to:

INSERT MCTF DISKETTE INTO I/O DRIVE
AND PRESS 'ENTER'.

After ENTER or if you have entered 'N' as selection, the following screen picture is displayed:

```
+-----------------------------------------------------------------
|                        *** MCTF SERVICE IS ACTIVE ***
|          M C T F   P R I M A R Y   O P T I O N   M E N U
|
|      1 = INSTALL MCTFS ON FUNCTIONAL DISKETTE 1
|      2 = INSTALL MCTFS ON FUNCTIONAL DISKETTE 2
|      3 = INSTALL MCTFS ON DIAGNOSTIC DISKETTE 1
|      4 = INSTALL MCTFS ON DIAGNOSTIC DISKETTE 2
|
|                X = END OF SESSION
|
| SELECTION:
```

Diskette Identification

Program Handling - Actions

Purpose

This utility program allows you to display all MFI BMs installed and lists you all REAs and MCTFs installed.

Prerequisite

Any control or diagnostic diskette inserted.

How to Select the Utility Program

1. Call M/S Program Selection [A]
2. Key in selection for UTILITIES [B]
3. Select DISKETTE IDENTIFICATION

   This selection display offers you three subselections:

   M = MFI DISPLAY [C]
   D = DISKETTE IDENTIFICATION [D]
   C = DISPLAY CONFIGURATION (see Note)
   L = DISKETTE LINK INFORMATION (see [1] on next page)

4. Enter the appropriate selection, press ENTER.

   Note: This selection allows only to display the hardware configurator (no change is possible). It might only be used on request from your support function in cases where problems are expected due to configuration errors.

   - A full description is available for the support function in the FSC Manual, Vol. 22.
   - For meaning of power configuration bits refer to MI POWER in Vol. 16 subject 'Before Calling for Assistance'.
   - See also 'MES Update Without a New Diskette' in Section 6 of this manual.

Program Handling - Results

Screen displays:

[A] IBM MAINTENANCE AND SERVICE PROGRAM SELECTION

[B] UTILITIES PROGRAM SELECTION

[C]

```
                    * 4331 DISKETTE IDENTIFICATION *
MODEL: 002    SERIAL NO: 70-50150       FUNCTIONAL DISKETTE 1   EC: ......
LINK DATE OF DISKETTE:   79/300/17/35/15
                         MFI BM'S USED FOR THIS LINK   041
+-------------------------------------------------------------------------+
|                                  (A)                                    |
+-------------------------------------------------------------------------+
                  END OF DISPLAY. HIT ENTER TO CONTINUE
```

(A) In this field the actual MFI BM numbers which are used for this link are shown.

[D]

```
                    * 4331 DISKETTE IDENTIFICATION *
MODEL: 002   SERIAL NO.: 70-50150      FUNCTIONAL DISKETTE 1   EC: ......
LINK DATE OF DISKETTE:   79/300/17/35/15
             MICRO CODE REA'S INSTALLED     NONE
             MCTF'S INSTALLED BY LINK       NONE   (B)
             MANUAL INSTALLED MCTF'S        NONE
             MCTF'S INST. BY MCTF DISKETTE  NONE
                  END OF DISPLAY, HIT ENTER TO CONTINUE
```

(B) Any REAs, or MCTFs installed will be listed in the lines after the header.
Instead of the word NONE the actual count of installed REAs, MCTFs is given.

Diskette Directory (DDIR) Display

Program Handling - Actions

The 'Diskette Directory' replaces part of the former hard-copy link list and is written onto the control-, as well as onto the diagnostic diskette.

This directory contains the:
- Module (Load) ID
- Number, name(s) and level of MEMBER(s)
- Number of CSECT(s)
- LINK ORIGIN (Linked Storage Address)

Of all modules making up the microprogram for a particular machine.

The purpose of the diskette directory (when displayed) is to show the microprogram configuration (presence or absence of a module).

The following procedure shows how to display information from the diskette directory.

1. Call M/S PROGRAM SELECTION picture.
2. Select UTILITIES (C).
3. Select DISKETTE IDENTIFICATION (9).
4. Select DISKETTE LINK INFORMATION (L). (The picture DISKETTE DIRECTORY DISPLAY appears on screen) [1] .
5. Enter desired ID or MEMBER name, or DESTINATION, press ENTER. Information about the specified ID or MEMBER or DESTINATION needed (e.g. for installation of MCTFs) is displayed [2] .

   For information on 'How to Install MCTFs' refer to:

   - How to Install an IRECA Update or MCTF Received from Data Bank
   - Manual MCTF Installation
   - MCTF Update via MCTF Diskette

[1]

```
                    DISKETTE DIRECTORY DISPLAY
                                                          (A)
        DISKETTE TYPE: 001FU2
 SELECT ID:  012E   OR MEMBER:  ........  OR DESTINATION:. .   ( SP  / IO /  PU )
                                   WITH/WITHOUT ADDRESS:<-------
   MAN                  370 TIMER: ON                          (B)
                        TOD:SEC                    DATA:       ADDR::
2054
```

[2]

```
                    DISKETTE DIRECTORY DISPLAY
                                                                  (E)
        DISKETTE TYPE: 001FU2   (F)                               |  (G)
 ID= 012E     D= 1<--(D)          NUMBER OF MEMBERS = 0001 <-|
      MEMBER = BBAFHN99-51 <--|   NUMBER OF CSECTS  = 0001 <----|
            |-->ESID = 000B   ADDR UNIT = FWORD <-|   LINK ORIGIN = 007F60
 (C)
            (H)                                   (J)

              DISPLAY COMPLETE, PRESS ENTER TO RESELECT
                        370 TIMER: ON              DATA:       ADDR:
                        TOD:SEC
EF10
```

(A) DESTINATION.....see next page

(B) WITH/WITHOUT ADDRESS:..see next page

(C) ID = 012E.....ID which was keyed in

(D) D = 1 .....Number of Diskette (1 = normal, 2 = overflow)

(E) Number of MEMBERS.....Member count

(F) MEMBER = BBAFHN99-51...Name of member and its level

(G) Number of CSECTS.....CSECT count

(H) ESID = 000B.....Name of CSECT

(J) ADDR UNIT.....Specifies wether a fullword (FWORD) or BYTE is addressed.

Note:
- If the information to be displayed fills more than one screen the message 'MORE..., PRESS ENTER FOR NEXT DISPLAY' appears instead of 'DISPLAY COMPLETE, etc.'.
- If an invalid member name (or ID) name was keyed in the message 'MEMBER NOT FOUND, CHECK YOUR INPUT!' appears together with the wrong member (or ID) name instead of 'DISPLAY COMPLETE, etc.'.

Diskette Directory Display (continued)

When DESTINATION (Ⓐ on previous page) was entered, all IDs are listed with their START- and END Address and their location.
Input (to be keyed-in) for DESTINATION is either:

- PU for Processing Unit [3], or
- SP for Support Processor [4], or
- IO for the processor of the I/O Subsystem.

The location for an ID (Destination PU) is either:

- Control Storage, or
- BSM (Microcode area), or
- Data Storage (Area in BSM, which is usually not used as microcode area).

The location for an ID (Destination SP or IO) is either:

- Data Area, or
- Instruction Area, or
- Mixed Area

} All areas in storage of Subprocessor

If an address is specified in the field WITH/WITHOUT ADDRESS:..... (Ⓑ on previous page), the ID(s) which use the specified address are listed with their START and END address and their location.

[3]

```
                          DISKETTE DIRECTORY DISPLAY
          DISKETTE TYPE: 001FU1
ID= 0100   START ADDR.= 000000   END ADDR.= 001300   DEST.= PU  CONTROL STORE
ID= 0101   START ADDR.= 001300   END ADDR.= 001460   DEST.= PU  CONTROL STORE

ID= 0141   START ADDR.= 00A7F8   END ADDR.= 00AE88   DEST.= PU  B S M
ID= 0142   START ADDR.= 00AE88   END ADDR.= 00B800   DEST.= PU  B S M

ID= EF0A   START ADDR.= 000000   END ADDR.= 002000   DEST.= PU  DATA STORAGE
ID= EF10   START ADDR.= 000000   END ADDR.= 0032B0   DEST.= PU  DATA STORAGE

                DISPLAY COMPLETE, PRESS ENTER TO RESELECT
    MAN                 370 TIMER:ON            DATA: 0000     ADDR: 000000
                        TOD:SEC
6062
```

[4]

```
                          DISKETTE DIRECTORY DISPLAY
          DISKETTE TYPE: 001FU1
ID= 0003   START ADDR.= 005000   END ADDR.= 005AE0   DEST.= SP   MIXED AREA

ID= 0007   START ADDR.= 002000   END ADDR.= 006696   DEST.= SP   MIXED AREA
ID= 0010   START ADDR.= 009800   END ADDR.= 00E85E   DEST.= SP   DATA AREA
ID= 0011   START ADDR.= 00E880   END ADDR.= 00F200   DEST.= SP   DATA AREA
ID= 0012   START ADDR.= 00F200   END ADDR.= 00FC00   DEST.= SP   DATA AREA
ID= 0015   START ADDR.= 008000   END ADDR.= 00FFEA   DEST.= SP   INSTR AREA
ID= 0020   START ADDR.= 006800   END ADDR.= 006E5C   DEST.= SP   MIXED AREA

ID= 0051   START ADDR.= 006800   END ADDR.= 007440   DEST.= SP   MIXED AREA

                MORE...   PRESS ENTER FOR NEXT DISPLAY
    MAN             370 TIMER:ON            DATA: 0000     ADDR: 000000
                    TOD:SEC
6062
```

```
                          DISKETTE DIRECTORY DISPLAY
          DISKETTE TYPE: 001FU1
ID= 0010   START ADDR.= 009800   END ADDR.= 00E85E   DEST.= SP   DATA AREA
ID= 0015   START ADDR.= 008000   END ADDR.= 00FFEA   DEST.= SP   INSTR AREA


                DISPLAY COMPLETE, PRESS ENTER TO RESELECT
    MAN             370 TIMER:ON            DATA: 0000     ADDR: 000000
6062
```

This page has been
intentionally left blank

Tests for DCA and Attached Devices

Overview

There are six online tests available to test devices attached to the display cluster adapter (DCA) and to display error information for these devices and the DCA. The DCA is part of the support subsystem.

Purpose of Tests

Test 0 (Zero)
This test checks the communication path between the DCA and the devices attached to it. In addition a type A device is funtionally tested.

Test 1
This test displays error statistics for the DCA and attached display units, and printers.

Test 2
Not available.

Test 3
This test displays the type and status (off, on, disabled) for all configured devices.

Test 4
This test resets the DCA and device error logs.

Test 5
Not available.

Test 6
This test displays the device control blocks (DCB)with the extention (DCBE) and the DCA control block (DCACB).

Test 7
This test is only available for the 3279 color display unit. It allows to converge the screen. The test can be selected only for one device at the time.

The online tests can be executed concurrent to the customer operation for all devices attached to port 1-15. For the operator console (port 0) the tests are only supported if the system is in MAN OP mode. To execute the tests enter Test Mode.

How to Invoke and Leave Test Mode

Port 1-15:
Hold down the ALT key and press the TEST key.

Port 0:
On line tests on the operator's console can be run only when the console is in manual operation state (MAN OP displayed on line 25). When your system has the color console installed and another display (port 1-15) is using Test 7 (color convergence) the message 'CONVERGENCE ON PORT NN' is displayed on line 23. If this message is displayed, consult the user of Test 7 before forcing manual operation state as this ends the Test 7 running on the other display, storing the convergence data completed so far. Other online tests are unaffected by entering manual operation state. Regardless whether your operator's console is a 3278-2A or 3279-2C, use the following procedure to run any online test:

1. Press CHG DPLY key.
   If MAN OP appears on line 23, go to step 3.

2. If 'MODE-SEL CANCELS CONV!' appears on line 23, either press the CHG DPLY key and continue with other work (in which case the information message 'CONVERGENCE ON PORT NN' re-appears) or force MAN OP as follows:

   a. Press MODE SEL key. The mode selection screen appears and the convergence test on the other display is terminated.

   b. Press CHG DPLY. The previous user screen appears.

   c. Press CHG DPLY again. MAN OP appears on line 25.

3. Hold down ALT key, press the COPY key, and release both keys. TEST appears on line 25.

To return to MAN OP mode on the OP-console repeat step 3 then step 2c. For any other display hold down the ALT key and press the TEST key.

To select a test enter the request message in the following form:

NN/n ENTER

NN = Port number of tested device
n = number of test

Any test request message must be delimited by at least one blank or empty (X'00') position. An empty position is entered by moving the cursor. If NN is omitted the test is executed on the display you entered the request.

Hitting any key which is not required for test operation will return input inhibited minus function indicator (XC - f). The same result is achieved by requesting an invalid test function (for example, Test 6 for a not configured device).

Test 0

Overview

This test performs the following functions:

- Transmits a test pattern to the requesting display and uses this test pattern to test certain functions. For details refer to the I/O maintenance manual.

- Executes a communication path test to the DCA attached printers.

Test 0 Request for a Display Unit
If Test 0 is requested for a display unit a test pattern is transmitted from the support processor to the display unit. This display unit may be the one from which the test was requested or if a port was specified with the request message the unit attached to this port.
The test will be executed except under the following conditions:

- If requested for port 0 (operator console), the test pattern function is not performed. Input inhibited minus function indication is returned.
  For Test 0 on the operator console see 'How to Request Test 0' on next page.

- If the device is busy (executing a command that requires asynchronous ending status), input inhibit minus function indication is returned.

Test 0 Request for a Printer
If the test is requested for a DCA attached printer only the communication path test is executed, to check continuity of the coax cable.

Tests for DCA and Attached Devices (continued)

Display of Test 0 Result

The test result is shown at the requesting display behind the entered test request message. The result will be either a +, -, or a 0, whereby:

+ = Test successful or path OK
- = Test failed, device disabled due to error
0 = Test not executed, device powered off or already in TEST mode.

In addition a test pattern is displayed at the tested display unit. If the tested unit is the one you are entering the request the test result (+,-,0) is not shown. The appearance of the test pattern means test successful. Refer to next heading for test pattern layout.

How to Request Test 0

- Enter TEST mode.
- Insure that the cursor is at location zero (0), then enter the request message in the following form:

  1) Enter the port numbers of the device you wish to test. Enter any one ot two digit numbers from 1 to 15 (see Note).
  2) A slash (/).
  3) A zero (0).

  Note: The entry of a slash only following by ENTER defaults to test zero on the requesting display. Selection of test zero for an other port is possible except for port 0. For the operator console test zero must be requested in the form slash (/) ENTER.

- If you are testing a display unit, the following pattern will appear on the screen, if the test is successful:

```
TEST:     1;NN
?SEL PEN      SEL PEN
    &SEL PEN     >SEL PEN
    DISPLAY  INSERT CK
```

NN = The port number of the terminal that requested the test.

- Use the appropriate Display Station Maintenance Information Manual to run the functional tests with the above test pattern.
- Exit Test Mode.

Test 1

Test 1 displays device and adapter error information. Formats for entering a Test 1 request are as follows:

- 0 to 15/1 Displays error information of any device from port 0 to 15.
- A1/1 Displays the DCA error information.

The error information is resident in the support processor storage. It is lost with either power off or IML. If any of the statistical counters displayed in the error information exceeds the value X'FF' a reference code is displayed and a log is saved on the system diskette. The general format of all logs reflects two things:

1) The most recent error event.
2) Statistical counters reflecting the type of errors occurring. The statistical counters record errors using hexadecimal values. The maximum value for any counter display is hex 'FF'.

The following is a summary of all error events generating a 200-seriens error number (2NN). Note that only the low order two digits of the error number are displayed.

200 Series Error Numbers

Device Type	Error Number	Meaning
3278 and 3279	203	Feature error
	204	Device check
	207	Lost operation complete
	208	Invalid operation complete
	209	Command Q failure
	211	Invalid status received
	229	FSU storage parity error if 3279 or configuration error if 3278.
3279 only	228	Storage parity error
3287	203	Feature error
	204	Device check
	207	Lost operation complete
	208	Invalid operation complete
	209	Command Q failure
	211	Invalid status received
	231	Printer equipment check
DCA	292	Invalid entry in the error queue
	293	Unconfigured device attached
	294	End cycle steal error
	296	Status lost due to over 63 counter
	298	Command Q cycle steal machine check

Device Error Information Display

The device error information should be accessed whenever a specific device is suspected to be experiencing intermittent or difficult to define errors. These errors may or may not be generating 2NN numbers for the failing device. Since there are two (2) formats of device error information available when using Test 1, it is necessary to determine what type of device (3278, 3279 display or 3262, 3287 or 3289 printer) is attached to the port (0-15) for which you are requesting Test 1.

Device Error Information Display (continued)

Line 1
This line is returned exactly as you entered your request.
Example: You entered 01/1 and the first line of the display sent back to you should be 01/1.

Line 2
This line displays the current low order digits of 200 series error numbers. If there are no errors generating 2NN numbers, the second line of this display will appear as follows:

0000 0000

If error information had been recorded, the second line of this display could appear as follows:

0400 0000

04 = The most recent 200 series error, in this example 204, which is a device check.

The 200 numbers appear in the leftmost position. The rest is always '0'.

Line 3
This line displays the statistical counter information associated with this device. If there are no errors recorded for this device, the counters will display as follows:

0000 0000 0000

Counter 01 **Counter 06**

The counters are not numbered when they are displayed. They are, however, assigned counter position numbers. The leftmost two digit position is counter number 01 and the rightmost counter position is counter number 06. The value in each counter is given in hexadecimal. If errors were being recorded for this device, the display for line 3 could appear as follows:

02FF 1A00 0013

Counter Number 01 = X'02' = 02 Errors Total
Counter Number 02 = X'FF' = 255 Errors (Maximum)
Counter Number 03 = X'1A' = 26 Errors Total
Counter Number 04 = X'00' = No Errors
Counter Number 05 = X'00' = No Errors
Counter Number 06 = X'13' = 19 Errors Total

The counter numbers are assigned specific meaning according to the device for which the error information is requested. The counter meanings for the different device types are listed in the following table.

Meaning of Error Information Counters

Printer Log for 3262, 3287 or 3289		Display Log for 3278, 3279
Cntr.	Meaning	Meaning
01	Coax Timeouts	Coax Timeouts
02	Coax Parity Errors	Coax Pairty Errors
03	32nd Poll Timeout	32nd Poll Timeout
04	Device Checks	Device Checks
05	Error Status	Error Status
06	Equipment Check	Not used

DCA Error Information Display

The DCA error information is accessed by using A1/1 test request message. The information returned consists of the last 2NN number recorded, the basic adapter status information at the time of the failure, and statistical counters similar to the device error counters. The error statistical information can be used to determine:

1. What is the frequency of errors
2. What was the adapter doing at the time of error
3. How did the operation end, etc.

How to Interprete the Test Display

Line 1
Returned the same as input, A1/1.

Line 2
Four (4) bytes are displayed on this line; however, only three are currently used. The individual bytes are not labeled when displayed. Each byte is assigned a specific meaning. See the example below for byte identification:

0000 0000
NNXX SSSS

The leftmost byte is labeled NN. This code represents the two low-order digits of any 200 series error number.

The next byte to the right of NN is XX, which is always 00 and not used.
The next two bytes to the right of XX are labeled SSSS and represent the adapter status associated with the last failure. See the following table:

DESCRIPTION	BIT	MEANING IF BIT IS TURNED ON
Left SS Byte	0	Counter Overflow
	1	Read Time Out
	2	Turnaround or Read Line Parity Error
	3	Read Data Byte Parity Error
	4	Stop Poll
	5	Timer
	6	Error Q Entry
	7	Not Used
Right SS Byte	0	Extended Status Set
	1	Command Completed
	2	Adapter Active
	3	Keystroke or Status Q Entry
	4	Not Used
	5	Machine Check
	6	Enable / Disable
	7	Interrupt

Tests for DCA and Attached Devices (continued)

How to Interprete the Test Display (continued)

Line 3

This line displays the statistical counter information associated with this adapter. If there are no errors recorded for this adapter, the counters will display as follows:

```
0000 0000 0000 0000
|                  |
Counter 01         Counter 08
```

The counters are not numbered when they are displayed. They are, however, assigned counter position numbers. The leftmost two-digit position is counter number 01 and the rightmost counter position is counter number 08. The value in each counter is given in hexadecimal. The maximum value for any counter display is X'FF'.

Each counter is assigned a specific meaning. See the folowing table:

COUNTER	MEANING
01	Status Q Entry Placed in Error Q
02	Interrupt from an Unconfigured Device
03	Cycle Steal Ended in Error
04	Invalid Adapter Status
05	Lost Status Due to Over 63
06	Not Used
07	Cycle Steal Machine Check
08	Not Used

Test 2

Not available.

Test 3

This test displays the status of all configured terminals. Test 3 can be invoked after using the ALT and TEST keys to enter TEST MODE. An entry of /3 from any functioning display, and then an ENTER, will display the following format on the screen:

```
Line 1   /3
Line 2   0123456789012345
Line 3   1101101--1000101
Line 4   DDSCDSPDDD DDP P
```

Line 1

The entered test request message is returned. In this example /3 is returned.

Line 2

Displays the digits corresponding to the low order digit of the coax port address, namely port 0 = position number 0 and port 15 = position number 15 (the second 5 from the left).

Line 3

Displays the status,

1 = on
0 = off or not configured
- = disabled,

of each attached device.

Line 4

Shows the device type attached to each port.

D = Display
P = Terminal Printer
C = 1052 Copy Printer
S = System Printer

Test 4

This test allows to reset the DCA and device error information areas. The display must be in test mode before the test request message can be entered. Enter the request message in the following format:

0 to 15/4	Resets the log for the device attached to the specified port to all zeros (0).
A1/4	Resets the DCA log to all zeros (0).

Test 4 may be used to clear the error information area without performing IML. This allows to track intermittent failures.

Test 5

Not available.

Test 6

Overview

This test allows to display the control block for DCA attached devices (DCB) and for the DCA itself (DCACB).

The device control block (DCB) contains common subsystem information and information pertaining to a specific device. The Test 6 display represents the most current information regarding a device.

The DCB has two parts: The common part (from byte 0 to X'18') and the device specific part (starting at byte X'19' to byte X'3F').

The common part has the same layout for all devices on the DCA. The layout of the device specific part varies for the different device types. The common part is used for communication between the BBA level program and the work level program. The device specific part is used for communication between work level program and Display Cluster Adapter (DCA) program and for work level or DCA program internal usage.

The DCB has an extension, the device control block extension (DCBE). The DCBE is used and maintained only by the DCA.

Test 6 (continued)

To invoke test 6 you must first enter TEST MODE by using the ALT and TEST key . The DCB for any configured device may be displayed by keying the port number (in decimal) followed by a slash (/), the number 6, an empty (X'00') or blank character, and then hitting the ENTER key. Each DCB consists of one display of 128 bytes each. The individual bytes are not labeled. There are 11 lines to each display. The first line is always returned the same as input (0-15/6) for each device. The second line of the display will show the start address of the DCB. Then there will be four lines reflecting the two parts of the DCB.

The 7th line shows the DCB-extension address followed by the DCBE in line 8 through 11.

Byte Number Chart for DCB Display

```
          NN/6   - Returned as input
          XXXX   - DCB address
Byte #*   0 1  2 3  4 5  6 7  8 9  A B  C D  E F
     0    0000 0000 0000 0000 0000 0000 0000 0000
     1    0000 0000 0000 0000 0000 0000 0000 0000
     2    0000 0000 0000 0000 0000 0000 0000 0000
     3    0000 0000 0000 0000 0000 0000 0000 0000
          YYYY   - DCBE address
     0    0000 0000 0000 0000 0000 0000 0000 0000
     1    0000 0000 0000 0000 0000 0000 0000 0000
     2    0000 0000 0000 0000 0000 0000 0000 0000
     3    0000 0000 0000 0000 0000 0000 0000 0000
```

NN = port number 0 to 15
*Byte numbers are not displayed.

Asking for a not configured device, or a not supported TEST number, will result in a locked keyboard and XC-f displayed on the status line.

DCB Display - Common Part Byte 0 to X'18'

Byte	Meaning
00	Byte zero contains a combination of the DCA address (bit 5 - 7) and the port number (bit 0 - 4). X'02' port 0 X'0A' port 1 X'12' port 2 and so on X'7A' port 15
01	Reserved
02	Byte 02 holds the modified logical device address. The value derived by the modification depends on the configuration of the machine. In addition to the address, there is information for several occasions stored in byte 02. The layout of byte 02 for status presentation is: +-----+ | 0 | 1 | 2 | 3 | 4 | 5 | 6 | 7 | ...Device address.. .....Reserved .....0 = No incorrect length handling 1 = Incorrect length handling .....0 = No count correction necessary 1 = Count correction necessary

Byte	Meaning
02 cont'd	The layout of the byte for data transfer request is: +-----+ | 0 | 1 | 2 | 3 | 4 | 5 | 6 | 7 | ...Device address.. .....Reserved .....0 = No count correction 1 = Count correction .....0 = Normal data transfer 1 = Data transfer for data chained CCW The byte layout for successful data transfer is: +-----+ | 0 | 1 | 2 | 3 | 4 | 5 | 6 | 7 | ...Device address.. .....Reserved .....Not used .....0 = No more data transfer 1 = Another data transfer will follow.
03	Contains the /370 CCW command after initial selection and reselection. If zero, a pseudo command is stored in byte 04.

Tests for DCA and Attached Devices (continued)

DCB Display - Common Part Byte 0 to X'18' (continued)

Byte	Meaning
04	If the byte 03 is set to X'00', byte 04 indicates the function which has to be performed. Information if bit is set to 1: Bit 0: Selective reset 1: Halt I/O - Halt device 2: Stop chaining 3: End of data chaining 4: End data and command chaining 5-7: Reserved
05	Reserved
06	Holds the /370 unit STATUS (Basic Status Byte). It is reset to X'00' by the BBA program after status presentation.
07	Reserved
08,09	Flags concerning the device - BBA interface are stored in this halfword. Information if bit is set to 1: Byte 08: Bit 0: Device not ready 1: Command chaining in process 2: Initial selection 3: Device busy with a command 4: =0: Data transfer from SP to PU =1: Data transfer from PU to SP 5: Last data transfer for this device 6: =0: Data transfer ended normal =1: Data transfer ended abnormal 7: Data chaining is going on

Byte	Meaning
0A,0B	This halfword reflects the device type. Information if bit is set to 1: Byte 0A: Bit 0: 3277 emulator 1: 1052 emulator 2: Reserved 3: 3284 emulator 4: Slave printer 5: Operator console 6-7: Reserved Byte 0B: Bit 0: Reserved 1: Color 2-4: Reserved 5: Katakana keyboard 6,7: Keyboard type 00: Typewriter 01: Data entry 1 10: Data entry 2
0C,0D	This halfword indicates the number of bytes which have been transferred through the BBA. In case of count correction it contains the number of not processed bytes.
0E,0F	This halfword indicates the number of bytes which shall be transferred through the BBA.
10,11	This is the start address of a data buffer from/to where the BBA should cycle steal the data.
12,13	The sequence number of this device control block (bit significant) is stored here.

Byte	Meaning
14	Byte 14 holds the dispatcher mask (or worklevel ID). It is used to select the work level program which handles the request for that device.
15	Reserved
16,17	This halfword contains the address of a command decoding routine which is associated with the device.
18	Sense Byte 0 contains the first byte (Byte 0) of the printer sense Bytes retrieved with a /370 sense operation.

DCB Display - Device Specific Part Byte X'19' to X'3F'

Devices 3278/3279 and 3287

Byte	Meaning
19	Holds the last /370 CCW command executed for that device. It might differ from the one stored in byte 03.
1A,1B	Address of the command queue used in processing of /370 CCW commands associated with the user program for this device.
1C,1D	Operator Console: Address of the command queue used in handling RAS requests. Other Devices: Base address for local copy requests.
1E	Last encountered Attention ID
1F	Write Control Character (WCC) of the last WRITE command.

Device 3278/3279 and 3287 (continued)

Byte	Meaning
20,21	Current cursor address in hex
22,23	Control flags for the DCA interface. Meaning if bit is set to 1: Byte 22: Bit 0: RAS or TEST mode 1: Data transfer pending 2: Inhibit keyboard entries 3: Keyboard locked due to system key 4: Attribute information invalid 5: Cursor on attribute 6: Upshift lock 7: Auto shift Note: Bit 2 is always on in case of test 6 to same device. Byte 23: Bit 0: Device busy 1: Keystroke being processed 2: Numeric lock active 3: Insert mode 4: Status available 5: Read terminal status pending 6: Status queue response expected 7: CMD queue initiated
24,25	DCA error status
26	Error queue entry
27	Keystroke queue entry
28	Interface condition indicator

Byte	Meaning
29	Reserved
2A	3287 status
2B	Status queue entry
2C	Status area for display unit
2D	Most recent error event of the device
2E	Control register in case of display unit
2F	Reserved
30,31	Screen boundary in hex notation
32,33	Address of DCB extension
34,35	Current buffer address
36,37	Translate table address
38,39	Command start address
3A,3B	Flags for device specific operation. Information if bit is set to 1: Byte 3A: bit 0: Device waiting for BBA interrupt 1: Device waiting for DCA interrupt 2: Last /370 CCW command was an immediate one 3: Channel End presented, Device End pending 4: Buffer swap pending 5: MODE SELECT pending 6: Data for chained CCW expected 7: Command decode active

Byte	Meaning
3B	Byte 3B: Bit 0: 1052 emulator - CMD X'01' 1: 1052 emulator - READ outstanding 2-4: Reserved 5: Copy in MAN OP mode ended 6: Reset initiated by BBA 7: Waiting for device reset
3C,3D	Remote support flags
3E-3F	Reserved

Device 3289 and 3262

Byte	Meaning
19	Sense Byte 1 contains Byte 18 (Status code) of the printer sense bytes. See 'Printer Sense Bytes' at the end of this table.
1A,1B	The address of the command queue used in processing of /370 commands for this device associated with the user program.
1C-21	Reserved
22-2B	Same as for 3278
2C	3289-E device status
2D	Most recent device error event
2E,2F	Address of entry point for BBA requests
30,31	Address of entry point for DCA requests
32,33	Address of DCB extension
34-3B	Save area
3C	Status byte of 'A'-device
3D	Timer count for 1 CCW
3E,3F	Address of SENSE byte area

Tests for DCA and Attached Devices (continued)

DCB Extension

Byte	Meaning
00,01	DCA command queue start address
02,03	DCA READ DEVICE STATUS command queue address.
04,05	Interface condition queue start address
06,07	Indicator control table start address
08,09	Basic keystroke table start address
0A,0B	Address of currently used keystroke table
0C,0D	Address of previously used keystroke table (if not test mode)
0E,0F	Canadian-french keyboard table segment pointer
10	Device flags. Information if bit is set to 1: Bit 0: Device disabled due to power off 1: Power on active 2: Worklevel initiated power on sequence 3: Clear key stack in progress 4: Cleared stack indicator transmitted 5: TEST mode initiated from other port 6: Security key on 7: Device disabled due to error
11	Reserved
12-15	Addresses save area for transient SP routines
16	Keystroke stack flags. Information if bit is set to 1: Bit 0: Stack active 1-7: Reserved

Byte	Meaning
17	Keystroke stack count
18,19	Pointer to keystroke stack input position
1A,1B	Pointer to keystroke stack output position
1C,1D	Stored status entry for READ DEVICE STATUS command
1E	Interface condition queue flags. Information if bit is set to 1: Bit 0: Interface condition queue active 1: Interface condition queue empty 2-7: Reserved.
1F	Interface condition queue byte count
20,21	Interface condition queue input pointer
22,23	Interface condition queue output pointer
24	Current attribute character
25	Next attribute character
26,27	Position of current attribute character
28,29	Position of next attribute character

Printer Sense Byte

With a /370 sense operation the printer sense bytes are transferred to the system printer adapter. The sense bytes are stored in a temporary sense area. This area is available to the operating system for evaluation. Sense byte 0 is also stored in the DCB byte 18 and the printer status code (Sense byte 18) in DCB byte 19.
In a few cases the system internally generates status codes for attempted print operations. These status codes (see following table) are also set in DCB byte 19 and are moved into byte 18 of the temporaty sense area.
Byte 3E, 3F of the DCB point to this temporary sense area.

The following printer status codes are generated by the system and are displayed as hex code indication on the customer screen.

Byte	Meaning
F0	Command Queue Error: The sequence number of commands sent to the device cluster adapter (DCA) did not comply with the prescribed rules.
F1	Timeout Error: Each time a command is sent out to the device (printer), a timeout is started. The timeout is reset upon a response from the printer. F1 is set when the timeout has elapsed prior to receiving a response.
F2	DCA-Error: The device cluster adapter has a hardware/controlled polling operation going. This polling operation is also supervised by a timeout. F2 is set when no response to the poll is received within the allotted time.

DCB Extension (continued)

Byte	Meaning
2A	Information about ownership of currently executing command queue. Owner if bit is set to 1: Bit 0: Manual operation request 1: DCA level request 2: DCA level - READ STATUS request only 3: 3289-E level 4: 3278, 3279 or 3287 level request 5: RAS preparation level request 6: RAS level request 7: Reserved
2B	Information about ownership of next command queue. The same flags are set as in byte 2A.
2C,2D	Address of indicator row
2E-39	Save area
3A,3B	If Canadian French: Information about dead keys If Katakana: Shift mode to be restored
3C	Command queue retry count
3D	Reserved
3E,3F	Color control block address

DCA Control Block Display - Byte 0 to X'3F'

The DCA Control Block (DCACB) is displayed in TEST mode by entering the sequence A1/6 ENTER in line 1 of the display. There will be six lines displayed. The first line is as the input (A1/6). The second line shows the DCACB start address. Lines 3 to 6 reflect the DCACB, following the pattern outlined under Test 6, Byte Number Chart.

Byte	Meaning
00	Support processor bus address of the DCA
01	Reserved
02,03	Status of the DCA
04,05	DCA control flags. Information if bit set to 1: Byte 04: Bit 0: Command queue active on DCA 1-3: Reserved 4: Interface condition queue to dispatch 5: Keystroke entries into stack 6: Dispatch 'clear keystroke stack' indicator 7: READ STATUS command queue to start Byte 05: Bit 0: Overflow of over 63 queue counter 1-7: Reserved
06,07	Address of a routine which scans for service requests
08	Counter for DCA timer interrupts
09	DCA request byte
0A,0B	Address of error queue 1
0C,0D	Address of status queue 1
0E,0F	Address of keystroke queue 1
10,11	Cycle steal control information
12,13	Address of error queue 2
14,15	Address of status queue 2

Byte	Meaning
16,17	Address of keystroke queue 2
18,19	Address of inactive error queue start
1A,1B	Address of inactive error queue end
1C,1D	Address of inactive status queue start
1E,1F	Address of inactive status queue end
20,21	Address of inactive key queue start
22,23	Address of inactive key queue end
24,25	Address of the DCB for the device, for which a command queue is initiated.
26,27	Address of the initiated command queue
28,29	Address of the initiated data queue
2A,2B	Save area
2C,2D	Address of DCB address table in port sequence
2E,2F	Address of indicator row control table
30,31	Address of first NDS device control block
32	Most recent DCA error
33	Reserved
34,35	DCA basic status at error event
36,37	Address of timer request halfword
38,39	Transient request halfword
3A,3B	Test 7 requestor base address
3C,3D	Power up convergence requests
3E,3F	Reserved

Test for DCA and Attached Devices (continued)

Test 7

This test allows to optimize (converge)the sreen the settings of the primary colors red, green, blue to produce a pure compound color on the 3279 screen. For example, white contains all three primary colors. If the convergence is not correct, you can see traces of each color at the edges of a white character.
For the correct convergence adjustment procedure refer to the

- 3279-2C MIM SY33-0090 or if available
- 3279 Color Display Station Problem Determination Guide GA33-1525

Only one display at the time can execute the convergence test. If another display unit is already using this test when you are selecting it, Xc-F displayed. The same indication is given if the operator screen is in MAN OP mode or the color reset is not yet completed for the concerned device.

A successful attempt for TEST 7 on any but the operator screen gives the message 'COLOR CONVERGENCE ON PORT NN' on the operator screen.

If the 3279 is configured as 3278 the screen displays only in green.

SP Trace

SP Trace Handling - Actions

Prerequisites:

- Power on or
  Power incomplete light

How to Select the Trace

- Set the CE mode switch on the CE panel to ON.
- Press the three function keys A, B, and C on the CE panel at the same time [A].

How to Terminate the Trace

- Key in function 'Z', press ENTER.
- Set CE mode switch to OFF.

Lamp Test for SP Display Indicators

CAUTION: Do not use this procedure when any system activity is in progress (for example, customer job or diagnostic test is running) or when the machine is in an error hang (for example, dead system).

1. Perform IML with the control or diagnostic diskette (if not already done).
2. Set the display switch on the CE panel to 'ON
3. Select the SP Trace (A, B, C key on the CE panel).
4. Key in function C and data FFFF. Press ENTER. (Display on screen: >C< FFFF*RUN*)
5. Press function key B on the CE panel. All LEDs should light.
6. Select the SP Trace again.
7. Key in function C and data 0000. Press ENTER. (Display on screen: >C< 0000 *RUN*)
8. Press function key B on the CE panel. All LEDs should be dark.
9. Select the SP Trace again.
10. Key in function Z. Press ENTER.

SP Trace Handling - Results

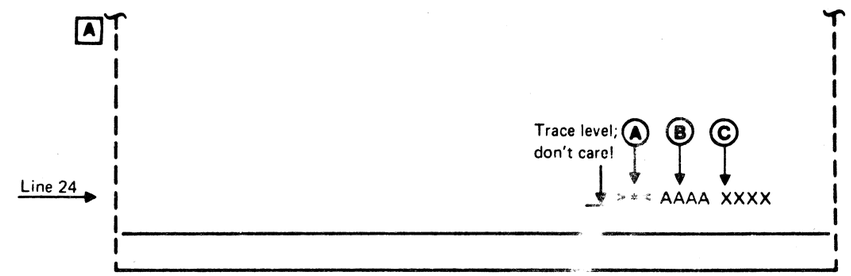

(A) Function to be selected

	FUNCTION	EXPLANATION
D,	Press ENTER	Display Storage
E,	Every time when ENTER is pressed the next even storage position is displayed.	Display storage (address +2)
Z,	Press ENTER	Switch off the TRACE

(B) **Key in the address of the storage position you are told to display by the MAPs. If an odd address is keyed in, it will change to the even address just before the odd one when pressing ENTER.**

(C) This is the displayed data received from the addressed storage position.
CAUTION: If you insert an odd address the second byte of the displayed data is the one belonging to the odd address.

For example: >D<2021 XXXX
after ENTER
>D<2020 8AC1

Support Processor Display

Introduction

Machine errors normally cause a reference code to be displayed on the screen. During the IML-phase it is not always possible to display a reference code. In these cases the error status can be retrieved on the CE panel via the SP display indicators.

These indicators display one byte at the time while the complete error status has ten bytes. See 'SP display handling procedure'.

Before starting to display the error status, ensure that the displayed information is valid. Check this by the following:

- The SP must hang in an error loop. This is the case when
- The keyboard of the operator console is locked (for example, dead system situation) or
- The test pattern 'OPERATOR CONSOLE TEST OF DISPLAY' is not displayed on the screen within 30 seconds after Power On or IML.
- The indicators must not flicker. Wait another 30 seconds to check for a stable display.

Do not operate the SP switches as long as you have no error loop hang condition.

SP switch D causes IML, see also page 1225 in Section 1.

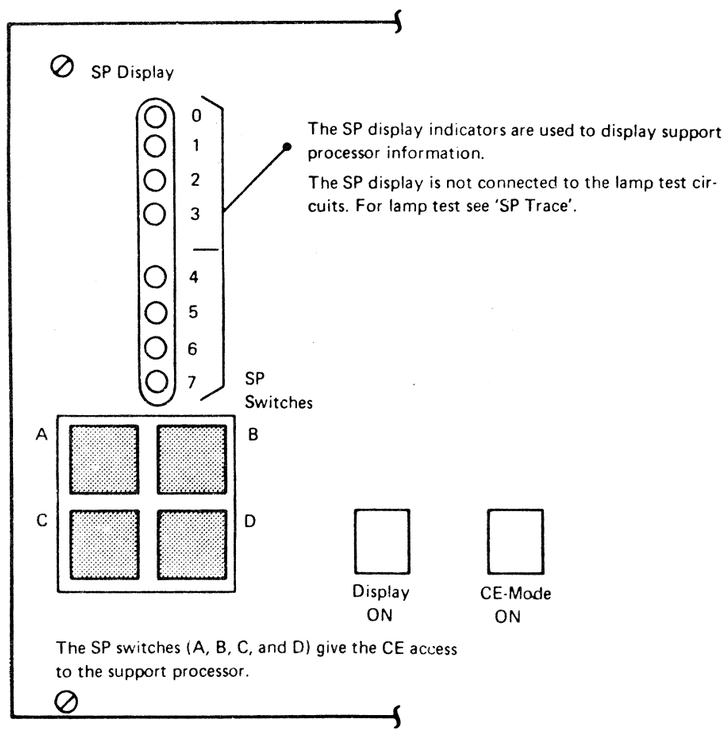

Handling Procedure ~~for SP-~~ Display

- The SP switches A to C must be operated in the sequence given in the pictures below. Information may be lost if the switches are operated in a random sequence.
- Switches must be held down while reading the information.
- Refer to the 'SP Display Introduction' to ensure that the displayed information is valid.
- Use the 'SP Display' sheet or take a copy of this sheet, and write down the 10 different displays.
- Start with display 1 to 5. Press only the switches highlighted in the pictures.
- Press switches A and C together to reset the display registers 1 to 5.
- Continue with displays 6 to 10.
- Convert displays 3, 4, 8, and 9 to hex value.

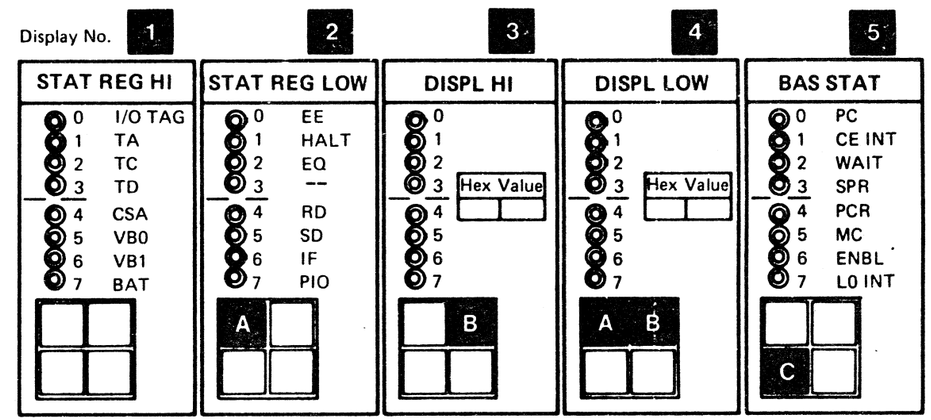

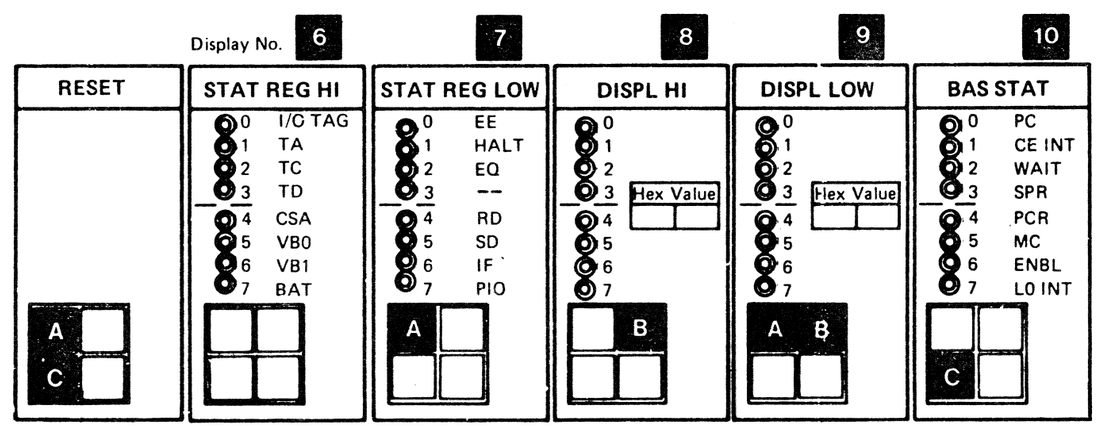

Messages that Appear on Screen

Message	LOG	TEST	TOOL	Reset Condition
REFERENCE CODE	By log-in program	By analysis part of test program		By system reset or IML or next log
STARTED		Appears when the ENTER key is pressed first time to start a test.		
RUNNING		Appears when a test is running.		
STOPPED		Appears when the ENTER key is pressed a second time to stop the test. Stop occurs only at routine end.		
ANSWER	Appears on the screen when an CE intervention is required.	Intervention required at device under test.		
INVALID	Wrong handling Caused by an invalid selection	Wrong handling Caused by an invalid selection of an adapter or a test routine	Wrong handling Caused by an invalid selection	Repeat the handling
LOOPING		Displayed as long as a test loops.		
ERROR		Any machine malfunction or intervention required at device under test but due to an error.	Machine malfunction (If manual operation selected, disable it.)	
LOADING	Appears when the control program is loaded into the processors during IML.			
CHECKSTOP	If an irrecoverable error condition is detected or if 'Stop before Log' becomes active. 1. PSW was disabled 2. Hard stop mode or' stop before log' is active. 3. More than one log with the same unit type was requested in one log process. EXECPTION: MPX/ BMPX allow a higher number of logs in the same log process to support Operating System Recovery. 4. The PU has stopped after a log was taken. 5. The error was not recoverable.			By System Reset or IML

Messages that Appear on Screen (continued)

Message	LOG	TEST	TOOL	Reset Condition
LOG Pending	When the 'IBM MAINTENANCE AND SERVICE PROGRAM SELECTION' is selected. Action required: Press CANCEL.	When the 'IBM MAINTENANCE AND SERVICE PROGRAM SELECTION' is selected. Action required: Insert Control diskette, press CANCEL.	When the Customer Manual Operations are selected. Action required: Press CANCEL.	By log-in program, or system reset or IML.
Log in Process	Appears when a pending log is stored onto diskette by the log-in program.			
REFCODE LOG AREA FULL 2)				By System Reset or IML
HARD STOP MODE	By check control set to hardstop			
TEST		TEST displayed on line 21 is an indication for inline mode active.		
IML ERROR	Error coming up during IML			
STOP Before Log	The 'Stop before Log' Mode stops the system immediately after it has detected an error in a selected unit. The system is set to check stop state, too.			By log mode program, or System Reset,
LOOP	By log loop condition			By System reset or IML
WAIT Q WAIT 1)				

1) This messages comes up during IML if the 53FD is operated by a 43FD adapter.
It means diskette drive not ready, wait approx. 20 seconds.

2) This message replaces 'LOG IN PROCESS' if the available entries in the reference code log area are ten or less than ten.

Supplement to MAPS, Section 5: Diskette Drive Maintenance Information

Table of CONTENTS

INTRODUCTION

000 General Description

IBM diskette drives are direct access, read/write, data storage devices. These drives use the flexible magnetic diskette for data entry, data exchange, and data storage.

The matrix below shows how diskettes are compatible between IBM diskette drives:

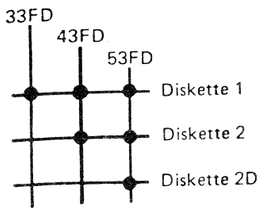

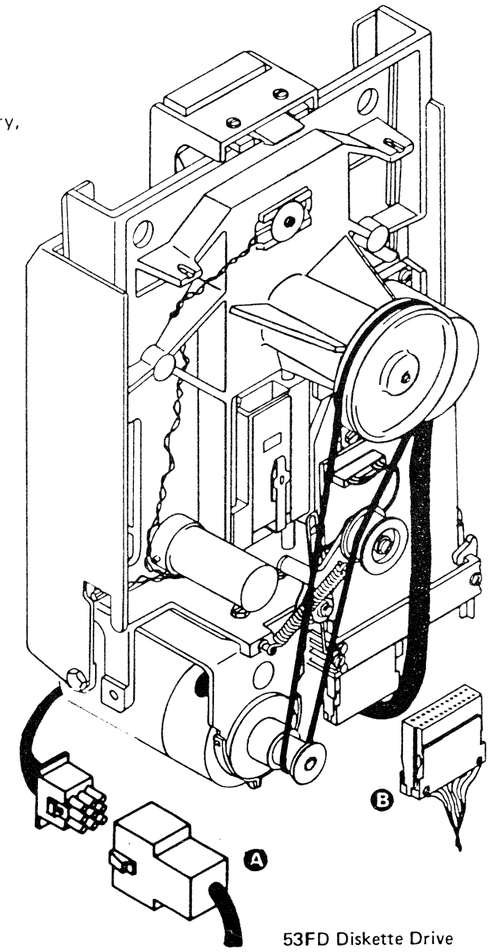

53FD Diskette Drive

- Connecting cables: One signal and DC power B one AC power A
- Diskette speed: 360 rpm

010 Diskette Description

The IBM diskette is a thin, flexible disk that is in a protective envelope. The disk surface is coated with a magnetic recording material. Data is available from both sides of a diskette 2 or 2D and one side of a diskette 1.

The two types of diskettes are identified by the physical location of the index hole A. When a diskette 1 is inserted in a 53FD diskette drive, index sensing circuits prevent the use of the blank side.

For more information about the IBM diskette, see *The IBM Diskette General Information Manual*, GA21-9182.

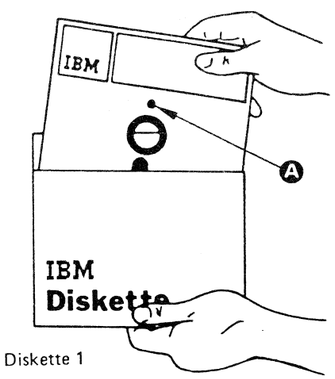

Diskette 1

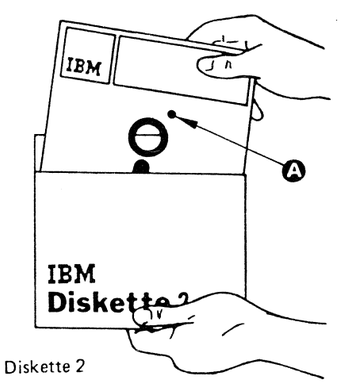

Diskette 2

020 Maintenance

The 53FD diskette drive needs no scheduled maintenance. The MAPs guide the CE in diagnosing diskette drive failures; the MAPs refer to maintenance procedures in this manual when an adjustment, service check, or FRU replacement is needed.

The CE can verify a problem online (using the system) or offline (isolated from the system). The CE should verify a repair online using the system or device diagnostic programs.

The head/carriage assembly, head timing block, and drive hub and pulley assembly are adjusted and tested at the factory. The head timing block and the drive hub and pulley assembly are not field replaceable. If the head timing block or the drive hub and pulley assembly is demaged, the entire diskette drive should be replaced. The head/carriage assembly is replaceable in the field. However, do not repair or clean any part of this assembly.

030 Special Tools

The CE can use two timing pins (part 5562019, located inside the cover assembly) to align:

- The stepper motor shaft and pulley
- The LED assembly

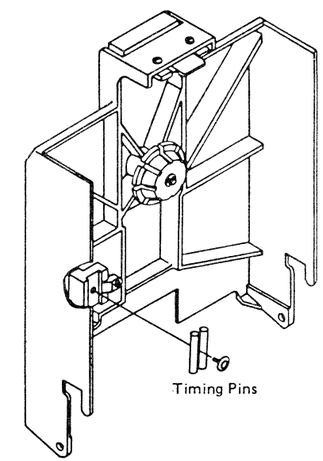

 ND

MACHINE CHARACTERISTICS

080 Electrical Characteristics

The host system, or device, supplies all power to operate the diskette drive, which includes:

- DC voltage for the diskette drive control card:

Logic Voltage (DC)	Maximum Operating Current
- 5 V	0.10A
+ 5 V	0.80A
+24 V	0.59A

- One of the following AC voltages

60 Hz, single phase AC power:

Input Voltage (AC)	Average Operating Current
200V	0.55V
208V	0.55V
230V	0.55V

50 Hz, single phase AC power:

Input Voltage (AC)	Average Operating Current
200V	0.55V
220V	0.55V
235V	0.55V

Note: All voltage tolerances are 10% except the + 24 Vdc which has a tolerance of 12%.

080 Functional Characteristics

Diskette data formatting gives the diskette drive the following characteristics:

- Data capacity (in formatted data bytes):

	Diskette 1	Diskette 2	Diskette 2D
128 Bytes per Sector	242,944*	492,544**	
256 Bytes per Sector	284,160	568,320	985,088***
512 Bytes per Sector	303,104	606,208	1,136,640
1024 Bytes per Sector			1,212,416

* Basic data exchange for a diskette 1
** Basic data exchange for a diskette 2
*** Basic data exchange for a diskette 2D

- Data rate: 250,000 bits (31,250 bytes) per second (FM): 500,000 bits (62,500 bytes) per second (MFM)

- Cylinder to cylinder seek time: 5 ms plus 35 ms for the head/carriage assembly to stop. (The total seek time is the number of cylinders the heads moved across multiplied by 5 ms plus 35 ms).

- Tracks per diskette side: 77 (Cylinder 00 is the label cylinder; cylinders 01 through 74 are for data; cylinders75 and 76 are reserved as alternative cylinders).

  Note: On some systems cylinder 74 is reserved for alternative sector relocation.

- Sectors per track:

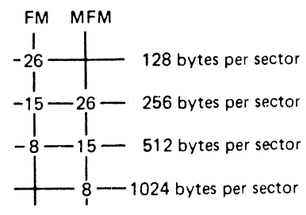

For functional characteristic details on the diskette refer to 'The IBM Diskette General Information Manual', GA21 -9182

SAFETY

100 Personal Safety

The system or device supplies AC and DC power. Voltages are present on the connector terminals in the diskette drive when the drive motor is turning.

Motor and solenoid cases become hot after continuous use; allow enough time for parts to cool before servicing.

Danger notices throughout this manual are personal safety precautions.

110 Machine Safety

Diskette drives can be damaged if operated or serviced improperly. Caution notices in this manual are machine safety precautions.

Do not use IBM cleaning fluid or other cleaning fluids near plastic parts.

Never use damaged diskettes in a diskette drive. Diskettes that are physically damaged (creased or bent) or contaminated (by pencil marks, finger marks, or cleaning fluid) can cause data errors, equipment errrors, or head damage.

120 Diskette Safety

Return a diskette to its envelope whenever it is removed from the diskette drive.

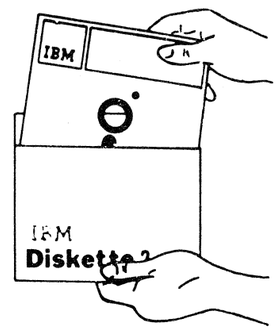

Do not lay diskettes near food, drink, or ashtrays.

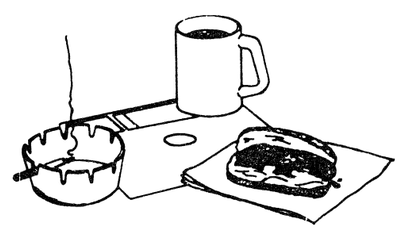

Do not use clips or rubber bands on a diskette.

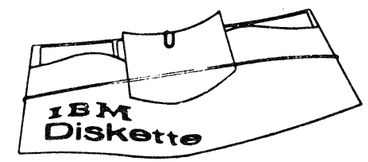

Do not place heavy objects on diskettes.

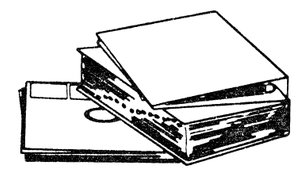

Do not touch or clean diskette surfaces. Contaminated diskettes must be discarded.

Do not place diskettes near materials that might be magnetized. Data can be lost from a diskette exposed to a magnetic field.

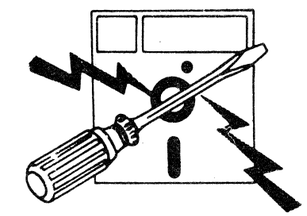

Do not expose diskettes to heat greater than 51.5° C (125° F) or direct sunlight.

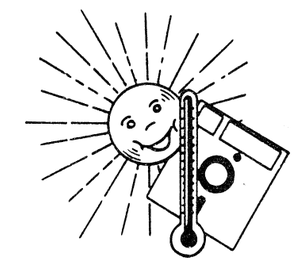

Do not write outside the label area on diskettes.

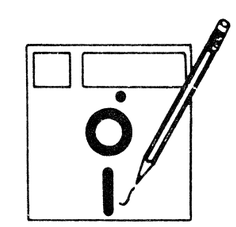

DISKETTE DRIVE PARTS

130 Parts Location

Cover Assembly (420 through 470)

- (A) Latch assembly (440 and 450)
- (B) Collet (460 and 470)

Open the diskette drive cover assembly to insert a diskette. The collet centers and holds the diskette against the drive hub when the cover is closed.

AC Drive Parts (560 through 850)

- (G) Belt (560 through 590)
- (E) Drive motor (600 and 610)
- (J) Drive pulley (620 and 630)
- (H) Idler assembly (640 and 650)

The AC drive parts turn the diskette at 360 rpm.

Stepper Drive Parts (680 through 780)

- (K) Stepper motor (680 and 690)
- (R) Stepper motor pulley (700 and 710)
- (S) Stepper motor pulley clamp (700 and 710)
- (P) Stepper drive band (730 through 760)
- (L) Drive band idler assembly (770 and 780)

The stepper motor shaft turns in either direction under control of access pulses.

The stepper drive parts move the heads across the diskette surface.

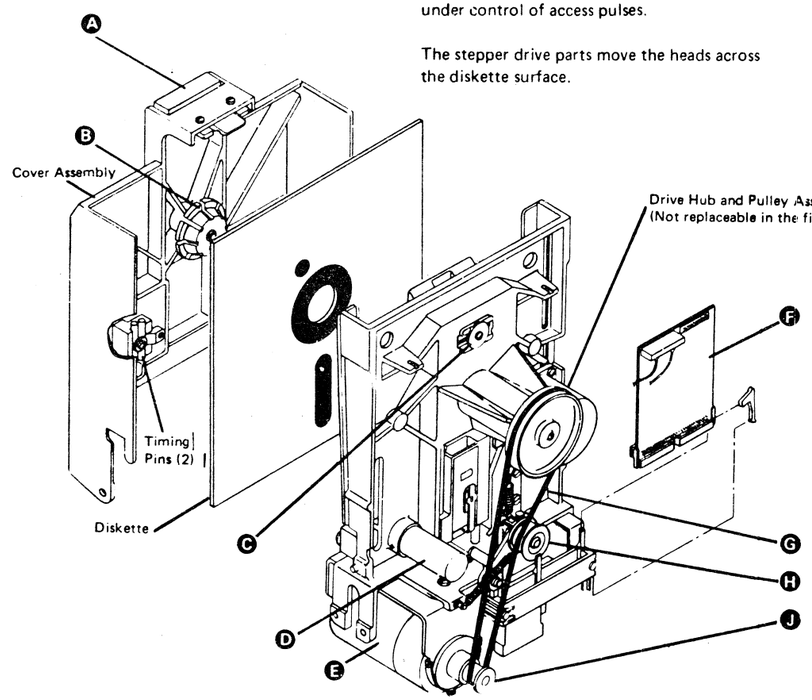

Rear View

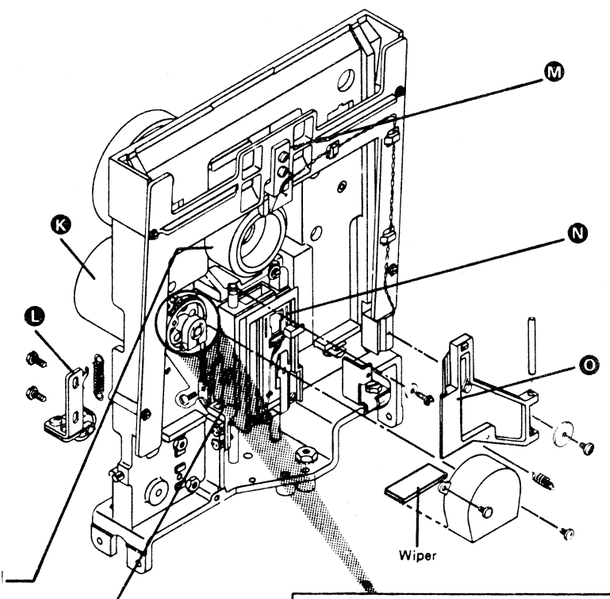

Front View

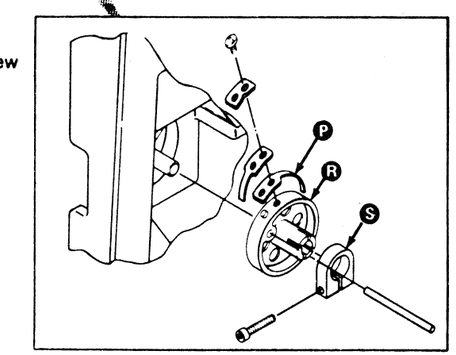

Read/Write Parts

- (N) Head/Carriage Assembly (480 through 510)

Two read/write heads, which are mounted on a common carriage, move under control of the stepper motor. The read/write heads perform the read, write, and erase functions of the diskette drive.

Head Load Parts

- (D) Solenoid (520 through 550)
- (O) Bail (520 through 550)

The head load solenoid causes the bail to load the heads.

Index Detection Parts

- (M) LED (800 through 830)
- (C) PTX (800 and 840 through 860)

The LED (the light source) and the PTX (the light sensing device) work together to detect the diskette index.

Diskette Drive Control Card

- (F) 53FD (870 through 920)

The diskette drive control card has the drive circuits for the stepper motor, the head load solenoid, and the write and erase functions. This control card also has the amplifiers for the read heads and the index sensing circuits.

Note: Different control card versions are shipped. Refer to 890 to verify which card version is plugged in your diskette drive.

THEORY

140 Typical Operation

1. The host system starts the diskette drive motor.

2. Inserting a diskette and closing the cover assembly starts the diskette turning.

3. Index pulses are sensed every revolution (166.7 ms). The diskette sense line identifies the type of diskette inserted; an active level indicates a diskette 2 or 2D.

4. Seeking to the selected cylinder is done by sequencing the four access lines to move the head/carriage assembly in (toward the hub) or out (away from the hub). Activating two sequential access lines turns the stepper motor a distance equal to one cylinder. The two access lines for the last cylinder reached remain activated. Data is valid after 40 ms (minimum time for the head and carriage assembly to stop).

5. A head load command can be issued before or during a seek to activate the head load solenoid. Data is valid 80 ms after the heads are loaded. Head location is found by reading the address bytes of the first available ID (identifier) field.

6. Reading or writing can occur 40 ms after seeking to the last cylinder or 80 ms after the heads are loaded.

7. The heads are unloaded after the read or write operation if no other read or write operation is to be performed.

150 Typical Timing Sequence

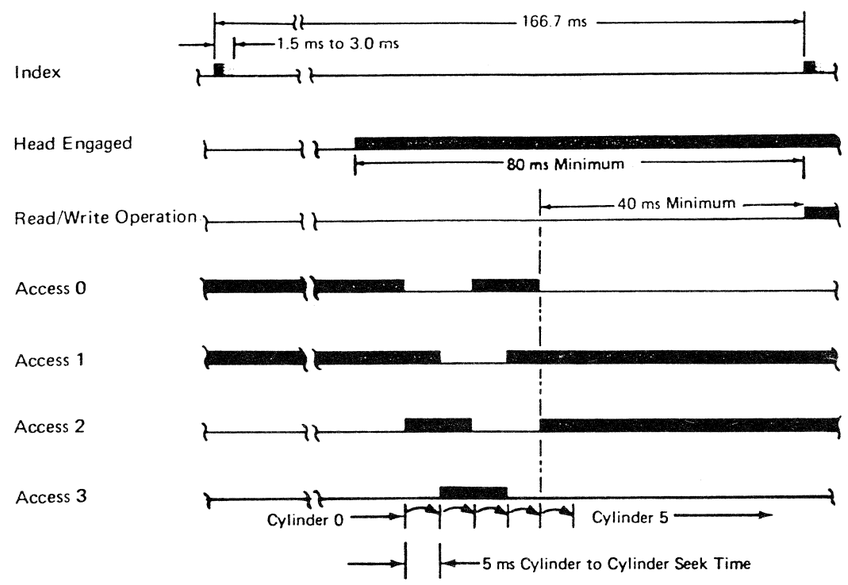

Note: Seeking and head loading are not timed to the index.

160 Control Card Interface

Refer to 920 for Detailed Description

170 Read/Write Principles

Write Data

For each change of the write data signal, the current switches in the read/write head. This process records the data on the diskette surface.

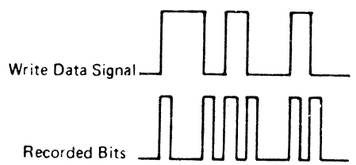

In FM encoding, the time between clock pulses is 4 µs. Both a clock bit and either a data bit for a 1 or no data bit for a 0 are recorded within this 4 µs period.

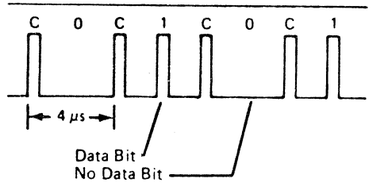

In MFM encoding, the constant clock pulse is removed. A clock bit is recorded only when a 0 (no data bit) is followed by a 0. Therefore, the time between data bits is 2 µs. Either a data bit for a 1 or no data bit for a 0 is recorded within this 2 µs period.

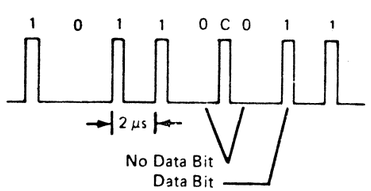

Read Data

- The sine wave signal for FM encoding is:

  125 kHz: 13 to 560 mV (all 0's)
  250 kHz: 6.5 to 420 mV (all 1's)

- The sine wave signal for MFM encoding is :

  125 kHz: 13 to 560 mV (alternate 0's and 1's)
  250 kHz: 6.5 to 420 mV (all 0's or all 1's)

  The voltage is higher at the outer tracks because of the higher track speeds and lower bit density.

  For FM, an all 0's pattern has a higher voltage amplitude than an all 1's pattern.

  For MFM, an alternate 0's and 1's pattern has a higher voltage amplitude and is half the frequency of an all 0's or all 1's pattern.

File Data

File data is a series of clock and data pulses that represent the read data. These pulses are 150 to 500 ns in duration and are sent to the VFO circuits for separation of the clock and the data pulses.

Write Operation

For a write operation, write gate activates the write circuits and deactivates the read circuits as shown A.

Erase gate is active during a write operation to erase the edges of the data track just recorded. This erasing process prevent crosstalk between tracks during later read operations.

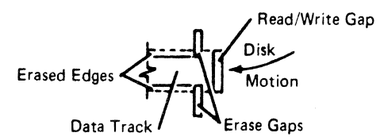

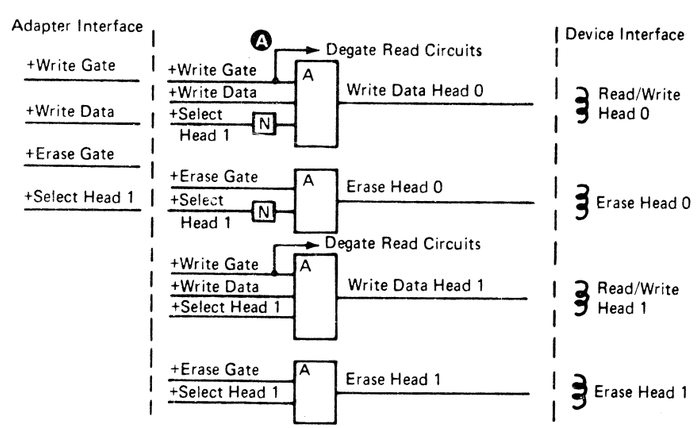

Format Write Operation

The format write operation writes a full track replacing all the ID (identifier) fields, data fields, and gaps. The index to first ID field gap is 73 (146 for MFM) 8-bit bytes.

Write gate is activated within 50 (100 for MFM) bytes from the leading edge of the index pulse B. Write gate is deactivated within 51 (102 for MFM) bytes after the leading edge of the next index pulse C.

Erase gate is activated the same time as write gate. However, erase gate is deactivated 537 µs after write gate is deactivated D.

Record (Update) Write Operation

Update operations are performed on a data field and its VFO sync field only. ID fields and gaps are not written.

Write gap is activated within 237 µs after the last ID character is read E. Write gate is deactivated within 5 µs after the last clock of the 2-bit pad is written F.

Erase gate is activated 537 µs after write gate G and is deactivated 537 µs after the fall of write gate H.

The new VFO sync field begins when write gate is activated J.

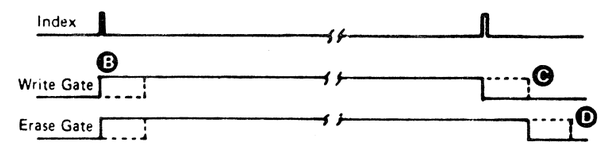

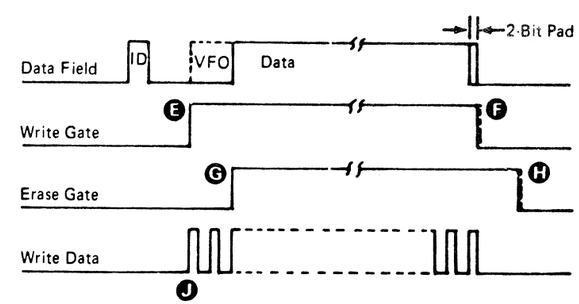

180 FM Scoping Charts

Note: Use Tektronix 453, 454, or similar oscilloscope with x10 probes.

Channel A sweep mode	Normal
Channel A level	+
Channel A coupling	dc
Channel A slope	+
Channel A source	External
Trigger	Normal
Mode	Add
Channel 1 volts/division	5 mV/cm
Channel 2 volts/division	5 mV/cm
Channel 1 input	ac
Channel 2 input	ac
Invert	Pull out
Times per division	2ms/cm
Connect channel 1 to	Preamp TP1 (A)
Connect channel 2 to	Preamp TP2 (B)
Connect trigger to	+Index test pin (C)

Observe: The amplitude of the read signal should be between 6.5 to 560 mV.

Read Head Signal at TP1 and TP2

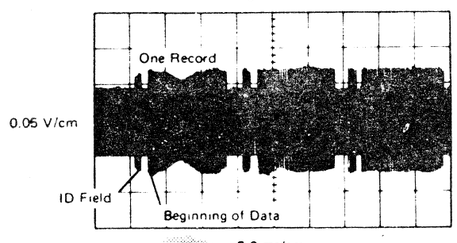

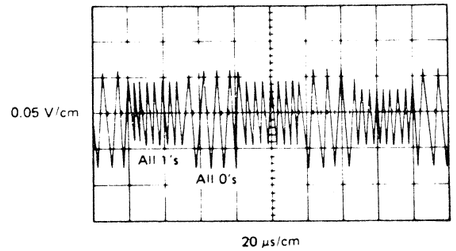

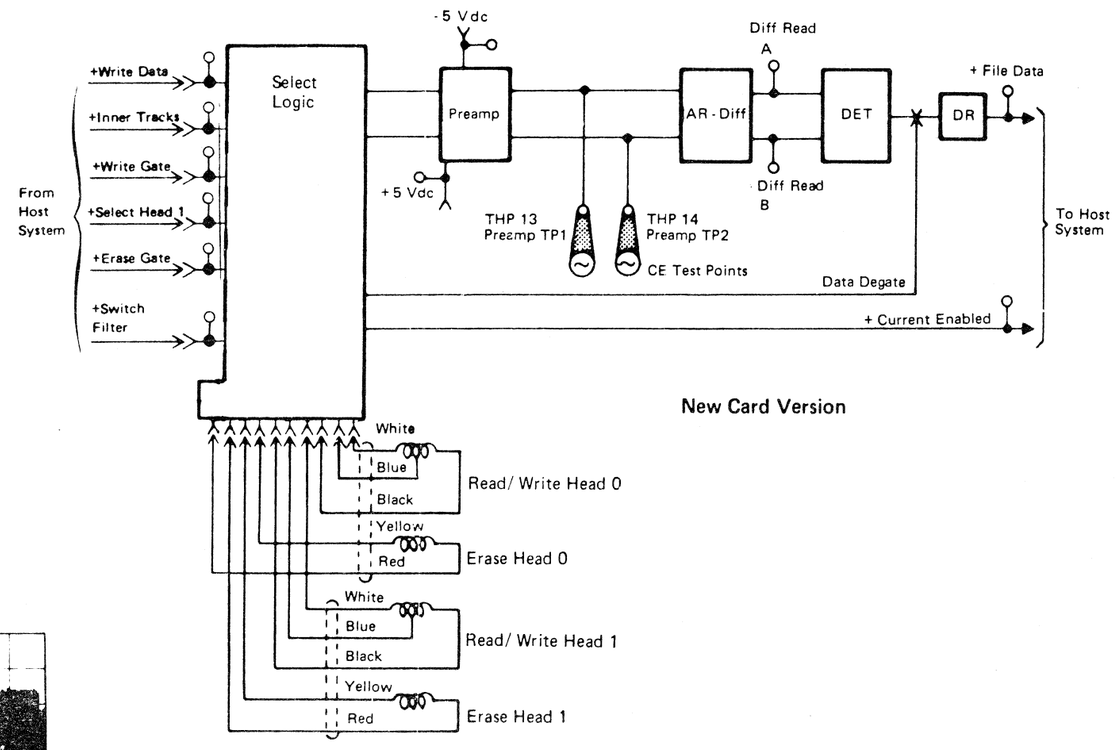

New Card Version

KEY	SIGNAL	PIN
(A)	PREAMP TP1	THP13
(B)	PREAMP TP2	THP14
(C)	+INDEX	TPB9
(D)	+FILE DATA	TPB5

Note: See paragraph 890 for test pin locations

Note: Use Tektronix 453, 454, or similar oscilloscope with x10 probes.

Channel A sweep mode	Normal
Channel A level	+
Channel A coupling	dc
Channel A slope	+
Channel A source	External
Trigger	Normal
Mode	Channel 1
Channel 1 volts/division	2.0 V/cm
Channel 1 input	dc
Times per division	2µs/cm
Connect channel 1 to	+File data (D)
Connect trigger to	+Index test pin (C)

Observe: Clock pulses every 4 µs. Pulse duration should be between 100 and 500 ns. Pulses amplitude should be between 2.4 and 4.2 volts.

File Data
Example: 01010

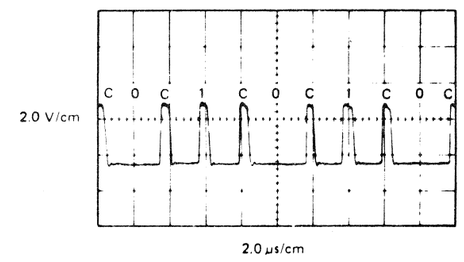

190 MFM Scoping Charts

Note: Use Tektronix 453, 454, or similar oscilloscope with x10 probes.

Channel A sweep mode	Normal
Channel A level	+
Channel A coupling	dc
Channel A slope	+
Channel A source	External
Trigger	Normal
Mode	Add
Channel 1 volts/ division	5 mV/cm
Channel 2 volts/division	5 mV/cm
Channel 1 input	ac
Channel 2 input	ac
Invert	Pull out
Times per division	2ms/cm
Connect channel 1 to	Preamp TP1 (A)
Connect channel 2 to	Preamp TP2 (B)
Connect trigger to	+Index test pin (C)
Observe:	The amplitude of the read signal should be between 6.5 to 560 mV.

Read Head Signal at TP1 and TP2

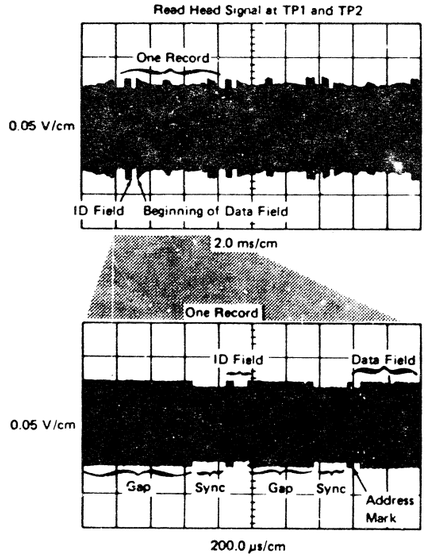

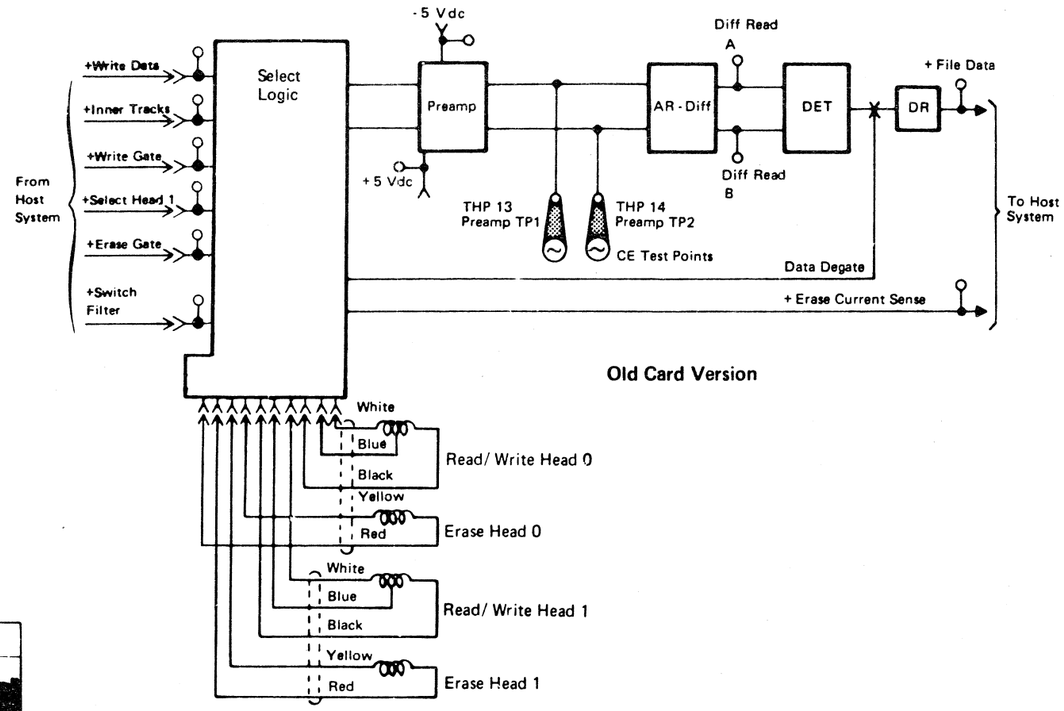

Old Card Version

KEY	SIGNAL	PIN
(A)	PREAMP TP1	THP13
(B)	PREAMP TP2	THP14
(C)	+INDEX	TPB9
(D)	+FILE DATA	TPB5

Note: See paragraph 890 for test pin locations

Note: Use Tektronix 453, 454, or similar oscilloscope with x10 probes.

Channel A sweep mode	Normal
Channel A level	+
Channel A coupling	dc
Channel A slope	+
Channel A source	External
Trigger	Normal
Mode	Channel 1
Channel 1 volts/division	1.0 V/cm
Channel 1 input	dc
Times per division	2 us/cm
Connect channel 1 to	+File data (D)
Connect trigger to	+Index test pin (C)
Observe:	Clock or data pulses every 2 to 4 µs. Pulse duration should be between 100 and 500 ns. Pulse amplitude should be between 2.4 and 4.2 volts.

File Data
Bit Pattern: Hex 'E5E5'
Example: 0101111001

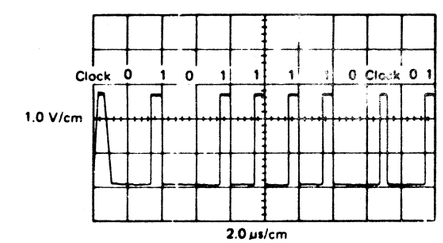

DISKETTE HANDLING

400 Diskette Insertion

1. Open the diskette drive cover assembly.
2. Remove the diskette from its protective envelope.
3. Place the diskette squarely into the diskette drive (with the label facing the cover).
4. Close the diskette drive cover assembly.

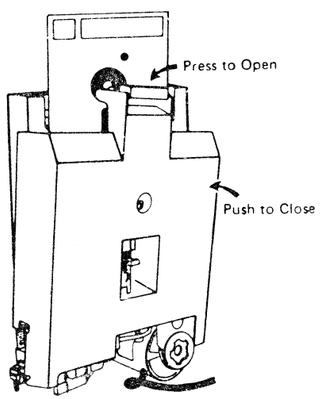

410 Diskette Removal

1. Open the diskette drive cover assembly.
2. Remove the diskette.
3. Insert the diskette in a protective envelope.
4. Close the diskette drive cover assembly.

COVER ASSEMBLY

420 Cover Removal

Select the removal procedure to match the installed mounting position.

Cover (Vertical Mount)

1. Open the diskette drive cover assembly.
2. Loosen the two pivot screws with a wrench.
3. While holding the cover assembly, remove the two pivot screws.
4. Lift the cover away from the diskette drive.

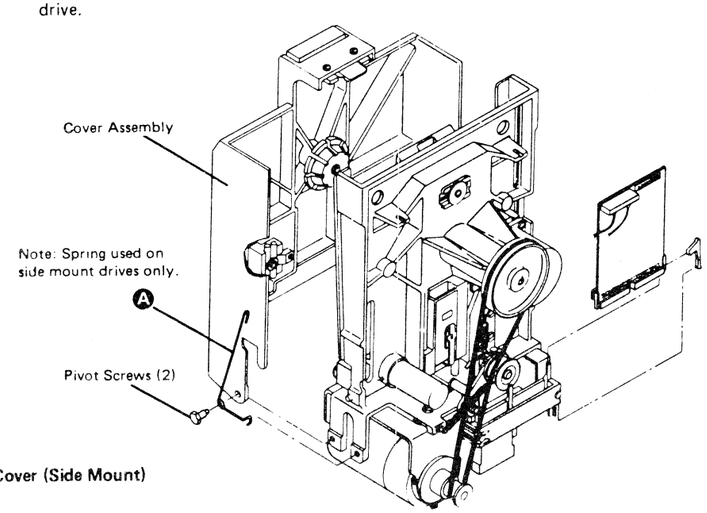

Cover (Side Mount)

1. Open the diskette drive cover assembly.
2. Disconnect the spring A from the cover.
3. Loosen the two pivot screws with a wrench.
4. While holding the cover assembly, remove the pivot screws.
5. Lift the cover away from the diskette drive.

430 Cover Replacement

Select the replacement procedure to match the installed mounting angle.

Cover (Vertical Mount)

1. Align the diskette drive cover assembly with the mounting holes in the casting. Then reinstall the two pivot screws.
2. Tighten the pivot screws with a wrench.
3. Close the diskette drive cover assembly.

Cover (Side Mount)

1. Align the diskette drive cover assembly with the mounting holes in the casting. Then reinstall the two pivot screws. (Ensure that the spring A is installed.)
2. Tighten the pivot screws with a wrench.
3. Connect the spring A to the cover.
4. Close the diskette drive cover assembly.

440 Latch Assembly Removal

Select the removal procedure to match the latch installed.

Latch (Standard)

1. Open the diskette drive cover assembly.
2. Remove the two latch mounting screws C.
3. Pull the latch B toward the front of the cover assembly.

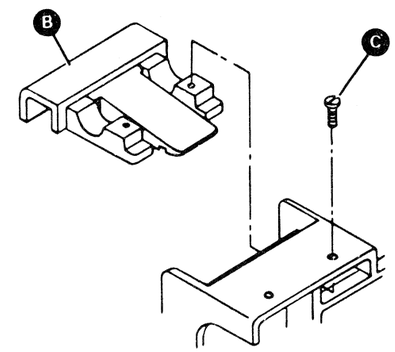

Latch (Side Mount)

1. Open the diskette drive cover assembly.
2. Remove the two latch mounting screws F.
3. Carefully remove the latch E and the two pivots by pulling the latch toward the rear of the cover assembly. Do not lose the spring D.

450 Latch Assembly Replacement

Select the replacement procedure to match the latch installed.

Latch (Standard)

1. Place the latch B into position in the cover assembly.
2. Reinstall the two latch mounting screws C.
3. Close the diskette drive cover assembly.

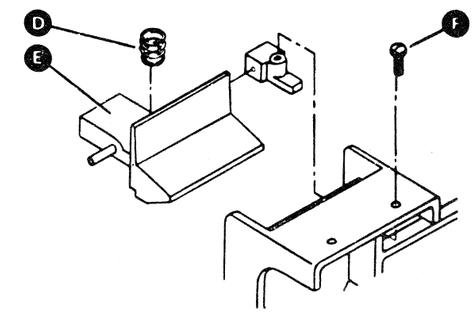

Latch (Side Mount)

1. Place the latch E into the cover assembly. Then position the two pivots. Be sure to reinstall the spring D.
2. Reinstall the two latch mounting screws F.
3. Close the diskette drive cover assembly.

460 Collet Removal

1. Remove the diskette drive cover assembly (refer to 420).
2. Remove the mounting screw A.
3. Remove the collect assembly B along with the parts on the collet assembly shaft.
4. Remove the clip C and the collet.
5. Inspect all parts for wear and install new parts as needed.

470 Collet Replacement

1. Reinstall the collet and the clip C.
2. Reinstall the remaining parts on the collet assembly shaft in the order shown.
3. Reinstall the collet assembly B and the mounting screw A.
4. Reinstall the diskette drive cover assembly (refer to 430).

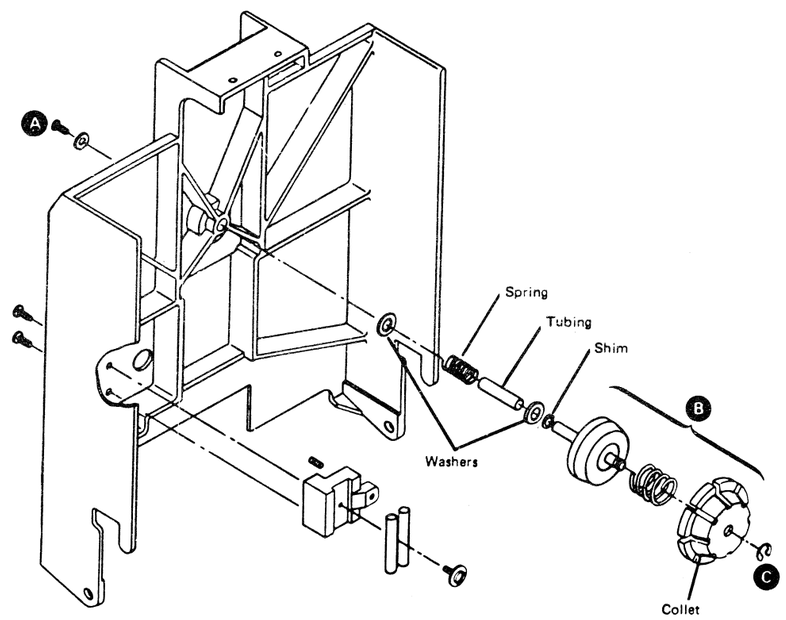

HEAD/CARRIAGE ASSEMBLY

WARNING
The head/carriage assembly is adjusted and tested at the factory. Do not repair or clean any part of this assembly.

480 Head/Carriage Service Check

WARNING
The head/carriage service check must be performed with the diskette drive installed (or in the same position as when installed) or the adjustment might not be accurate.

1. Power off.
2. Remove the diskette drive cover assembly (refer to 420).
3. Remove the wiper assembly B.
4. Insert a strip of clean paper between the heads to keep the head surfaces from touching.
5. Turn the stepper motor pulley by hand to cylinder 40 and insert a timing pin A.
6. Disconnect the drive motor power cable.

DANGER
Voltage is still present at the socket when the power cable is disconnected.

7. Power on.

WARNING
To do the following procedure correctly, make sure the access lines are not active and cannot be activated by an external source.

8. Install a jumper from TPA 13 (ground) to TPH 11 (- align access 0), see 490 A
9. Does the timing pin pass freely through the stepper motor pulley into the timing slot in the casting?
   Y N
   - Remove the timing pin A.
   - Remove the jumper 490 A.
   - Power off.
   - Go to 490 step 5.
10. Remove the timing pin A.
11. Remove the jumper end from THP11. Then install the jumper end to TPB10 (MC-3).
12. Verify that this is cylinder 39 by visually checking for no gap C between the timing pointer and the timing block.
13. Remove the jumper end from TPB10 (MC-3). Then install the jumper end to THP11 (-align access 0).
14. Verify that this is cylinder 40 by visually checking that the timing hole in the pulley lines up with the timing slot in the casting. (Do not use a timing pin.)
15. Verify the 0.508 mm (o.20 inch)gap D as follows:
    - Visually check that the head/carriage assembly does not move while carefully inserting a 0.0195 thickness gauge E
    - Visually check that the head/carriage assembly moves slightly while carefully inserting a 0.021 thickness gauge E

    Note: Because of the torque characteristics of the stepper motor, this step can be performed only once. If it is necessary to perform this step again, go back to step 11 of this service check.
16. Is the adjustment correct ?
    Y N
    - Go to 490, step 13.
17. Remove the jumper 490 A
18. Reinstall the wiper assembly B
19. Was the head/carriage assembly replaced?
    Y N
    - Remove the paper from between the heads.
    - Reinstall the cover assembly (refer to 430).
    - Power off.
    - Connect the drive motor power cable.
    - Power on.
    - End of procedure.
20. Go to 520, step 6.

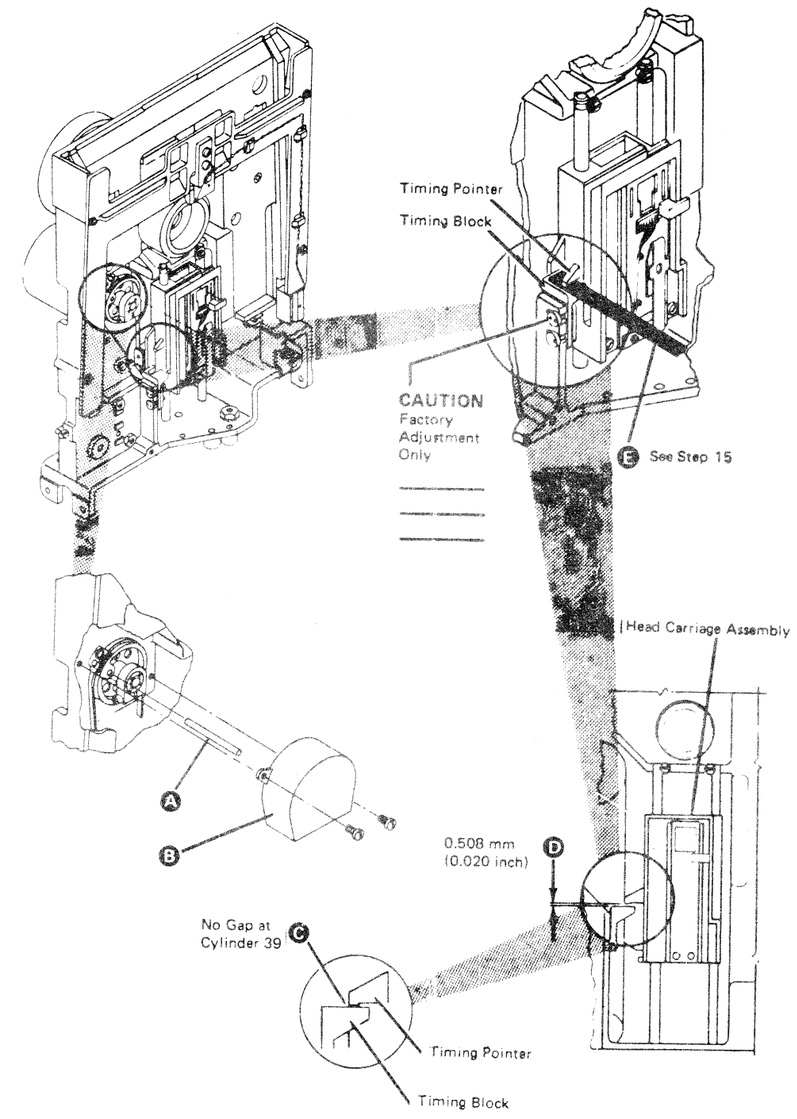

490 Head/Carriage Adjustment

CAUTION
The head/carriage assembly adjustment must be performed with the diskette drive installed (or in the same position as when installed) or the adjustment might not be accurately made.

1. Power off.
2. Remove the diskette drive cover assembly (refer to 420).
3. Remove the wiper assembly (F).
4. Insert a strip of clean paper between the heads to prevent the head surfaces from touching.
5. Measure and record the gap (B) between the stepper motor pulley and the casting.

   Gap is:

6. Loosen the clamp screw (C) so the stepper motor shaft can turn inside the pulley.
7. Turn the stepper motor pulley by hand to cylinder 40 and insert a timing pin (E).
8. Disconnect the drive motor power cable.

   DANGER
   Voltage is still present at the socket when the power cable is disconnected.

9. Power on.

WARNING
To do the following procedure correctly, make sure the access lines are not active and cannot be activated by an external source.

10. Install a jumper (A) from TPA13 (ground) to THP11 (-align access 0).
11. Make the gap (B) the same size as the gap recorded in step 5 and tighten the clamp screw (C). (Ensure that the timing pin passes freely through the stepper motor pulley into the timing slot in the casting.)
12. Remove the timing pin (E).
13. Loosen the two band clamping screws (D).
14. Remove the jumper end from THP11. Then install the jumper end to TPB10 (MC-3).
15. Remove the jumper end from TPB10. Then install the jumper end to THP11 (-align access 0).
16. Verify that this is cylinder 40 by visually checking that the timing hole in the pulley lines up with the timing slot in the casting. (Do not use a timing pin.)
17. Insert a 0.020 thickness gauge (G) between the timing pointer and the timing block. (Put light finger pressure to the top of the carriage to hold the thickness gauge in place.)
18. Tighten the band clamping screws (D). (Ensure that the drive band is straight.)
19. Go to 480, step 11.

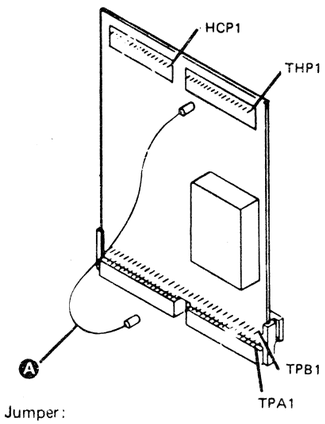

Jumper:

Cylinder 40	Cylinder 39
THP 11 (-align access 0) -- to -- TPA 13 (ground)	TPB10 (MC-3) -- to -- TPA 13 (ground)

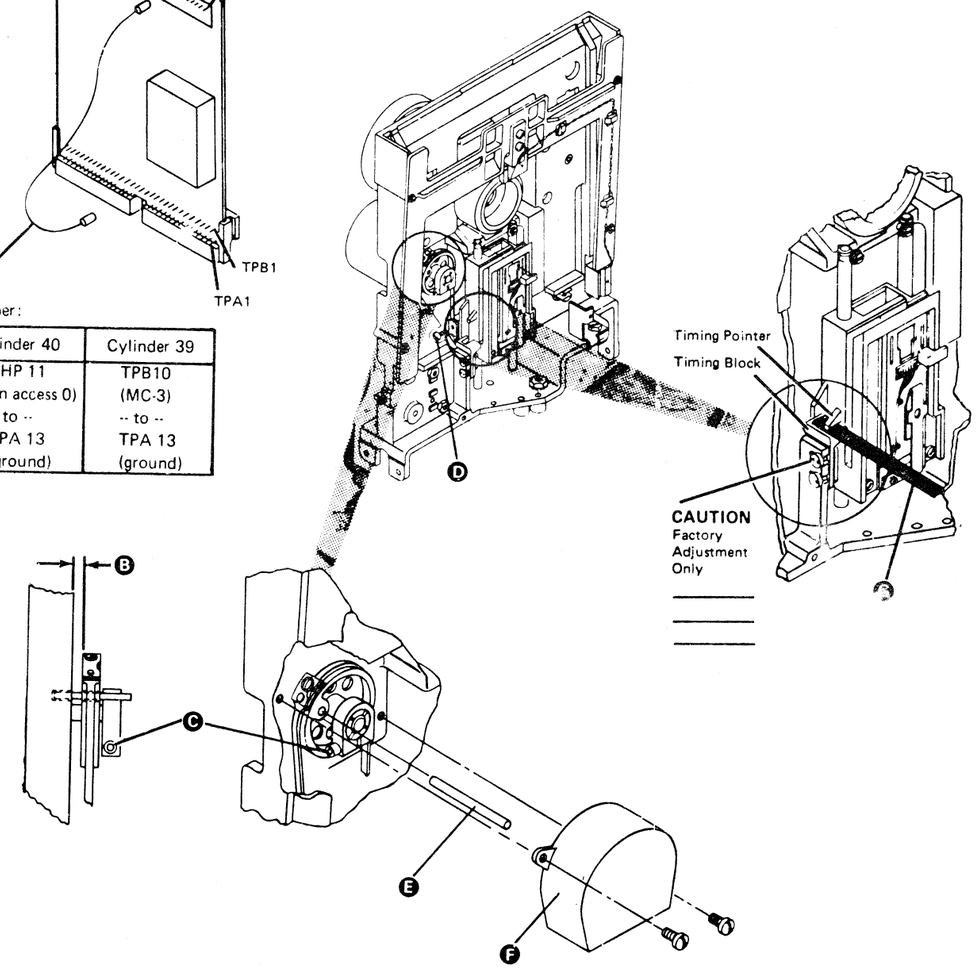

500 Head/Carriage Removal

1. Power off.
2. Remove the diskette drive cover assembly (refer to 420).
3. Remove the wiper assembly C.
4. Carefully remove the head cable from the diskette drive control card. (Remember the cable path for the replacement procedure.)
5. Place the head/carriage assembly to about cylinder 40.
6. Remove the two band clamping screws A and the clamp. Place the head and carriage assembly at the lower limit (cylinder 00).
7. Loosen the screw G and remove the guide rod F.
8. Carefully lift and turn the head/carriage assembly to remove it from the guide rod J.

510 Head/Carriage Replacement

WARNING
When installing the head/carriage assembly, ensure that the bail K is under the tab L of the carriage arm. Ensure that the bail return spring H is properly installed. Also, ensure that a strip of clean paper is inserted between the head surfaces during installation.

1. Carefully install the head/carriage assembly on the guide rod J. Then place the head/carriage assembly at the lower limit (cylinder 00).
2. Reinstall the guide rod F and tighten the screw G. (Ensure that the guide rod notch E is aligned with the screw and is seated as shown D.)
3. Place the head/carriage assembly to about cylinder 40.
4. Reinstall the clamp and the two band clamping screws A. (Do not tighten these two screws now.)
5. Carefully place and connect the head cable to the diskette drive control card.
6. Turn the stepper motor pulley to cylinder 40, then insert a timing pin B.
7. Disconnect the drive motor power cable.

DANGER
Voltage is still present at the socket when the power cable is disconnected.

8. Power on.

WARNING
To do the following procedure correctly, make sure the access lines are not active an cannot be activated by an external source.

9. Install a jumper from TPA 13 (ground) to THP11 (align access 0), see figure 490 A
10. Does the timing pin pass freely through the stepper motor pulley into the timing slot in the casting?
    Y N
    - Remove the timing pin B.
    - Remove the jumper 490 A.
    - Power off.
    - Go to 490, step 5.
11. Remove the timing pin B.
12. Go to 490, step 14.

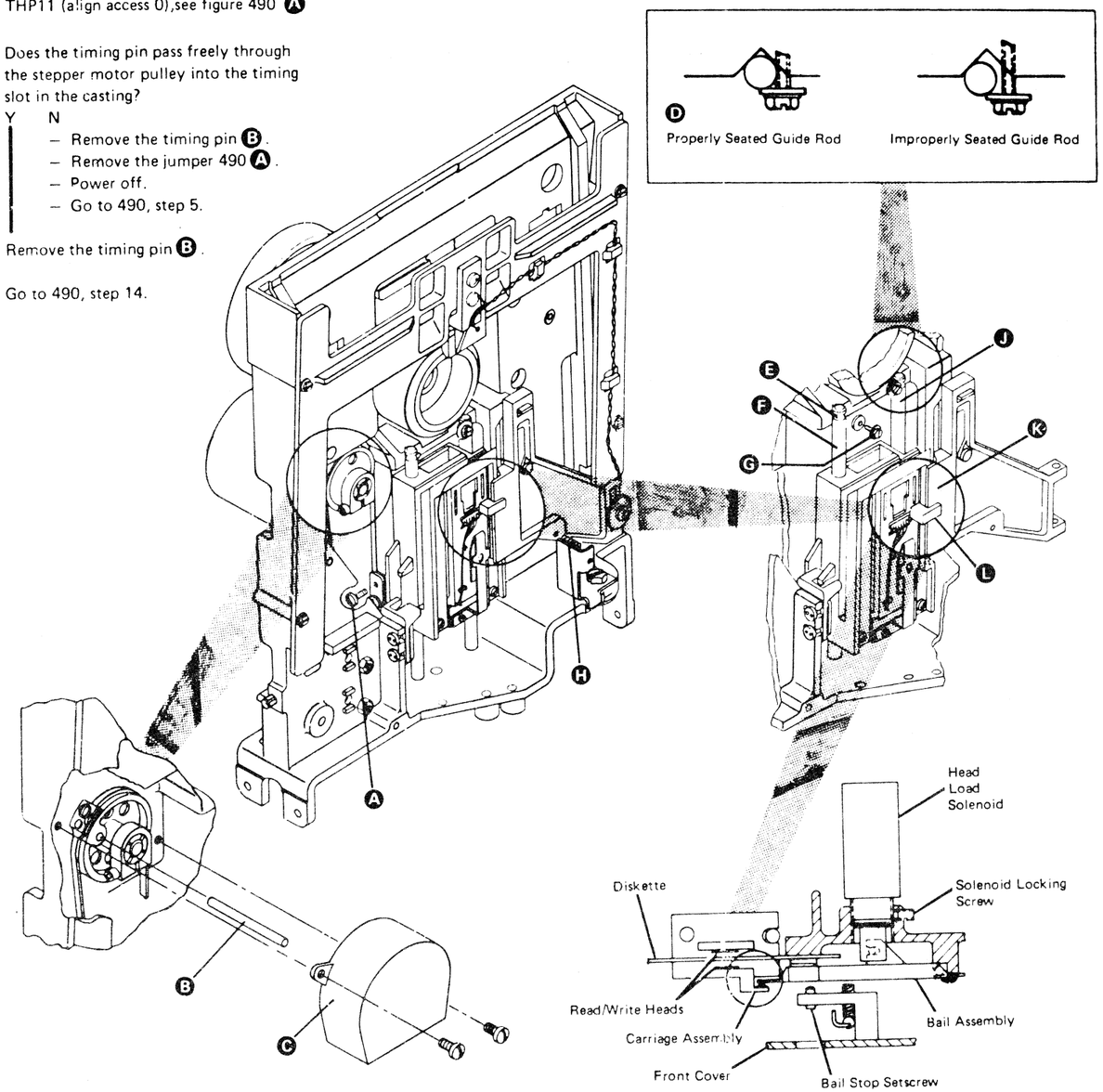

HEAD LOAD SOLENOID AND BAIL

520 Solenoid and Bail Service Check

1. Power off.
2. Disconnect the drive motor power cable.

   DANGER
   Voltage is still present at the socket when the power cable is disconnected.

3. Remove the diskette drive cover assembly (refer to 420).
4. Insert a strip of clean paper between the heads to prevent the head surfaces from touching.
5. Power on.
6. Install a jumper Ⓐ to activate the head load solenoid.
7. Verify a 0.4 ± 0.13 mm (0.015 ± 0.005 inch) gap Ⓒ between the bail and the carriage arm for all of the carriage movement (cylinder 00 to cylinder 76).

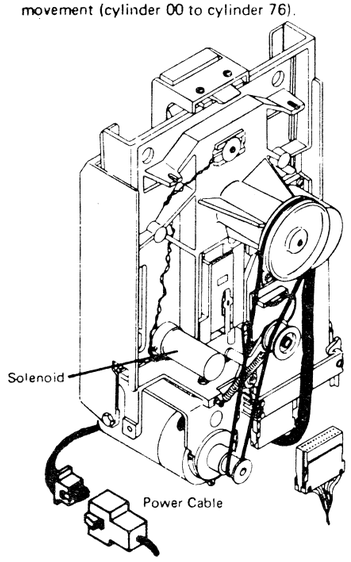

8. Is the gap OK?
   Y N
   – Go to 530, step 7.
9. Remove the jumper Ⓐ.
10. Remove the paper from between the heads.
11. Reinstall the diskette drive cover assembly (refer to 430).
12. With the head load solenoid deactivated and the cover closed, visually check for a gap Ⓑ of approximately 2,4 to 3,2 mm (3/32 to 4/32 inch) of an inch between the head surfaces. (This gap cannot be measured).
13. Is the gap OK?
    Y N
    – Go to 530, step 14.
14. Power off.
15. Connect the drive motor power cable.
16. Power on.

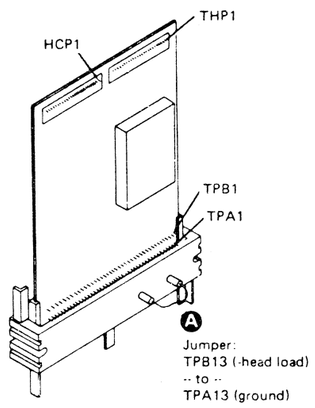

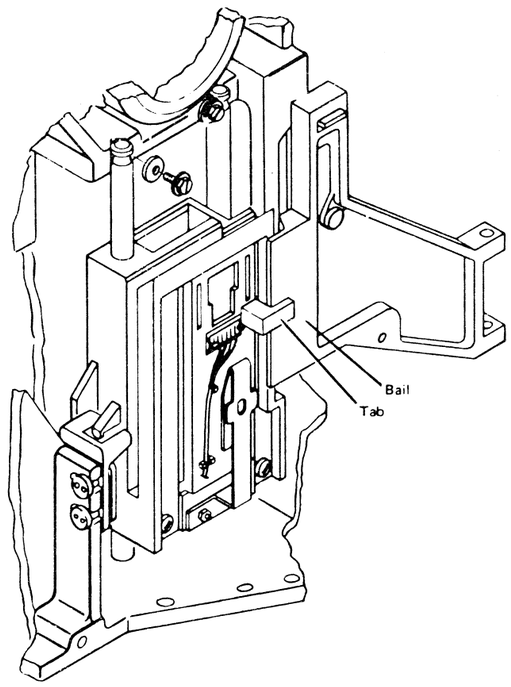

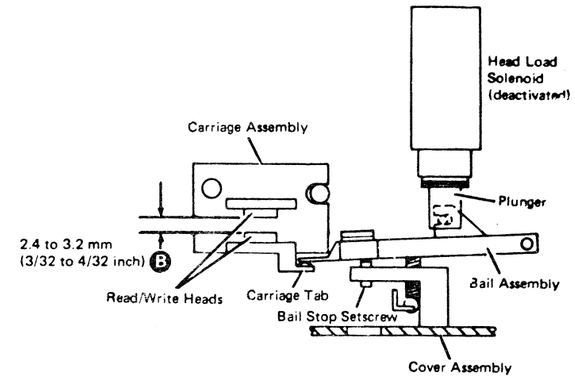

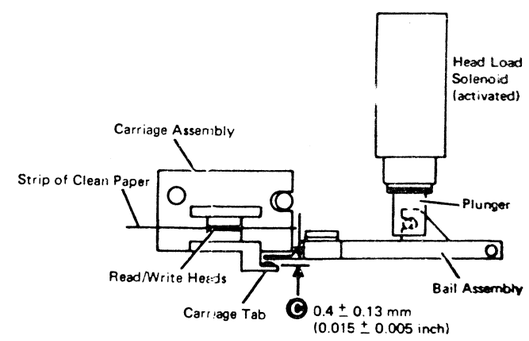

530 Solenoid and Bail Adjustment

1. Power off.

2. Disconnect the drive motor power cable.

   DANGER
   Voltage is still present at the socket when the power cable is disconnected.

3. Remove the diskette drive cover assembly (refer to 420)

4. Insert a strip of clean paper between the heads to prevent the head surfaces from touching.

5. Power on.

6. Install a jumper F to activate the head load solenoid.

   DANGER
   The solenoid case becomes hot after continuous use.

7. Loosen the solenoid locking screw B.

8. Turn the solenoid in the casting for a 0.4 ± 0.13 mm (0.015 ± 0.005 inch) gap C between the bail and the carriage arm (a clockwise turn decreases the gap).

9. Is the gap OK for all of the carriage movement (cylinder 00 to cylinder 76)?

   Y N
   – Go back to step 8.

10. Tighten the solenoid locking screw.

    WARNING
    Check for clearance between the idler arm and the solenoid. Reform the tab on the idler arm to obtain the clearance.

11. Remove the jumper F.

12. Remove the paper from between the heads.

13. Reinstall the diskette drive cover assembly (refer to 430).

14. With the head load solenoid deactivated and the cover closed, visually check for a gap D of approximatly 3/32 to 4/32 of an inch between the head surfaces. (This gap cannot be measured.)

15. Is the gap OK?

    Y N
    – To correct the gap, turn the bail stop setscrew E clockwise until the heads just touch, then counterclockwise one complete turn.

16. Power off.

17. Connect the drive motor power cable.

18. Power on.

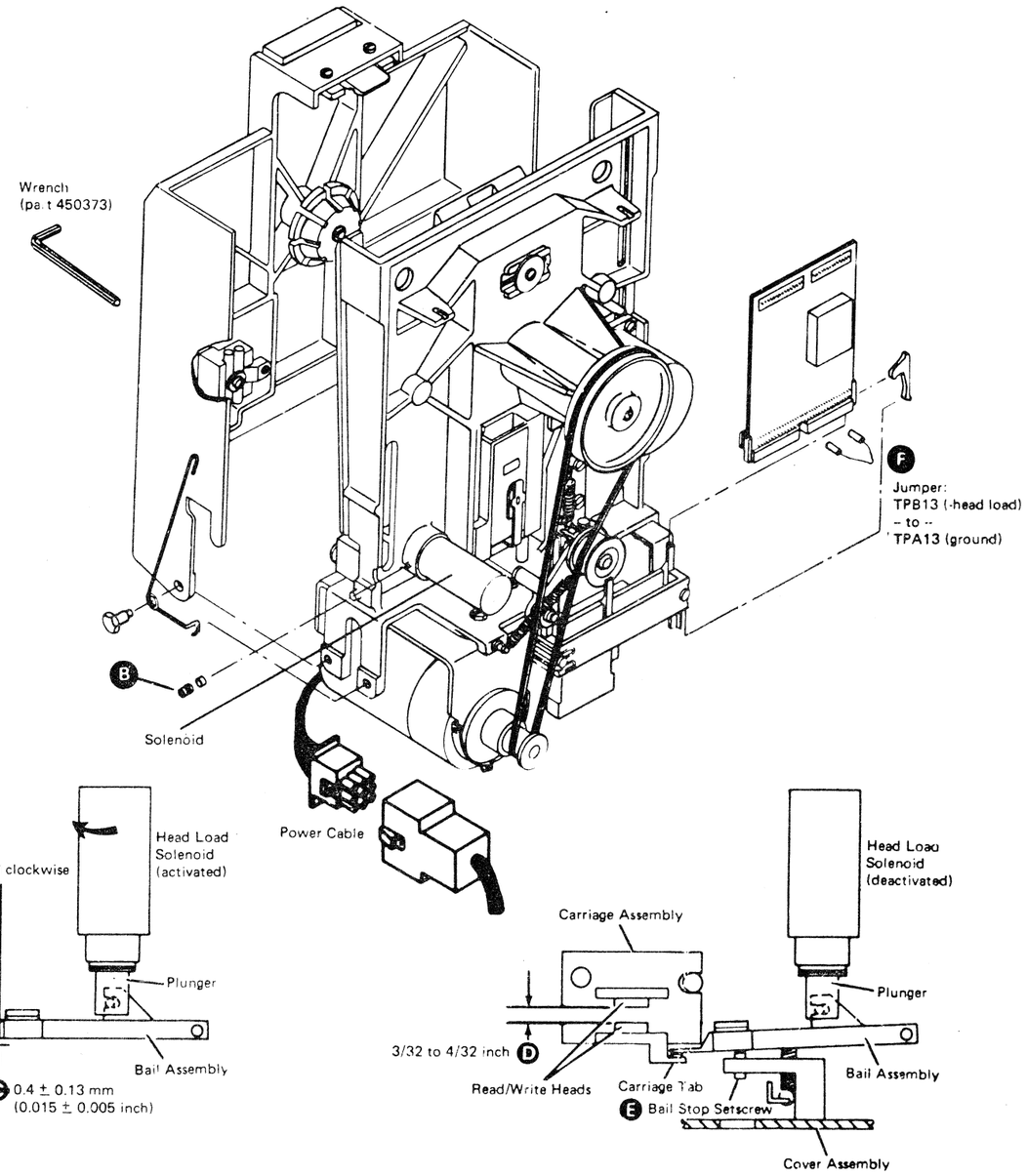

540 Solenoid and Bail Removal (All Versions)

1. Power off

2. Disconnect the drive motor power cable.

3. Remove the diskette drive cover assembly (refer to 420).

4. Insert a strip of clean paper between the heads to prevent the head surfaces from touching.

5. Remove the bail return spring E

6. Remove the mounting screw D and the bail C (This pulls the solenoid plunger out of the solenoid. Be careful not to damage the plated surface of the plunger).

Early Version

7.1 Remove safety cover H

7.2 Remove the solenoid leads G from the taper pin terminal block F (Remember the cable path for the replacement procedure).

Danger
The 28 ohm resistor becomes very hot during normal usage.

Late Version

7.1 Disconnect the diskette drive control cable from position A2 L

7.2 Remove the two screws K and the connector covers.

7.3 Remove the two solenoid Leads M by pushing down on the tabs with a small screwdriver.

8. Remove the plunger from the bail.

9. Loosen the solenoid locking screw A

10. Remove the head load solenoid by turning it counterclockwise.

550 Solenoid and Bail Replacement (All Versions)

1. Install the solenoid about four turns clockwise into the casting.

2. Install the plunger to the bail. (Be careful not to damage the plated surface at the plunger).

3. While inserting the plunger into the solenoid; reinstall the bail C and the mounting screw D Ensure that the bail is under the tab B of the carriage arm.

4. Reinstall the bail return spring E

Early Version

5.1 Carefully place and connect the solenoid leads G to the taper pin terminal block F

Note: The 28 ohm resistor must not touch any other components.

5.2 Replace safety cover H

Danger
Voltage is still present at the socket when the power cable is disconnected.

Late Version

5.1 Insert the two solenoid Leads M into the diskette drive control cable connector. Ensure that the locking tabs N on the terminals lock in the connector slots.

5.2 Replace the cable connector covers and the two screws K

5.3 Plug the cable into position A2 L on the diskette drive control card socket.

Danger
Voltage is still present at the socket when the power cable is disconnected.

6. Power on.

7. Go to 530, step 6.

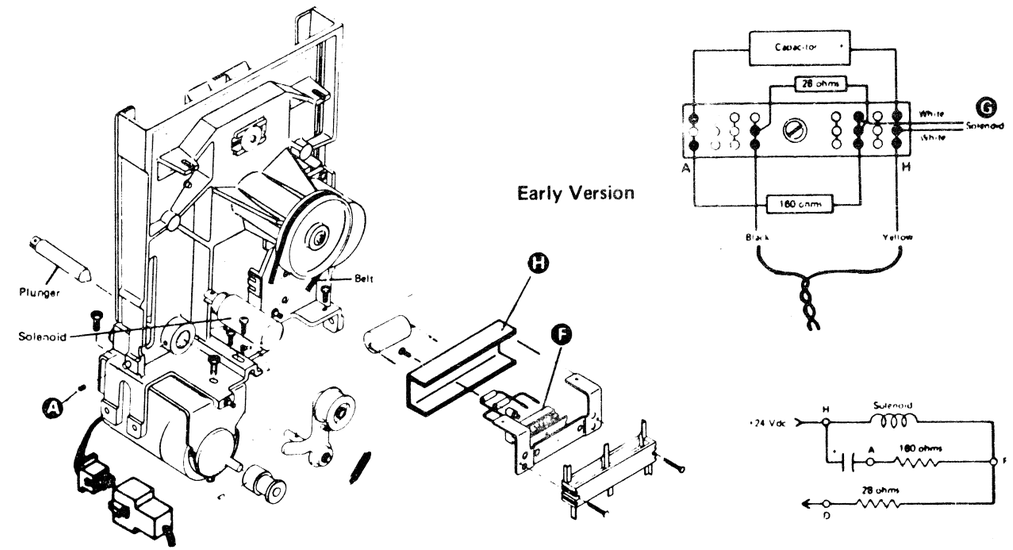

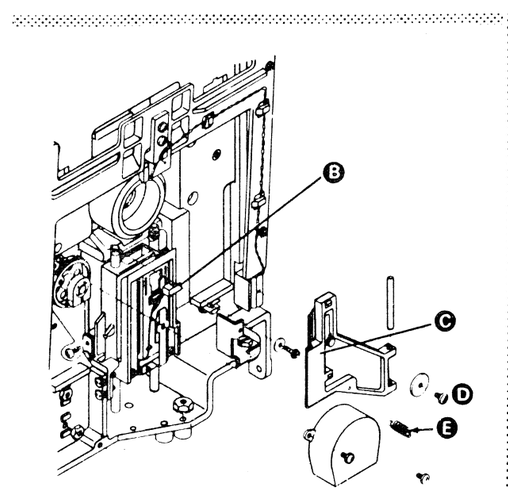

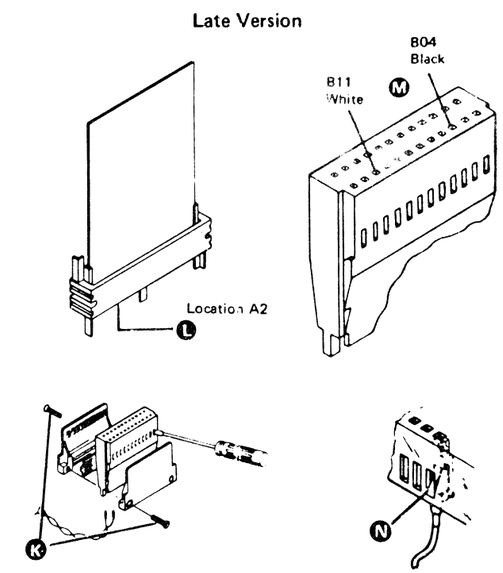

AC DRIVE PARTS

560 Belt Tracking Service Check

1. With power on, check that the drive belt is centered on the hub pulley and the drive pulley.
2. If the drive belt is not centered, go to 570.

570 Belt Tracking Adjustment

1. Power off.
2. Loosen the idler locking screw E and the drive pulley setscrew C.
3. Slide the idler assembly and the drive pulley in or out so the belt is centered on the hub pulley and the drive pulley when the drive pulley is turned counterclockwise.
4. Tighten the idler locking screw and the drive pulley setscrew. Ensure that the drive pulley setscrew is at 90° to the flat surface of the drive motor shaft.

   WARNING

   Check for clearance between the idler arm and the solenoid. Reform the tab on the idler arm to obtain the clearance.
5. Power on.
6. Go to 560.

580 Belt Removal

1. Power off.
2. Release the idler tension by hand and remove the driver belt.

590 Belt Replacement

1. Install the drive belt, ensuring that the idler is positioned as shown A.
2. Power on.
3. Go to 560.

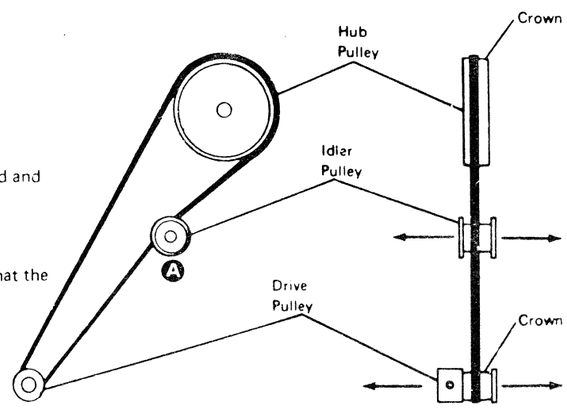

600 Drive Motor Removal

1. Power off.
2. Disconnect the drive motor power cable.
3. Remove the diskette drive cover assembly (refer to 420).
4. Remove the drive belt (refer to 580).

   DANGER
   The motor case becomes hot after continuous use.
5. Remove the two motor bracket mounting screws D and remove the drive motor and the bracket as an assembly. (Be careful not to lose the bail return spring and bracket G.)
6. Loosen the setscrew C. Then remove the drive pulley.

610 Drive Motor Replacement

1. Reinstall the drive pulley onto the new motor. Ensure that the setscrew C is at 90° to the flat surface of the motor shaft.

   DANGER
   (60 Hz motors)
   To prevent personal injury, ensure that the two large holes B in the motor case are positioned up and under the bracket.
2. Install the motor and bracket assembly and the two screws D. (Ensure that the bail return spring and bracket G is installed.)
3. Reinstall the diskette drive cover assembly (refer to 430).
4. Connect the drive motor power cable.
5. Go to 590.

620 Drive Pulley Removal

1. Power off.
2. Remove the drive belt (refer to 580).
3. Loosen the setscrew C. Then remove the drive pulley.

630 Drive Pulley Replacement

1. Install the drive pulley on the motor shaft with the setscrew C at 90° to the flat surface of shaft.
2. Go to 590.

640 Idler Assembly Removal

1. Power off.
2. Remove the drive belt (refer to 580).
3. Remove the idler spring F.
4. Remove the locking screw E and the idler assembly.

650 Idler Assembly Replacement

1. Install the idler assembly and the locking screw E.
2. Reinstall the idler spring F.
3. Go to 590.

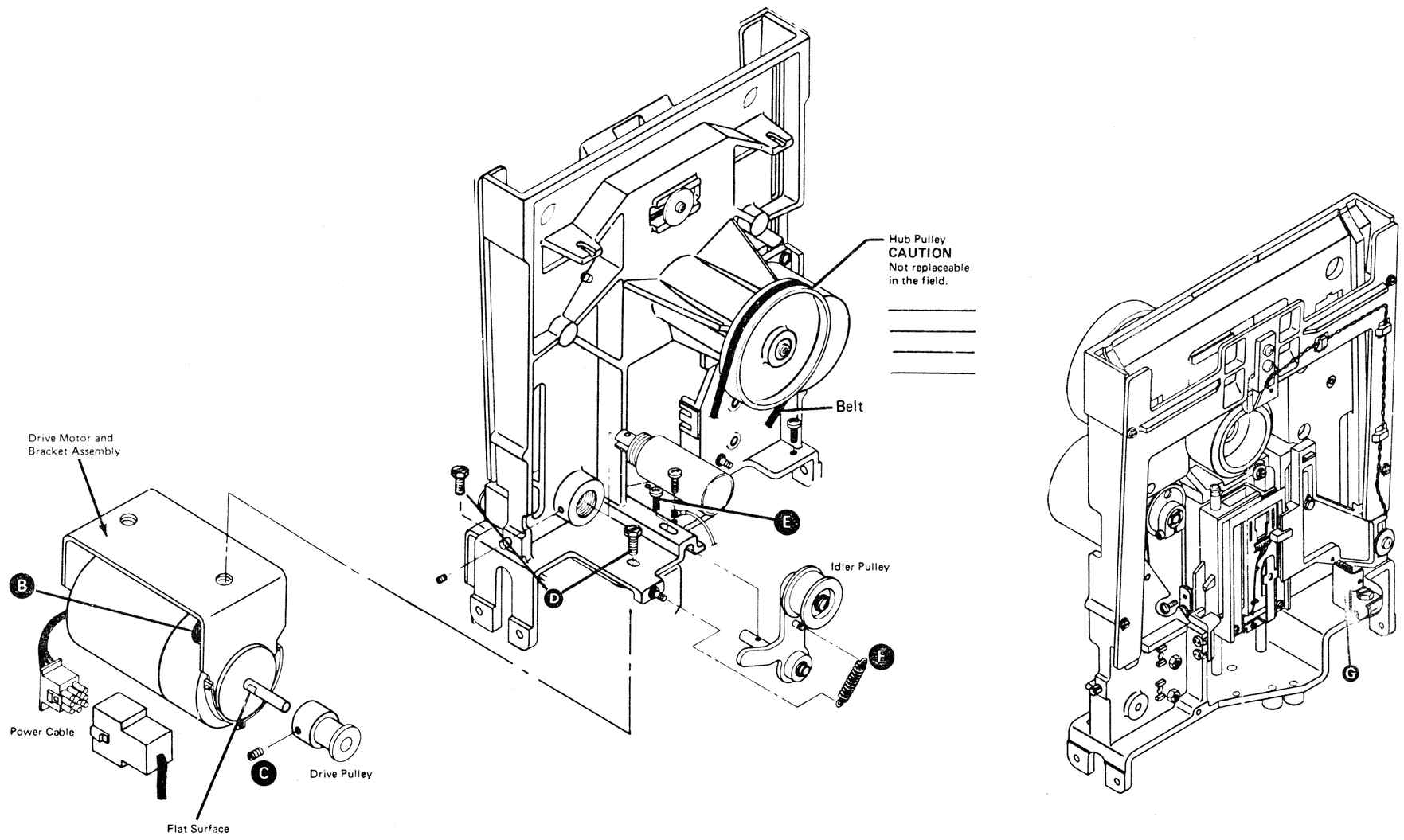

STEPPER DRIVE PARTS

680 Stepper Motor Removal

1. Power off.
2. Remove the diskette drive cover assembly (refer to 420).
3. Disconnect the head cable from the diskette drive control card.
4. Remove the card retainers and the diskette drive control card.
5. Disconnect the cable from location A2 J.
6. Remove the two screws G and the two connector covers.
7. Remove the stepper motor leads H from the cable connector by pushing down on the terminal tabs with a small screwdriver.
8. Remove the wiper assembly F.
9. Loosen the two idler mounting screws E. Push the idler assembly against the spring tension, then tighten the screws.

CAUTION
While performing the following steps, be careful not to damage the drive band.

10. Remove the clamp screw B and the band clamp.
11. Carefully remove the drive band ends from the pulley pin.
12. Measure and record the gap A between the stepper motor pulley and the casting.

Gap is:

13. Loosen the clamp screw C, then remove the stepper motor pulley.
14. Remove the three stepper motor mounting screws D, then remove the motor.

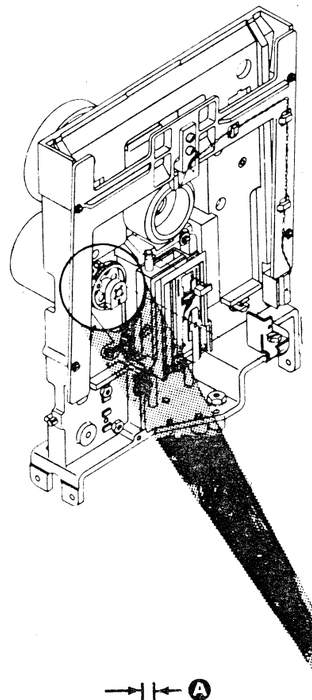

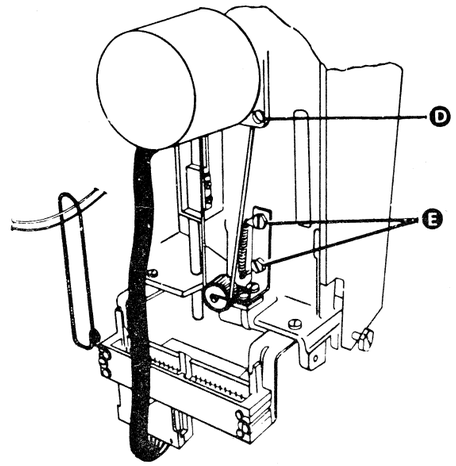

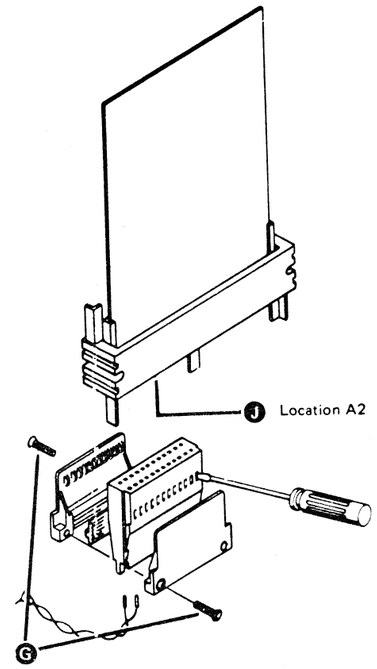

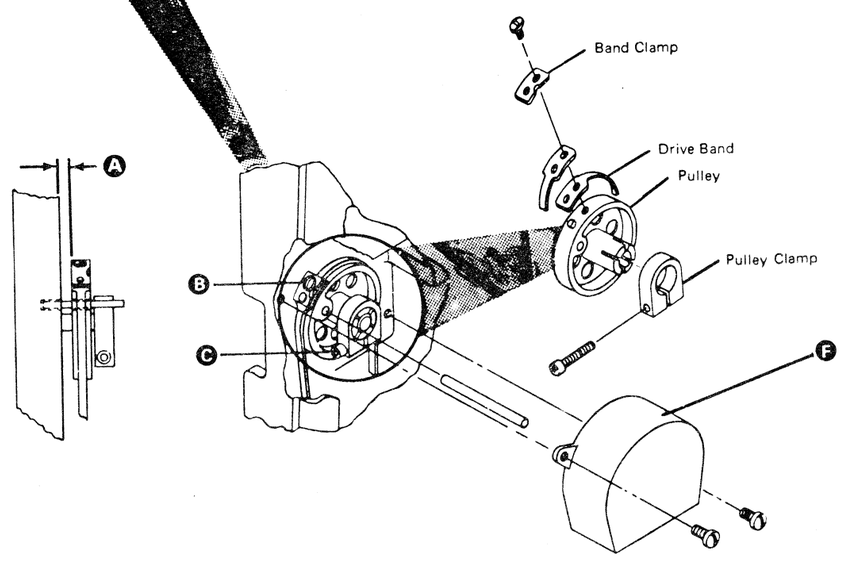

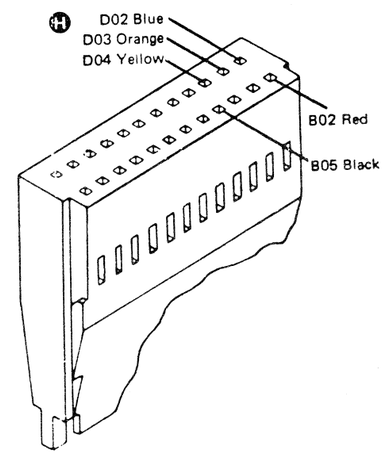

690 Stepper Motor Replacement

1. Install the stepper motor using the three mounting screws G. (Position the motor cable toward the diskette drive control card.)

2. Insert the stepper motor leads M into the cable connector. Ensure that the locking tabs K on the terminals lock in the connector slots.

3. Reinstall the connector covers and two screws L.

4. Connect the cable to location A2 N.

5. Reinstall the stepper motor pulley. (Keep the clamp screw E loose so that the motor shaft can turn inside the pulley.)

6. Carefully reinstall the drive band ends on the pulley pin as shown D. Reinstall the band clamp (with the notch facing away from the stepper motor) and the screw C. (Do not tighten the screw.)

7. Loosen the two mounting screws H and let the spring tension position the idler.

8. Tighten the mounting screws and center the drive band on the idler pulley as shown J.

9. Reinstall the diskette drive control card and the card retainers.

10. Reinstall the head cable on the diskette drive control card.

11. Turn the stepper motor pulley to cylinder 40 and insert a timing pin F.
    Two timing pins are located in the cover assembly (refer to 030).

12. Disconnect the drive motor power cable.

DANGER
Voltage is still present at the socket when the power cable is disconnected and power is on.

13. Power on.

WARNING
To do following procedure correctly, make sure the access lines are not active and cannot be activated by an external source.

14. Install a jumper A from TPA13 (ground) to THP11 (-align access 0).

15. Make the gap B between the pulley and the casting the same size as the gap that was recorded in 680 step 12.

16. Tighten the clamp screw E.

17. Remove the timing pin F.

18. Remove the jumper A.

19. Tighten the band clamp screw C. (Ensure that the drive band is straight.)

20. Power off.

21. Turn the stepper motor pulley by hand and check to see that the drive band is centered J on the idler pulley in all of the head/carriage assembly movement (cylinder 00 to cylinder 76).

22. Is the drive band centered?
    Y N
    – Go to 740, step 4.

23. Go to 480, step 4.

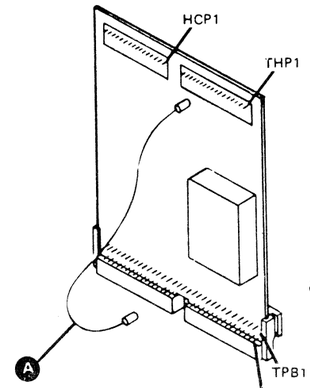

Jumper:

Cylinder 40
THP 11 (-align access 0) --to-- TPA 13 (ground)

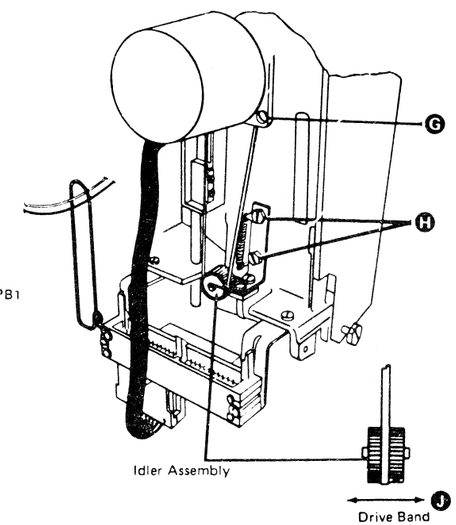

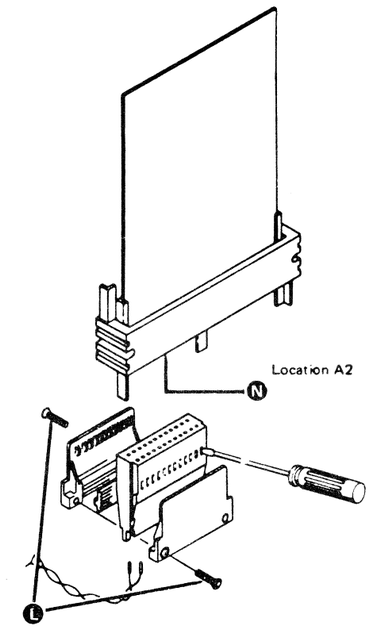

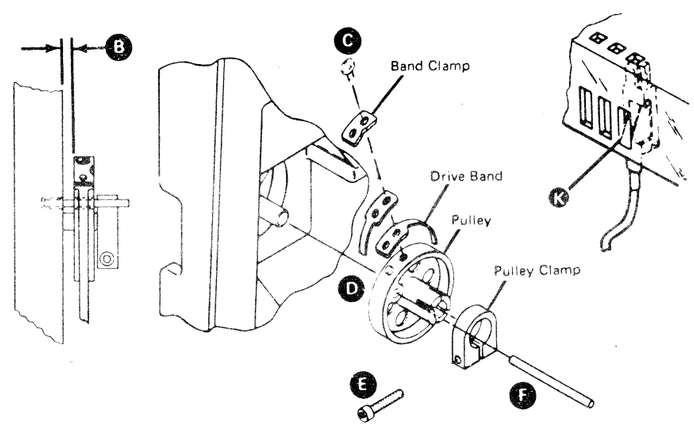

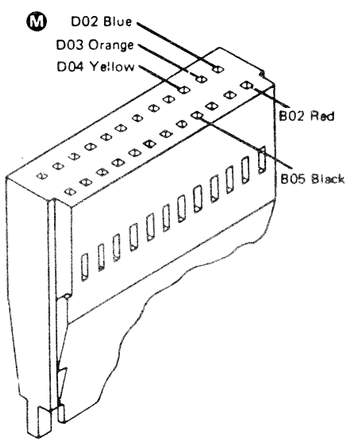

700 Pulley and Clamp Removal

1. Power off.
2. Remove the diskette drive cover assembly (refer to 420).
3. Remove the wiper assembly D.
4. Disconnect the head cable from the diskette drive control card.
5. Remove the card retainers and the diskette drive control card.
6. Loosen the two idler mounting screws E. Push the idler assembly against the spring tension, then tighten the screws.

   CAUTION
   While performing the following steps, be careful not to damage the drive band.

7. Remove the clamp screw B and the band clamp from the pulley.
8. Carefully remove the drive band ends from the pulley pin.
9. Measure and record the gap A between the stepper motor pulley and the casting.

Gap is:

10. Loosen the clamp screw C, then remove the pulley and the clamp.

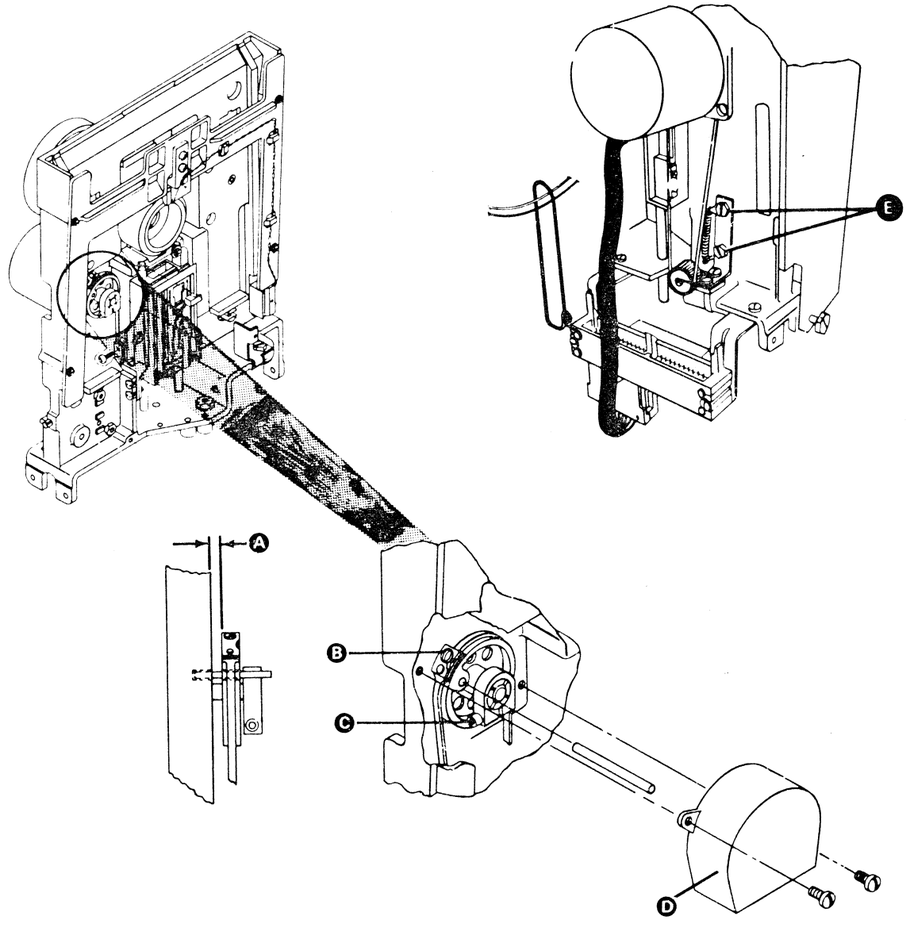

710 Pulley and Clamp Replacement

1. Reinstall the pulley, the clamp, and the clamp screw E. (Keep the screw loose so that the motor shaft can turn inside the pulley.)

2. Carefully reinstall the drive band ends on the pulley pin as shown D. Then reinstall the band clamp (with the notch facing away from the stepper motor) and the screw C. (Do not tighten the screw.)

3. Loosen the two idler mounting screws G and let the spring tension position the idler.

4. Tighten the mounting screws. (Center the drive band on the idler pulley as shown H.)

5. Reinstall the diskette drive control card and the card retainers.

6. Reinstall the head cable on the diskette drive control card.

7. Turn the stepper motor pulley by hand to cylinder 40 and insert a timing pin F. Two timing pins are located in the cover assembly (refer to 030).

8. Disconnect the drive motor power cable.

DANGER
Voltage is still present at the socket when the power cable is disconnected.

9. Power on.

WARNING

To do the following procedure correctly, make sure the access lines are not active and can not be activated by an external source.

10. Install a jumper A from TPA13 (ground) to THP11 (-align access 0).

11. Make the gap B between the pulley and the casting the same as the gap that was recorded in 700 step 9.

12. Tighten the clamp screw E.

13. Remove the timing pin F.

14. Remove the jumper A.

15. Tighten the band clamp screw C. (Ensure that the drive band is straight.)

16. Power off.

17. Turn the stepper motor pulley by hand between cylinders 00 and 76. The drive band should track without movement to the left or right on pulley H.

18. Is the drive band centered?
    Y N
    — Go to 740, step 4.

19. Go to 480, step 4.

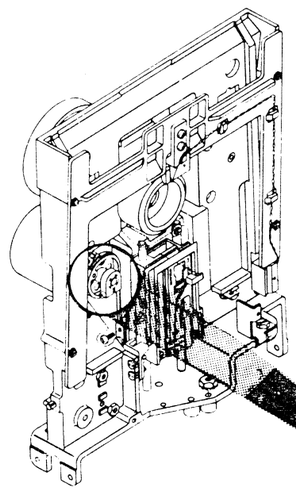

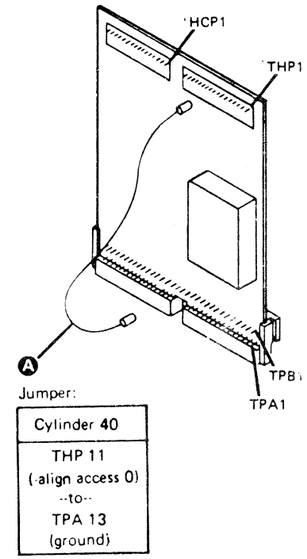

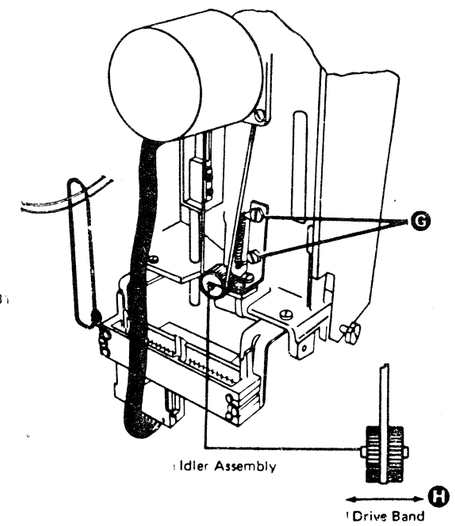

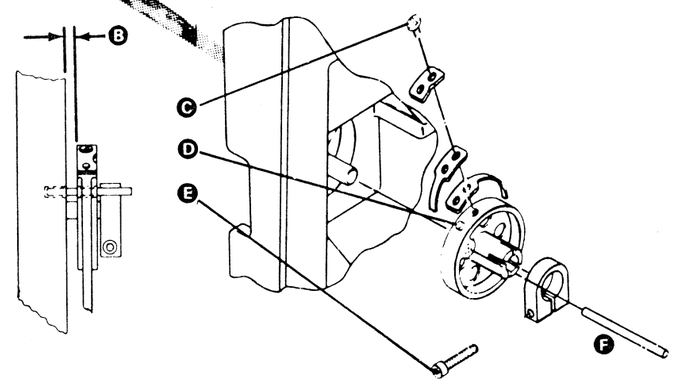

730 Drive Band Service Check

1. Power off.
2. Remove the diskette drive cover assembly (refer to 420).
3. Remove the wiper assembly D.
4. Turn the stepper motor pulley by hand between cylinders 00 and 76. The drive band should track without movement to the left or right on pulley. G
5. Does the band track properly ?
   Y N
   – Go to 740, step 4.
6. Reinstall the wiper assembly D.
7. Reinstall the diskette drive cover assembly (refer to 430).

740 Drive Band Adjustment

1. Power off.
2. Remove the diskette drive cover assembly (refer to 420).
3. Remove the wiper assembly D.
4. Disconnect the head cable from the diskette drive control card.
5. Remove the card retainers and the diskette drive control card.
6. Place the head/carriage assembly to about cylinder 40.
7. Remove the two band clamp screws E and the clamp.
8. Loosen the two idler mounting screws F and let the spring tension position the idler. Tighten the mounting screws.
9. Turn the stepper motor pulley by hand a few times to center the drive band on the idler pulley G.
10. Place the head/carriage assembly to about cylinder 40. Check to see that the band mounting slots A are centered (left to right) over the mounting holes on the carriage pad.
11. Repeat step 10 with the head/carriage assembly at cylinder 76 and cylinder 00.
12. Are the mounting slots centered?
    Y N
    – Loosen the clamp screw C.
    – Loosen the band clamp screw B.
    – Position the stepper motor pulley to center the mounting slots and tighten the clamp screws C and B.
13. Place the head/carriage assembly to about cylinder 40.
14. Reinstall the clamp and the two clamp screws E (do not tighten).
15. Reinstall the diskette drive control card and the card retainers.
16. Connect the head cable to the diskette drive control card.
17. Go to 490, step 4.

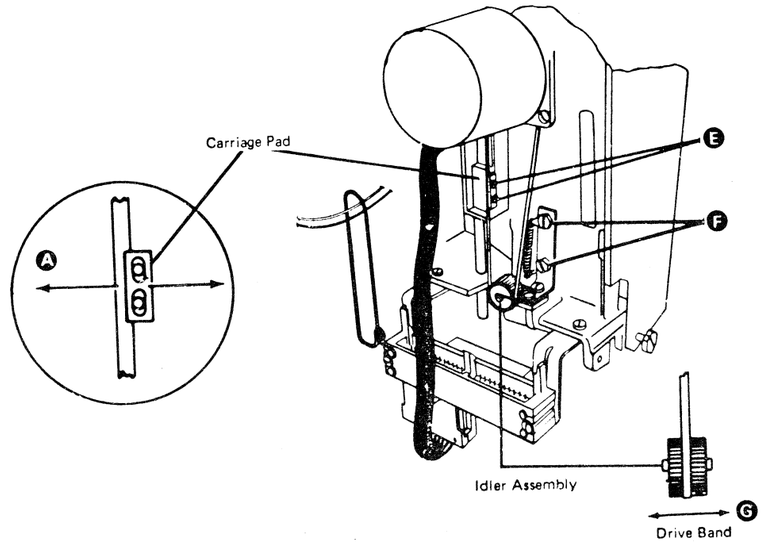

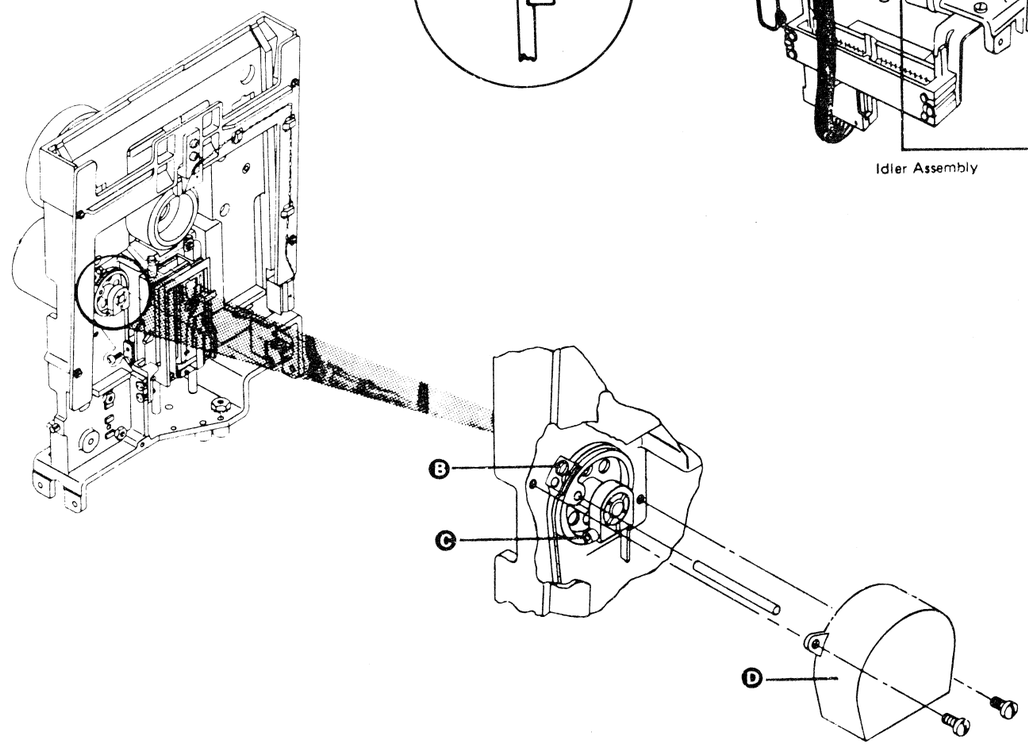

750 Drive Band Removal

1. Power off.
2. Remove the diskette drive cover assembly (refer to 420).
3. Remove the wiper assembly G.
4. Disconnect the head cable from the diskette drive control card.
5. Remove the card retainers and the diskette drive control card.
6. Loosen the two idler mounting screws C. Push the idler assembly D against the spring tension and tighten the mounting screws.
7. Place the head/carriage assembly to about cylinder 40.
8. Remove the two band clamp screws A and the clamp. Then place the head/carriage assembly at the lower limit (cylinder 00).
9. Remove the clamp screw E and the clamp.
10. Remove the drive band ends from the pulley pin. Then remove the band.

760 Drive Band Replacement

1. Place the drive band around the idler assembly.
2. Install the drive band ends on the pulley pin as shown F.
3. Reinstall the band clamp (with the notch facing away from the stepper motor) and the clamp screw E. (Ensure that the drive band is straight.)
4. Go to 740, step 8.

770 Idler Assembly Removal

1. Remove the drive band (refer to 750).
2. Loosen the two mounting screws C.
3. Remove the idler spring B.
4. Remove the mounting screws and the idler assembly D.

780 Idler Assembly Replacement

1. Reinstall the idler assembly D and the two mounting screws C. (Do not tighten the screws.)
2. Reinstall the idler spring B.
3. Push the idler assembly against the spring tension. Then tighten the mounting screws.
4. Go to 760.

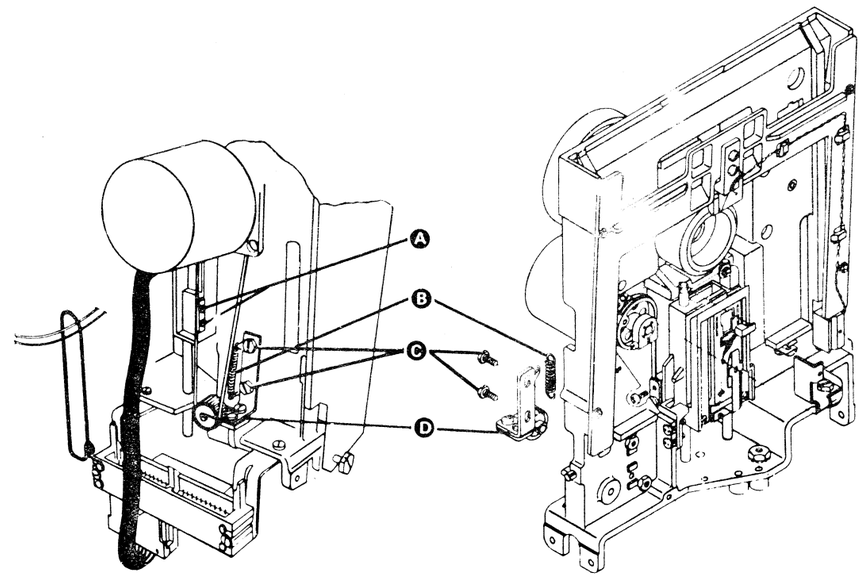

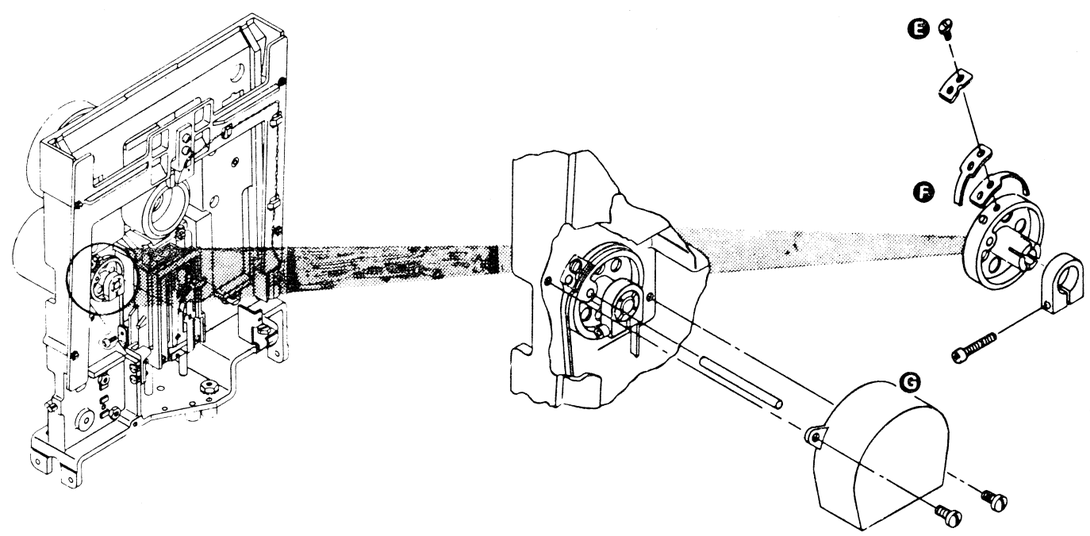

LED AND PTX ASSEMBLIES

790 Diskette Speed Service Check

1. Insert a diskette. (Ensure that the diskette drive cover assembly is closed.)
2. Install a jumper (A) to activate the head load solenoid.
3. Set up an oscilloscope as follows:

   Note: Use a Tektronix 453, 454, or a similar oscilloscope with x10 probes.

Channel A sweep mode	Normal
Channel A level	+
Channel A coupling	DC
Channel A slope	+
Channel A source	Internal
Trigger	Normal
Mode	Channel 1
Channel 1 volts/division	1.0 V/cm
Channel 1 input	DC
Times per division	20 ms
Channel 1 probe to (B)	+Index Test Pin

4. Observe an index pulse width of 1.5 to 3.0 ms (E) occurring every 166.7 ± 4.2 ms (C). Pulse amplitude should be between 2.4 and 4.2 Vdc (D).
5. Remove the jumper (A).
6. Remove the diskette.

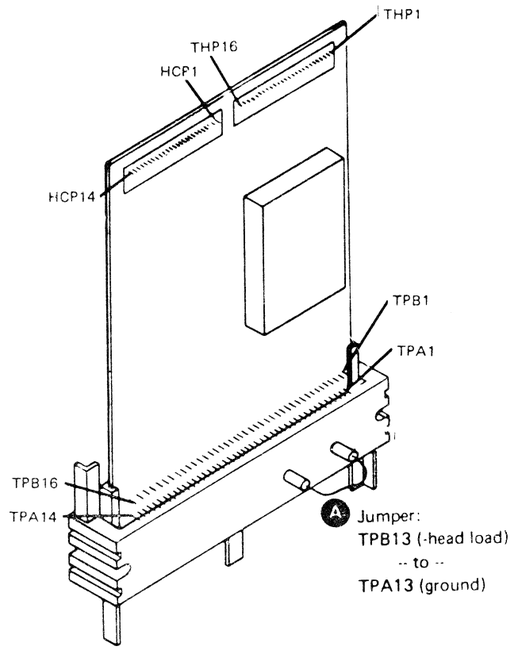

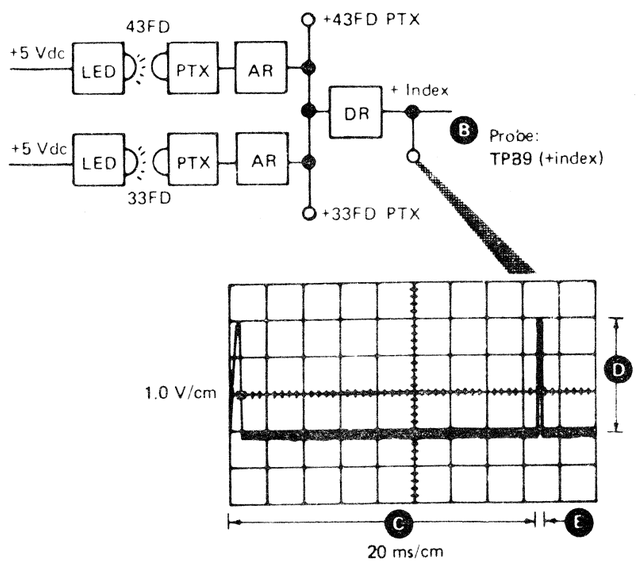

800 LED and PTX Alignment

1. Power off.
2. Remove the diskette drive cover assembly (refer to 420).
3. Loosen the PTX mounting screw (F).
4. Position the PTX assembly against the casting stop (G) (away from the leads); then tighten the mounting screw.
5. Loosen the two LED mounting screws (J).
6. Insert two timing pins (H) through the LED into the PTX assembly and tighten the LED mounting screws.
   Two timing pins are located in the cover assembly (refer to 030).
7. Remove the timing pins.
8. Reinstall the diskette drive cover assembly (refer to 430).
9. Power on.

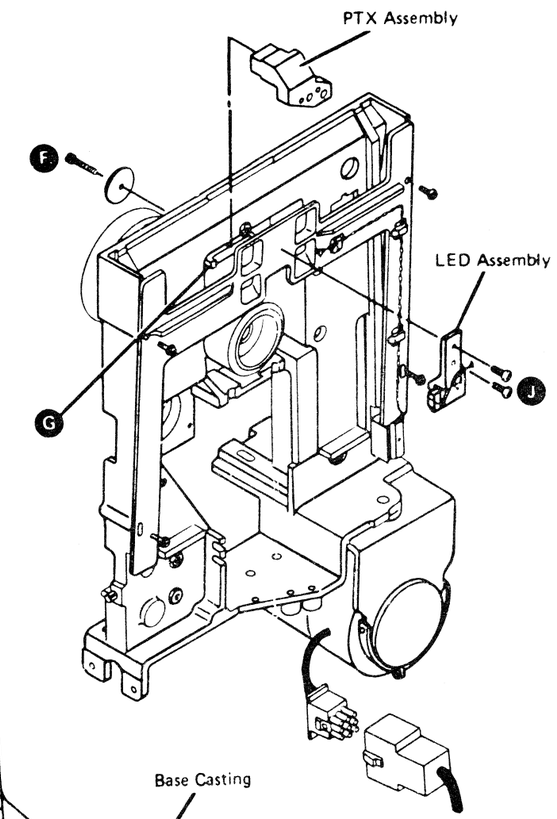

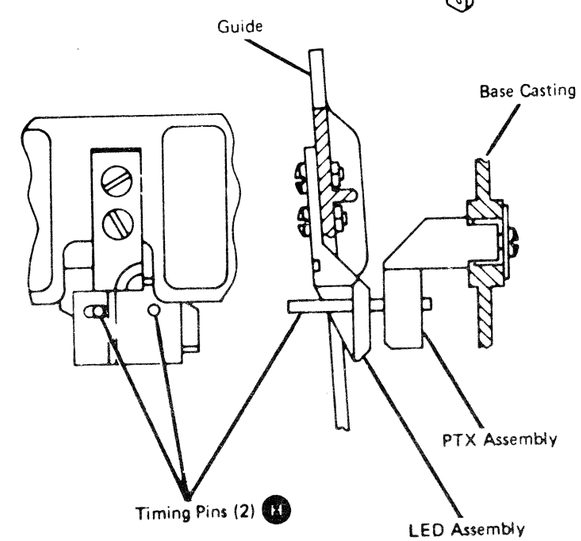

810 LED Output Service Check

1. Connect the negative probe of a multimeter to the ground test pin C on the diskette drive control card.
2. Set the multimeter scale to 5 Vdc and connect the positive probe to the 43FD LED voltage test pin A.
3. Check for a voltage level of 1 Vdc to 2 Vdc.
4. Move the positive probe to the 33FD LED voltage test pin B.
5. Check for a voltage level of 1 Vdc to 2 Vdc.

KEY	SIGNAL	PIN
A	43FD LED VOLTAGE	TPB14
B	33FD LED VOLTAGE	TPA12
C	GROUND	TPA6

Note: See paragraph 890 for test pin locations

820 LED Removal

1. Power off.
2. Remove the diskette drive cover assembly (refer to 420).
3. Disconnect the diskette drive control cable from location A2 L.
4. Remove the two screws K and the connector covers.
5. Remove the two 33FD LED leads M and the two 43FD LED leads J by pushing down on the tabs with a small screwdriver.
6. Remove the LED cable from the three retainers F. (Remember the cable path for the replacement procedure.)
7. Remove the four guide mounting screws E and the guide.
8. Remove the two LED mounting screws G and the nuts H. Then remove the LED assembly.

830 LED Replacement

1. Install the LED assembly, the two mounting screws G, and the nuts H onto the guide. (Do not tighten.)
2. Replace the guide and the four mounting screws E.
3. Follow the cable path through three retainers F and insert two 33FD LED leads (the wrapped pair of leads) M and two 43FD leads J into the diskette drive control cable connector. Ensure that the locking tabs D on the terminals lock in the connector slots.
4. Reinstall the cable connector covers and the two screws K.
5. Plug the cable into location A2 L on the diskette drive control card socket.
6. Go to 800, step 6.

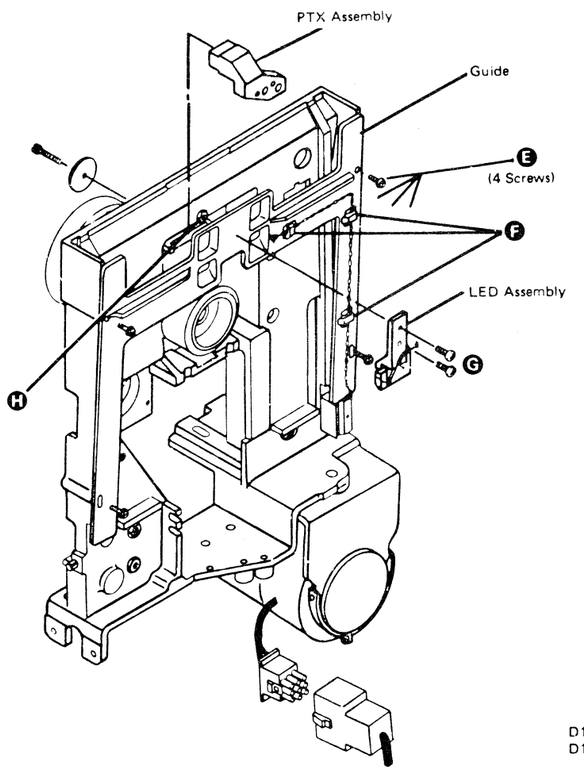

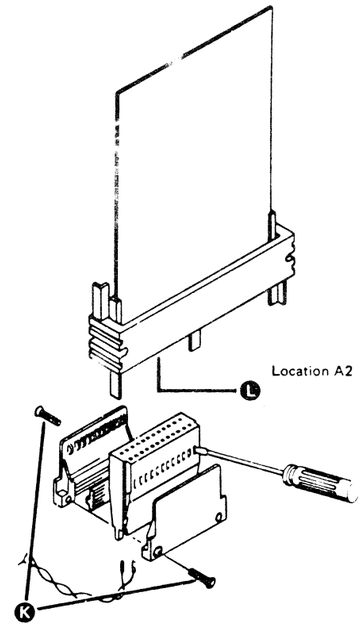

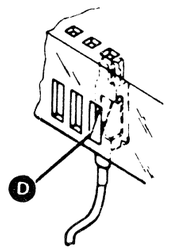

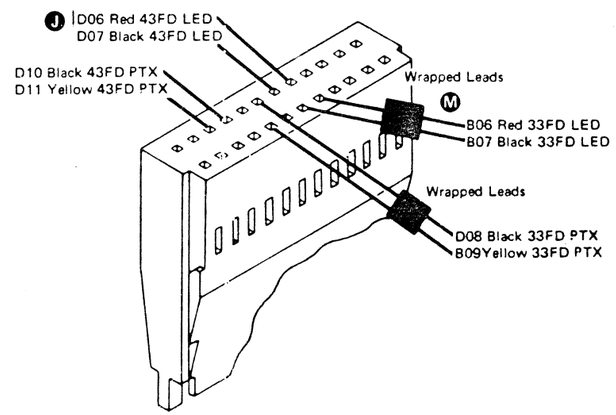

840 PTX Amplifier Service Check

CAUTION
Always perform this service check with a diskette inserted backward (with the label facing the hub pulley), or the LED light will cause a wrong reading and can destroy the PTX.

1. Power off.
2. Disconnect the drive motor power cable.

   DANGER
   Voltage is still present at the socket when the power cable is disconnected.

3. Insert a diskette backwards. (Ensure that the diskette drive cover assembly is closed.)
4. Power on.

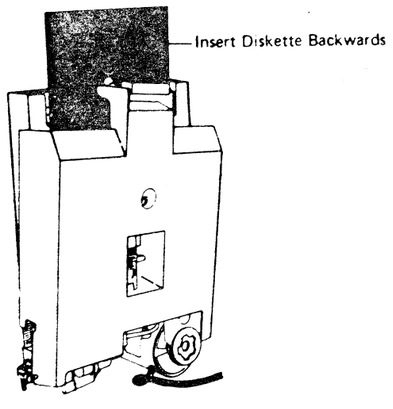

5. Connect the positive probe of a multimeter (15 Vdc scale) to the index test pin D on the diskette drive control card.
6. Connect the negative probe of the multimeter to the ground test pin E.
7. Check the multimeter for a reading of less than 1 Vdc.
8. Install one end of a jumper to the 43FD PTX test pin B.
9. While observing the multimeter, touch the other end of the jumper to the +5 Vdc test pin A several times. The multimeter should read 2.5 Vdc or more when the test pin is touched. (A wrong reading can occur the first time the test pin is touched.)
10. Repeat steps 8 and 9 with the jumper on the 33FD PTX test pin C.
11. Power off.
12. Remove the jumper.
13. Remove the diskette.
14. Connect the drive motor power cable
15. Power on.

KEY	SIGNAL	PIN
A	+5 VDC	TPB15
B	43FD PTX	TPB16
C	33FD PTX	TPA14
D	+INDEX	TPB9
E	GROUND	TPA6

Note: See paragraph 890 for test pin locations

850 PTX Removal

1. Power off.

2. Remove the diskette drive cover assembly (refer to 420).

   CAUTION
   While performing the following steps, be careful not to damage the LED leads.

3. Remove the four guide mounting screws (H) and the guide.

4. Disconnect the diskette drive control cable from location A2 (E).

5. Remove the two screws (C) and the two connector covers.

6. Remove the two 33FD PTX leads (D) and the two 43FD PTX leads (B) by pushing down on the tabs with a small screwdriver.

7. Remove the PTX mounting screw (F) and the washer.

8. Remove the PTX assembly. (Remember the cable path for the replacement procedure.)

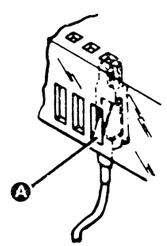

860 PTX Replacement

1. Install the PTX assembly against the casting stop (G) (away from leads,) then reinstall the screw (F) and the washer.

2. Follow the cable path and insert the two 33FD PTX leads (the wrapped pair of leads) (D) and the two 43FD leads (B) into the diskette drive control cable connector. Ensure that the locking tabs (A) on the terminals lock in the connector slots.

3. Reinstall the connector covers and the two screws (C).

4. Plug the connector into location A2 (E) of the diskette drive control card socket.

5. Reinstall the guide and the four mounting screws (H).

6. Go to 800, step 5.

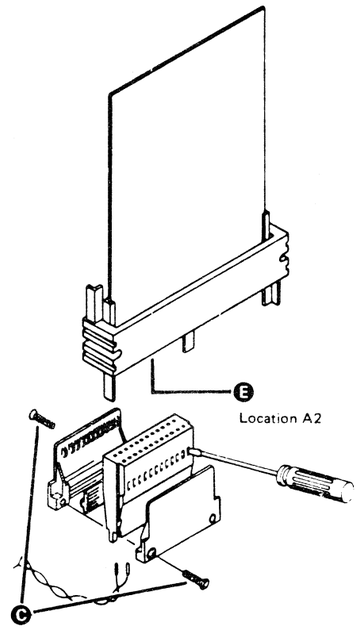

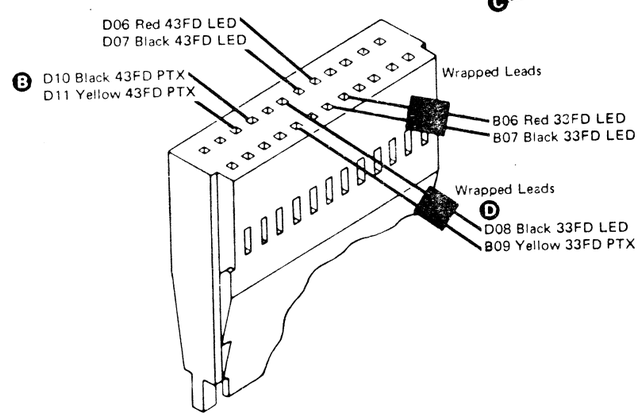

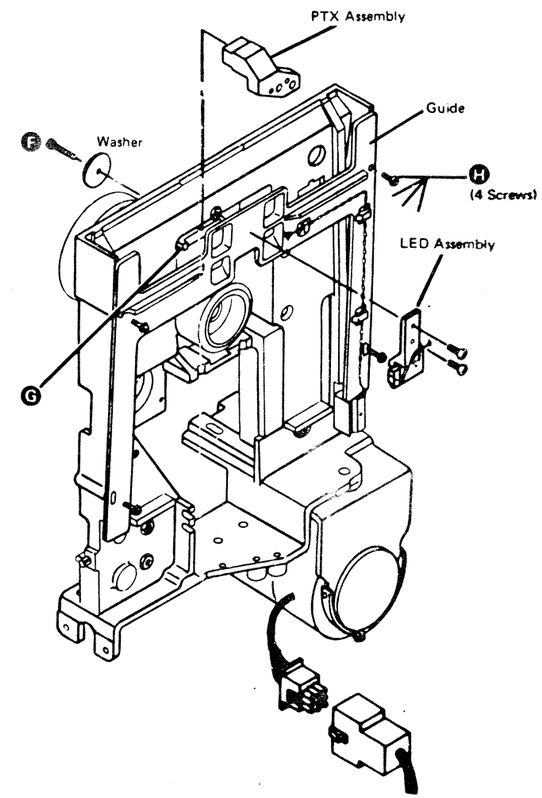

DISKETTE DRIVE CONTROL CARD

870 Control Card Removal

1. Power off.
2. Disconnect the head cable (A) from the diskette drive control card (B)
3. Remove the card retainers (C)
4. Remove the diskette drive control card.

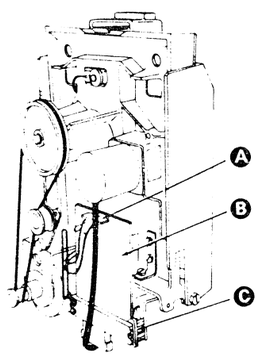

890 Control Card Test Pins

OLD card version P/N 8528195

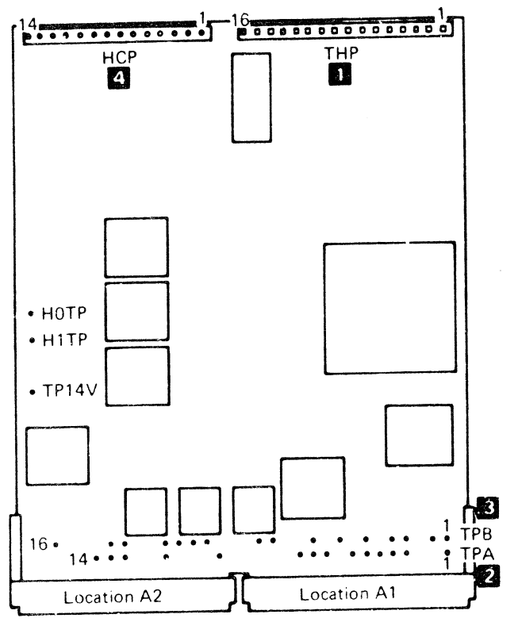

880 Control Card Replacement

1. Reinstall the diskette drive control card (B). Ensure that the card is seated in the socket.
2. Reinstall the card retainers (C).
3. Connect the head cable (A) to the diskette drive control card.
4. Power on.

1

THP1	+Diskette Loaded
THP2	+Predrive MC-3
THP3	+Predrive MC-2
THP4	+Predrive MC-1
THP5	+Predrive MC-0
THP6	+43FD Index
THP7	+33FD Index
THP8	Diff Read A
THP9	Diff Read B
THP10	-High Gain
THP11	-Align Access 0
THP12	-High Current
THP13	Preamp TP1
THP14	Preamp TP2
THP15	-High Gain A
THP16	-High Gain B

2

TPA1	+Write Data
TPA2	+Erase Gate
TPA3	+Write Gate
TPA4	+Inner Tracks
TPA5	+Select Head 1
TPA6	Ground
TPA7	+Erase Current Sense
TPA8	+24 Vdc
TPA9	-5 Vdc
TPA10	MC-1
TPA11	MC Common
TPA12	33FD LED Voltage
TPA13	Ground
TPA14	33FD PTX

3

TPB1	+Access 0
TPB2	+Access 1
TPB3	+Access 2
TPB4	+Access 3
TPB5	+File Data
TPB6	+Diskette Sense
TPB7	+Head Engage
TPB8	+Switch Filter
TPB9	+Index
TPB10	MC-3
TPB11	MC-0
TPB12	MC-2
TPB13	-Head Load
TPB14	43FD LED Voltage
TPB15	+5 Vdc
TPB16	43FD PTX

4

For details refer to '910 Control Card Head Cable Pins'.

890 Control Card Test Pins (continued)

NEW card version P/N 4178065

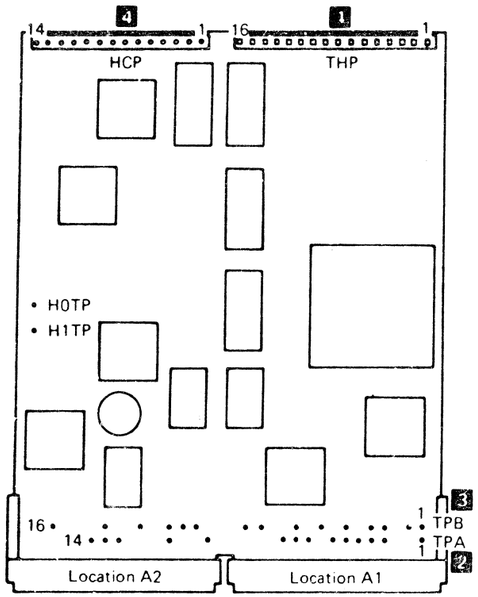

1

THP1	+Diskette Loaded
THP2	-Hd Ld Osc
THP3	+14 Vdc
THP4	Ground
THP5	Ground
THP6	+43FD Index
THP7	+33FD Index
THP8	Diff Read A
THP9	Diff Read B
THP10	-High Gain
THP11	-Align Access 0
THP12	-High Current
THP13	Preamp TP1
THP14	Preamp TP2
THP15	-High Gain A
THP16	-High Gain B

2

TPA1	+Write Data
TPA2	+Erase Gate
TPA3	+Write Gate
TPA4	+Inner Tracks
TPA5	+Select Head 1
TPA6	Ground
TPA7	+current Enabled
TPA8	+24 Vdc
TPA9	-5 Vdc
TPA10	MC-1
TPA11	+Hd Load Solenoid
TPA12	33FD LED Voltage
TPA13	Ground
TPA14	33FD PTX

3

TPB1	+Access 0
TPB2	+Access 1
TPB3	+Access 2
TPB4	+Access 3
TPB5	+File Data
TPB6	+Diskette Sense
TPB7	+Head Engage
TPB8	+Switch Filter
TPB9	+Index
TPB10	MC-3
TPB11	MC-0
TPB12	MC-2
TPB13	-Head Load
TPB14	43FD LED Voltage
TPB15	+5 Vdc
TPB16	43FD PTX

4

For details refer to '910 Control Card Head Cable Pins'.

900 Control Card Socket and Connector Pins

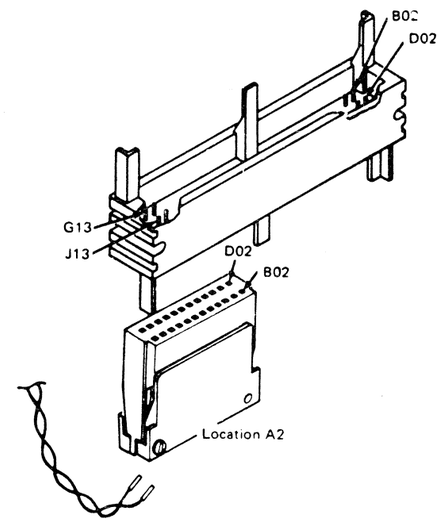

910 Control Card Head Cable Pins

4

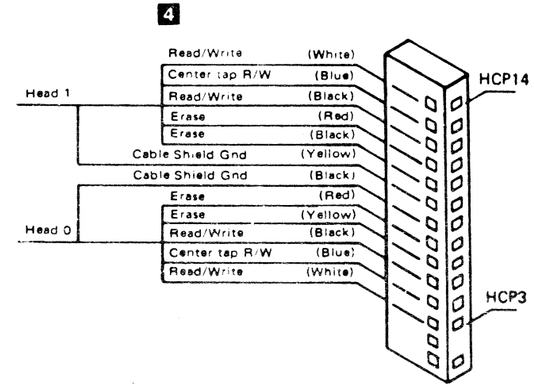

920 Control Card Interface Description

Note: That two different cards (old and new card version) are in use

The following is a description of the interface lines at connector A1.

Access Lines 0 through 3: Two or four access pulses move the read/write heads from one cylinder to the next cylinder. Notice in the chart that the same pair of access pulses are repeated every four cylinders.

Cylinder Location	In → 0	1	2	3	4	5 --40--	← Out 74	75	76
Access 0	1	0	0	1	1	0	1	0	1	1
Access1	1	1	0	0	1	1	1	0	0	1
Access2	0	1	1	0	0	1	0	1	0	0
Access3	0	0	1	1	0	0	0	1	1	0

The four access pulses are sequenced to move the heads in (toward the drive hub) or out (away from the drive hub).

+Write Data: For each change of the write data signal, the current switches in the read/write head. This process records the data on the diskette surfaces. (Refer to 170.)

+Write Gate: Write gate activates the write circuits and deactivates the read circuits for a write operation. (Refer to 170.)

+Erase Gate: Erase gate activates the erase circuits for a write operation. (Refer to 170.)

+Erase Current Sense: (Old card version) When this line is active, the erase circuits are working OK.

+Current Enabled: (New card version) This line is active when either the write circuits or the erase circuits are active.

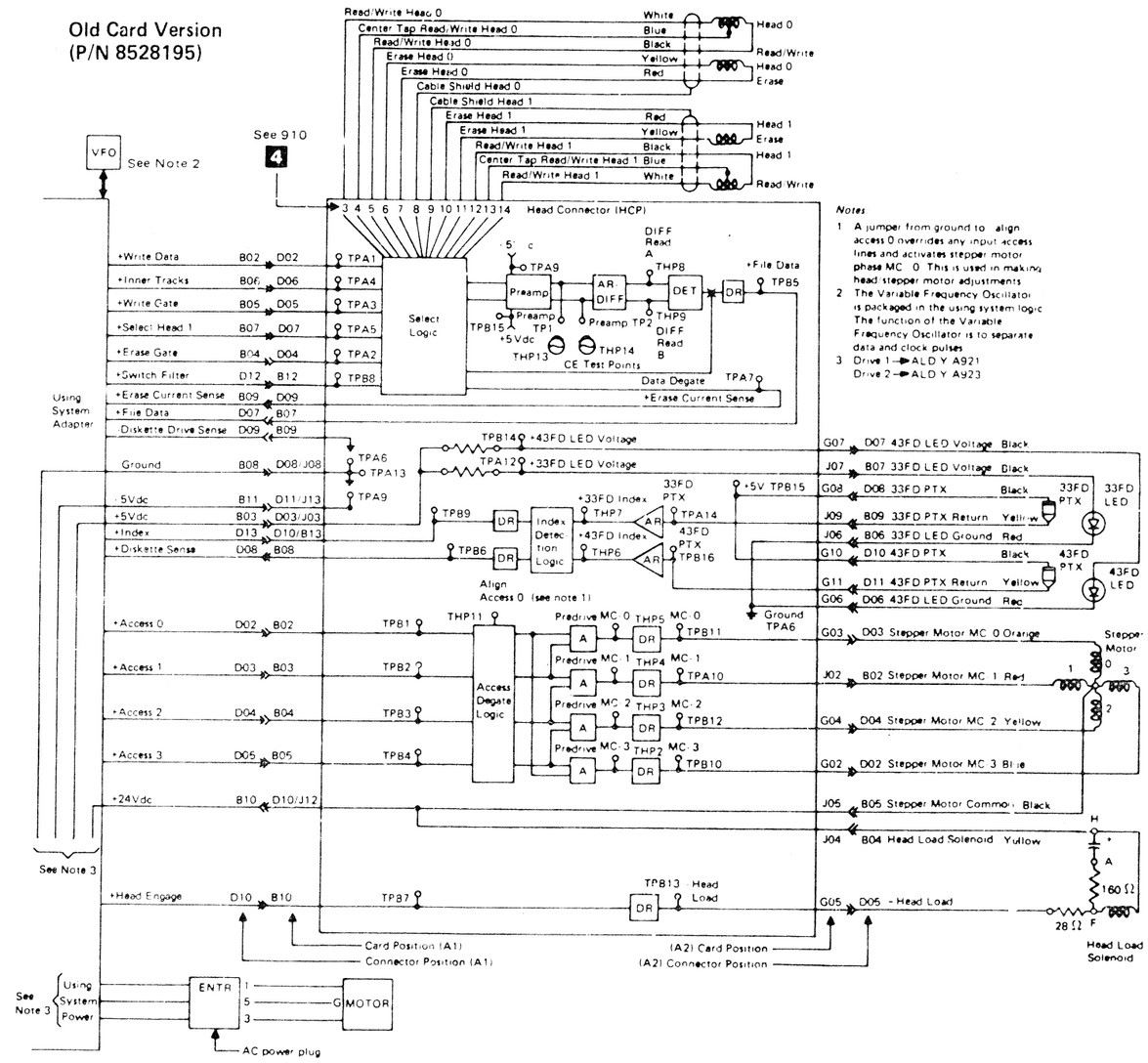

920 Control Card Interface Description (continued)

+Select Head 1: When active, this line selects head 1. (Refer to 170.)

+Head Engage: When active, this line loads the read/write heads.

+Index: This line indicates the beginning of a track. This 1.5 to 3.0 ms pulse occurs every 166.7 ms.

+File Data: File data is a series of clock and data pulses that represent the data read from the diskette surface.

+Diskette Sense: When active, this line indicates that a diskette 2 or 2D is being used. This line is not activated by a diskette 1.

-Diskette Drive Sense: This line is normally minus indicating that the diskette drive installed uses type 2 or 2D diskettes.

+Inner Tracks: On a write operation, this line is used to reduce the amount of recording current beyond the middle cylinders. On a read operation, this line is used to compensate for bit shifting beyond the middle cylinders.

+Switch Filter: This line is used with the inner tracks line to further compensate for bit shifting beyond cylinder 60 for MFM encoding. This line is not used on a write operation.

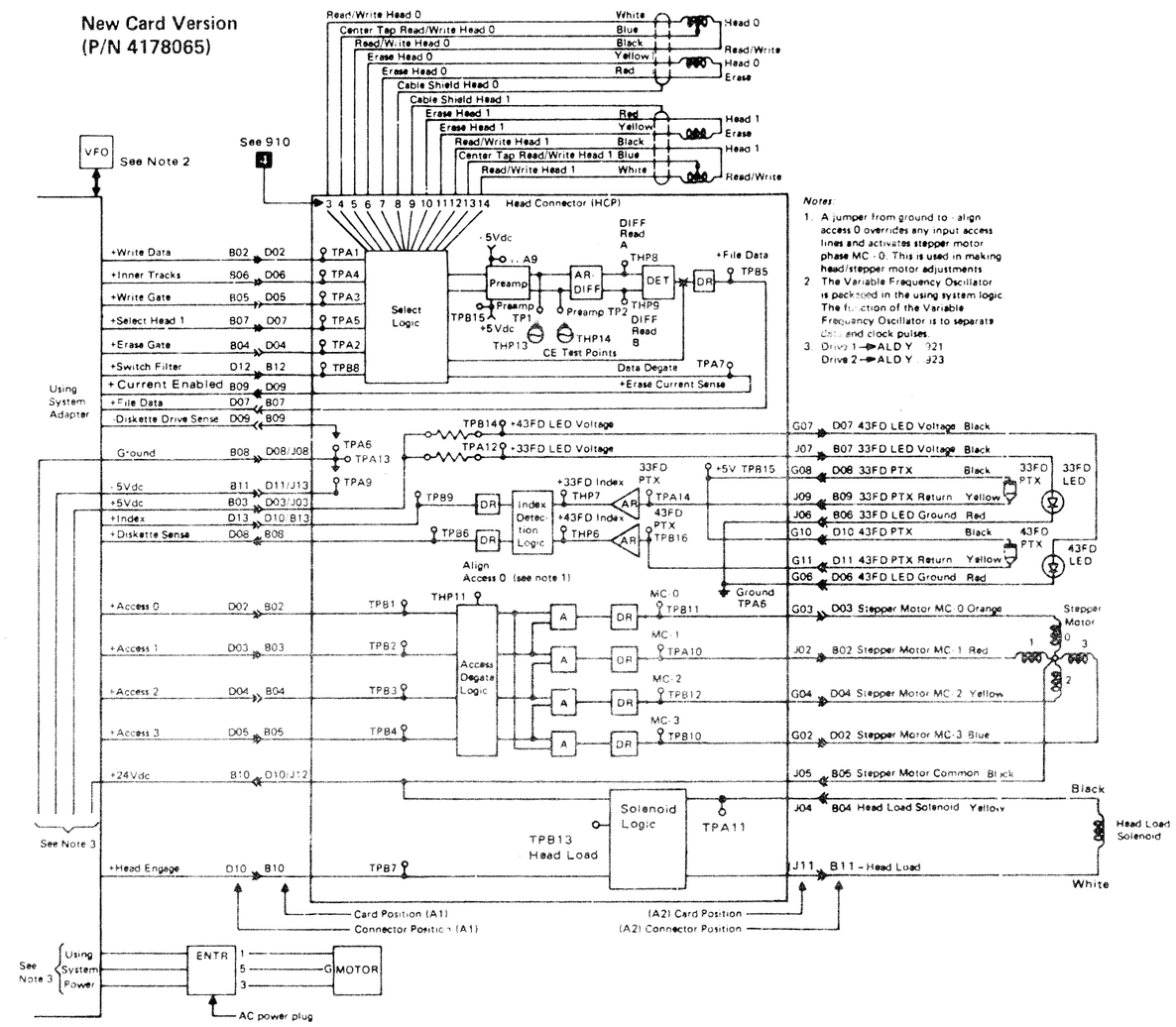

Notes:

1. A jumper from ground to align access 0 overrides any input access lines and activates stepper motor phase MC-0. This is used in making head/stepper motor adjustments.
2. The Variable Frequency Oscillator is packaged in the using system logic. The function of the Variable Frequency Oscillator is to separate data and clock pulses.
3. Drive 1 → ALDY 921
   Drive 2 → ALDY 923

930 Signal Routing

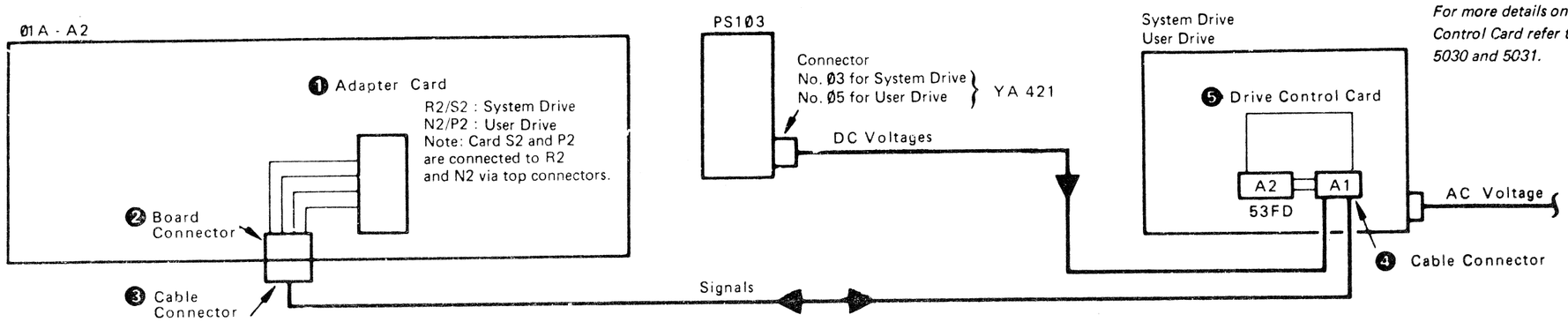

For more details on the Drive Control Card refer to pages 5030 and 5031.

Direction of Signal To	From Drive	Two Card Adapter Signal Name	One Card Adapter Signal Name	❶ Adapter Card (S) Two Card Version	One Card Version	❷ Board Connector User Drive (Drive 2)	System Drive (Drive 1)	Cable Connector ❸ Board Side Drive 1 : ZF Drive 2 : ZE	❹ Drive Side	❺ Drive Control Card
•		+ Access Ø	+ Access Ø	J 1Ø	J 1Ø	M6BØ2	Q6AØ2	DØ2	DØ2	BØ2
•		+ Access 1	+ Access 1	P Ø4	P Ø4	M6CØ2	Q6BØ2	DØ3	DØ3	BØ3
•		+ Access 2	+ Access 2	J 13	J 13	M6DØ2	Q6CØ2	DØ4	DØ4	BØ4
•		+ Access 3	+ Access 3	P Ø7	P Ø7	M6EØ2	Q6DØ2	DØ5	DØ5	BØ5
•		+ Write Data	– Write Data 1	J 11	J 11	M6BØ4	Q6AØ4	BØ2	BØ2	DØ2
•		+ Write Gate	+ Write Gate	J 12	J 12	M6EØ4	Q6DØ4	BØ5	BØ5	DØ5
•		+ Erate Gate	+ Erase Gate	S Ø8	S Ø8	M6DØ4	Q6CØ4	BØ4	BØ4	DØ4
	•	+ Erase Current Sense	+ Erase Current Sense	U 12	U 12	N6DØ4	R6CØ4	BØ9	BØ9	DØ9
•		+ Select Head	+ Select Head	M 1Ø	M 1Ø	N6BØ4	R6AØ4	BØ7	BØ7	DØ7
•		+ Head Engage	+ Head Engage	U Ø4	U Ø4	N6EØ2	R6DØ2	D1Ø	D1Ø	B1Ø
	•	+ Index	+ Index 1	B Ø9	B Ø9	P6CØ2	S6BØ2	D13	D13	B13
	•	+ File Data	+ File Data 1	B Ø8	B Ø8	N6BØ2	R6AØ2	DØ7	DØ7	BØ7
	•	+ Diskette Sense	+ Diskette Sense	B Ø4	B Ø4	N6CØ4	R6BØ4	BØ8	DØ8	BØ8
	•	+ Unused	– Diskette Drive Sense	–	U Ø9	N6DØ2	R6CØ2	DØ9	DØ9	BØ9
•		+ Inner Tracks	+ Inner Tracks	G 1Ø	G 1Ø	N6AØ4	Q6EØ4	BØ6	BØ6	DØ6
•		+ Switch Filter	+ Switch Filter	G 13	G 13	P6DØ2	S6AØ2	D12	D12	B12

DC Voltages PS1Ø3/1Ø4	Ground	DØ8	BØ8	DØ8
	+ 24V	–	B1Ø	D1Ø
	+ 5V	–	BØ3	DØ3
	– 5V	–	B11	D11

940 CDF Removal and Replacement

If you are told by the MAP to replace the complete disk drive unit perform the following steps:

1. Turn power off.
2. Remove diskette from drive to be replaced.
3. Remove connector retainer. ❶
4. Disconnect DC cable (position A1) from the diskette drive control card. ❷
5. Disconnect AC cable: ❸
6. Unscrew and remove nut and washer of lower mounting pin. ❹
7. Loosen the four screws holding the upper two shock mounts. ❺
8. Hold the dirve unit and remove the four screws. Remove the whole unit together with the two upper shock mounts.
9. Install new drive unit. Perform the above steps in the reverse order.

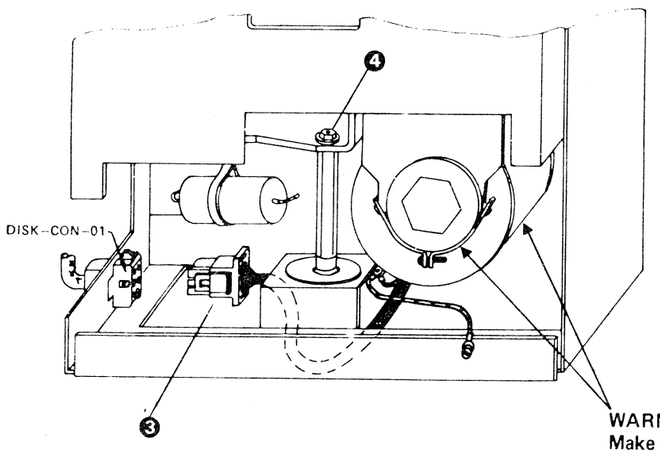

WARNING:
Make sure that the motor holding clamps do not touch the motor housing.

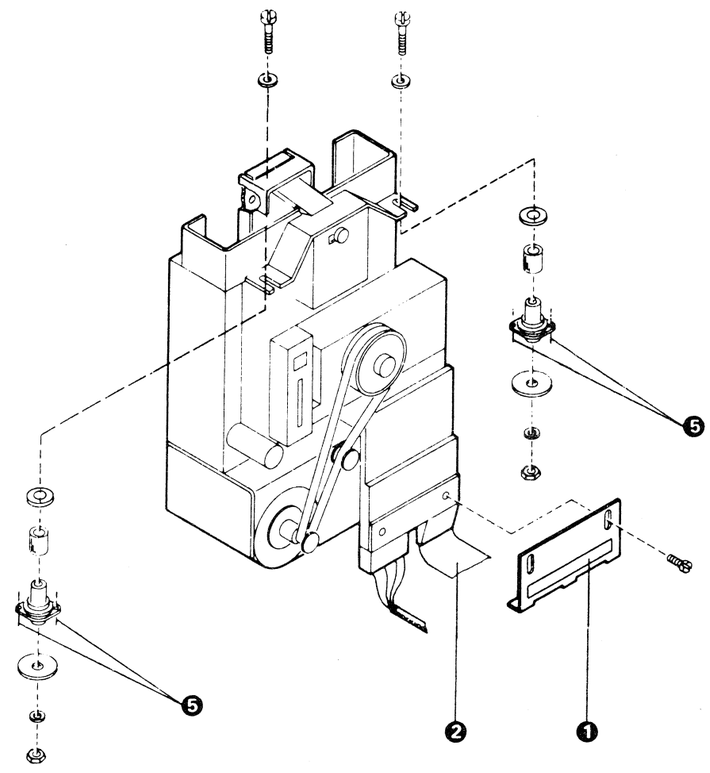

Glossary and Legend

Glossary

AR (amplifier): An electronic circuit that increases the amplitude of a signal for distribution.

DET (detector): An electronic curcuit that detects a carried signal and converts it to signal pulse.

AR DIF (differentiator-amplitude): An electronic circuit whose output signal is a function of the time rate of change of the input signal.

Diskette 1: A diskette used for storing data on only one surface.

Diskete 2: A diskette used for storing data on both surfaces.

Diskette 2D: A diskette used for storing data on both surfaces with twice the bit density used on a diskette 2.

DR (driver): An electronic circuit that increases the energy of a signal to a sufficient level to drive a predetermined load.

LED (ligth emitting diode): An electronic part used as a source of light.

PTX (phototrasistor): An electronic part used to sense the ligth of an LED.

Preamplifier: See amplifier.

VFO (variable frequency oscillator): An electronic circuit used to synchronize the read and write circuits in FM and MFM recording.

Legend

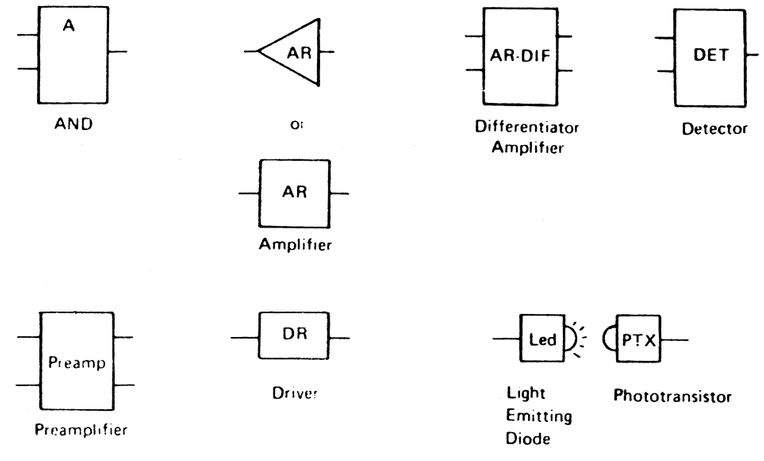

I/O Diskette Drive Tests

Test Handling - Actions

Prerequisites

- Power complete
- IML complete
- Diagnostic diskette inserted in system drive
- Diskette to be tested inserted in I/O device

Caution: Some devices (for example 3741) are capable to flag up to two defective cylinders during initialization and assign alternative cylinders.
The I/O diskette drive tests do not support testing with diskettes which do have alternative tracks assigned. The tests with selection 2, 3, 6, 7, and 8 will fail. See 'How to Check for Allocated Cylinders' under test selection 7.

How to Select the Tests

1. Call M/S Program Selection. [A]
2. Key in selection for 'CENTRAL COMPLEX', press ENTER. [B]
3. Select I/O Diskette Drive Maintenance Program. [C]
4. Key in the appropriate test selection.

Handling of Tests (Selection 1 to 8)

After entering the selection ID (1-9) press ENTER to start the test. The selection menu display will not change for selection 1 to 5 but additional information is displayed. [D]

To stop a running test, except test 8, press ENTER again. By pressing ENTER a third time a stopped test can be continued or restarted and so on.

To return to the test selection menu type in an 'R' and press ENTER, select new test.

How to Terminate the Test

If you want to run any test other than a diskette drive test return to M/S PROGRAM SELECTION. Select new test, otherwise perform the following steps:

1. Press ENTER to stop the test
2. Insert control diskette
3. Perform re-IML
4. Return machine

4331

STM

Test Handling - Results

Screen Displays

[A] 'IBM MAINTENANCE AND SERVICE PROGRAM SELECTION

[B] 'CENTRAL COMPLEX TEST SELECTION'

[C]
```
+-------------------------------------------------------+
|    I/O DISKETTE DRIVE MAINTENANCE PROGRAM             |
|                                                       |
|  1 = ADAPTER TEST          2 = ACCESS TEST            |
|  3 = READ TEST             4 = WRITE TEST             |
|  5 = LOOP FUNCTION         6 = MANUAL SELECTION       |
|  7 = RECORD DISPLAY        8 = DISKETTE SURFACE       |
|  9 = COPY AND FORMATTING                              |
|                                                       |
|  SELECTION:                                           |
|                                                       |
|                            DATA:        ADDR:         |
|                                                       |
|                            ANSWER                     |
+-------------------------------------------------------+
```

[D]
```
                                                  (A)
+-------------------------------------------------------+
|     I/O DISKETTE DRIVE MAINTENANCE PROGRAM            |
|                                        1 DISK TYPE    |
|                                                       |
| 1 = ADAPTER TEST          2 = ACCESS TEST             |
| 3 = READ TEST4            4 = WRITE TEST              |
| 5 = LOOP FUNCTION         6 = MANUAL SECTION          |
| 7 = RECORD DISPLAY        8 = DISKETTE SURFACE        |
| 9 = COPY AND FORMATTING                               |
|                                                       |
|                    END OF TEST                        |
| SELECTION:                                            |
|                          ACCESS TEST  <---(B)         |
|                                                       |
|          TIMER: OFF      DATA:        ADDR:           |
|                                                       |
|                           STOPPED     <---(C)         |
+-------------------------------------------------------+
```

(A) For selection 2 to 5 and 6 the disk type used is displayed here.

Diskette 1:	One-sided diskette with 128, 256, or 512 bytes per record.
Diskette 2:	Two-sided diskette with 256 bytes per record.
Diskette 2D:	Two-sided, double density diskette with 256, 512 or 1024 per record.

(B) This field displays the name of the test currently executed, or a message indicating how to continue.

(C) Status field

I/O Diskette Drive Tests (continued)

Test Handling - Actions

Test Selection 1

By entering a 1 in the selection field, the adapter test is selected. Its purpose is to:

1. Reset the adapter and test for correct results.
2. Test if the drive is ready.
3. Test if the channel pointer is operational.
4. Test both adapter buffers with various data patterns.
5. Test if the access drive electronic switches properly.
6. Execute a head switching test.

Test Selection 2

By entering a 2 the 'access test' is invoked. Its purpose is to execute a:

1. Seek cylinder 0 and test if cylinder 00
2. Seek cylinder 76 and test if cylinder 76
3. Seek cylinder 1 and test if cylinder 01
4. Seek cylinder 75 and test of cylinder 75
5. To ... and so forth until all cylinders have been accessed.

Test Selection 3

By entering a 3 the 'read test' is invoked. Its function is the same as the access test, but in addition a 'read record' operation is performed after each access cycle.

Test Selection 4

By entering a 4 the 'write test' is invoked. Its purpose is to:

1. Execute a 'seek cylinder 0' and test of cylinder 0
2. Write various data pattern to record 3, cylinder 0, head 0
3. Read data written back into storage and compare write data with read data

Test Selection 5

By entering a 5 the 'loop function' is invoked. This function runs the before described tests (selection 1, 2, 3, and 4) as one test in the sequence of their selection number. At the end of test 4 the test string is repeated starting with test one again.

Test Selection 6

By entering a 6 in the selection field, the Manual Selection Menu is displayed. [E]

Two subselections are possible by entering :
1 for ACCESS or
2 for READ

Press ENTER.

Access

After selection of ACCESS the input field for the FROM and TO CYLINDER is displayed.

SELECT FROM-CYLINDER #: CC
SELECT TO-CYLINDER #: CC

Read

After selection of READ the input field for record number is displayed.

SELECT RECORD #: CCHHRR

CC — Cylinder number
HH — Head number
RR — Record number (1 to 26)

These parameters have to be entered in decimal notation. Otherwise the message 'INVALID' is displayed.

Test Handling - Results

```
E +-------------------------------------------------------+
  |                                        1 DISK TYPE    |
  |     MANUAL SELECTION MENU FOR I/O DISKETTE            |
  |                                                       |
  | ACCESS = 1                                            |
  | READ   = 2          ***                               B
  | +--------------+     |                               |
  | +--------------+     A                               |
  |        |                                              |
  |        C                                              |
  |                                                       |
  | SELECTION: 2                                          |
  |          TIMER: OFF      DATA:      ADDR:             |
  |                                                       |
  |                          ANSWER                       |
  +-------------------------------------------------------+
```

(A) Three asterisks are displayed behind the selected test.

(B) Disk type used: For explanation see (A) on page 5100.

(C) Data input field is displayed after test selection.

I/O Diskette Drive Tests (continued)

Test Handling - Actions

Test Selection 6 (continued)

For the head parameter any decimal number from one and higher is accepted as head one selection.

The ACCESS and READ routines we are running in a continuous loop. The loop can be stopped and/or started by pressing the ENTER key.

By stopping the test and entering an 'S' behind SELECTION the cursor moves to the parameter field thus allowing to alter the parameters. Press ENTER to continue the test with new parameters. To switch from ACCESS to READ or vice versa return to Main Selection Menue by entering 'R' behind SELECTION.

Test Selection 7

By entering a 7 as selection, the 'record display' picture is selected.

Enter the record number in the format 'cylinder-head-record' in decimal notation, press 'ENTER'. This causes the selected record to be displayed [F].

Up to 256 bytes can be displayed in a frame. If a 512 or 1024 byte record has to be displayed the display consists of two or four frames. When the first frame is displayed and the record exceeds 256 bytes the word 'AGAIN' is displayed behind 'Selection', press 'ENTER' to display next frame of record.

How to Check for Allocated Cylinders

Display record 5 enter for CCHHRR = 000005 to check for defective (allocated) cylinders. Check data bytes 7, 8, and 9 for X'404040'. If value differs, alternate tracks are assigned.

Test Handling - Results

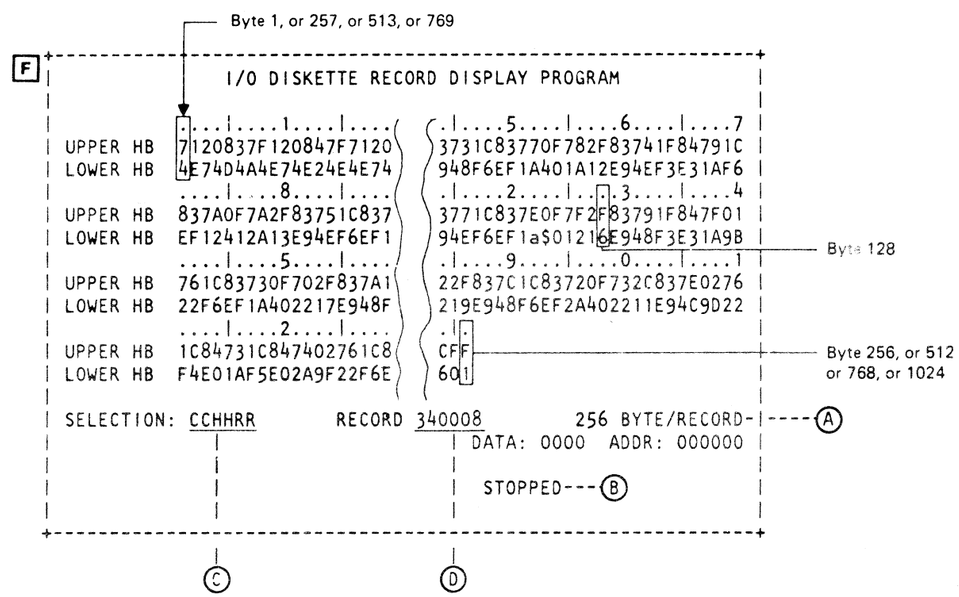

(A) Message field, giving the size of the record for example:

256 BYTES/RECORD

on information how to proceed.

ENTER TO GO TO SELECTION

This means press ENTER to return to the main selection picture. In this case the displayed record information is lost.

(B) Status field, the message STOPPED, RUNNING, INVALID, or ERROR can appear. In addition to 'ERROR' a reference code is shown.

(C) Enter field for the record to be displayed.

(D) This field shows the number of the displayed record.

I/O Diskette Drive Tests (continued)

Test Handling - Actions

Test Selection 8

By entering 8 the 'Diskette Surface Analysis' test is invoked. G

This test checks the diskette for defective tracks. Data of the first detected error on a track is displayed. Up to eight errors per line or a total of 32 errors can be displayed.

Example for an error display: C

```
First Error                Second Error
 14   01   18   40         16   00   19   20
  |    |    |    |
  |    |    |    |------- Error code
 CC   HH   RR              40 = CRC check
                           30 = Record
                                = not found
                           20 = Underrun/Overrun
```

Notes:
This program when started cannot be stopped except by pressing 'MOD SEL' which causes a return to the M/S Program selection picture.

If an error is detected during a Read ID that follows a seek to the next cylinder, which is necessary to check if the preceding seek was successful, the surface analysis test is discontinued, a reference code is displayed, and after pressing ENTER the I/O DISKETTE DRIVE MAINTENANCE PROGRAM is displayed.

Test Handling - Results

G

```
+-------------------------------------------------------------+
|              53FD DISKETTE SURFACE ANALYSIS                 |
|                                                             |
| 140118.40.160019.20 <---- C                                 |
| ............................................................|
| ............................................................|----- A
| ............................................................|
| ............................................................|
|                                                             |
|          NUMBER OF DEFECTIVE TRACKS 0000                    |
|                                   +                         |
|                                   |                         |
| SELECTION:                        |                         |
|          TIMER:  OFF     DATA:    |   ADDR:                 |
|                                   |                         |
|                                   |   STOPPED:              |
+-----------------------------------|-------------------------+
                                    |
                                    B
```

A Four lines for error displays. Up to eight errors can be displayed per line.

B Count of all tracks in error found. This count can exceed the count of displayable errors (32).

 MD

I/O Diskette Drive Tests (continued)

Test Handling - Actions

Purpose

This program is only intended to produce copies of control and/or diagnostic diskettes. These diskettes are two D-type diskettes with a 256 bytes/record format. Therefore the

- Diskette to be formatted must be a 2D-type diskette.
- Diskette is formatted for 256 bytes record.
- If other type diskettes are mounted unpredictable errors may occur.

Test Selection 9

By typing in a '9' the 'I/O Diskette Drive Copy and Formatting Program' is invoked. [H]

This program offers two subselections:

1 = Formatting and Copy Diskette Routine
2 = Copy only Diskette Routine

- The routine is about fifteen minutes for subselection one and seven minutes for subselection two. These programs cannot be stopped during execution.

Subselection 1

This subselection calls a program routine which in its first phase will format a diskette before the contents of another diskette is written (copied) one to one onto this new formatted one.

The messages displayed inform you which cylinder is just processed or, when the execution of a program step is finished, which action has to be taken to continue.

Subselection 2

The program called by this subselection allows you only to execute the copy function. Messages are displayed in the same way as for subselection 1.

Test Handling - Results

```
[H] +-------------------------------------------------------------+
    |          I/O DISKETTE DRIVE COPY AND FORMATTING PROGRAM     |
    |                                                             |
    |              1 = FORMATTING AND COPY DISKETTE ROUTINE       |
    |              2 = COPY ONLY DISKETTE ROUTINE                 |
    |                                                             |
    | SELECTION:                                                  |
    |                                   DATA:            ADDR:    |
    |                                                             |
    |                                    ANSWER                   |
    +-------------------------------------------------------------+
```

Subselection 1 = Example for Message Display:

The first screen display for subselection one tells you

I/O DISKETTE FORMATTING ACTIVE

and asks you to

INSTALL DISKETTE TO I/O DRIVE.
ANSWER

Insert diskette to be formatted and written during the copy operation, press ENTER in reply to ANSWER.

The screen now tells you

I/O DISKETTE FORMATTING ACTIVE

CYLINDER-NUMBER 00 } Running
76 }

The program stops with

CYLINDER-NUMBER 00
FORMATTING END
ANSWER

Press ENTER in reply to ANSWER. This calls the next display message.

I/O DISKETTE COPY PROGRAM ACTIVE
INSTALL DISKETTE TO SYS DRIVE

ANSWER

The diskette just formatted remains in the I/O drive. During the copy program cycle which follows next, the diskette in the system drive is read and the information is written onto the diskette in the I/O drive. Insert the diskette to be copied into the system drive, press ENTER.

I/O DISKETTE COPY ACTIVE

CYLINDER-NUMBER 00 } Running
76 }

The program stops with

END OF COPY DISKETTE
ANSWER

If the diskette in the system drive is not the RAS diskette, reinsert the RAS diskette, then press ENTER to return to the 'M/S Program Selection' picture.

Sense Byte 2 Explanation

Sense byte 2 contains a Hex code for all errors, except command reject cases (which are programming errors). The information in sense byte 2 is a directory to recovery actions as well as an error log. The contents of sense byte 2 should be recorded on SYS REC for later retrieval via EREP.

Error Definition

The errors that may occur in the diskette drive and causing a hex code indication are:

- Data record errors (both when writing or reading data)
- ID field errors (both when writing or reading data)

Read or Write Data Errors

Write and read data errors during plain reading or readback after writing (as occurs on the last record) are indicated by equipment check and automatic retry (or permanent error). The hex code for the individual case is as follows:

Error Code	Type of Read Data Error	User Diskette Control Indication
D3	Data or delete control record CRC-error (data check, auto retry)	No indication
E4	Attachment overrun (equipment check, auto retry)	No indication
D0	Special record transferred (data check, special record transfer)	No indication
D9	Control flag invalid, that is, contains something other than C4 or C6 (EBCDIC) or 44 or 46 (ASCII) (data check, permanent error)	No indication

ID Errors During Read or Write Operations

These errors cause an error code to be displayed. This error code displays the contents of sense byte 2. The following error codes are possible:

Error Code	Type of ID field Error	User Diskette Control Indication
AE	No ID field addr. marker found (intervention required, motion malfunction, and retry after intervention complete)	Not ready, defective diskette
AF	ID field read with wrong cylinder number (intervention required, motion malfunction, retry after intervention complete)	Not ready, defective diskette
E9	ID field read with correct CRC but with incorrect head number, (something other than 0 or 1), or unknown length (equipment check, permanent error)	No indication
E2	Record not found but at least one valid ID found, CRC good (equipment check, auto retry)	No indication
E3	Fast or slow diskette speed (equipment check, auto retry) Note: This error is used as an interim error when an I/O operation is issued to the attachment which is not ready (cover is opened). Because the error is retriable, a subsequent retry operation will result in unit check with intervention complete indicated in the sense data.	Not ready

 MD

System Diskette Drive Test (53FD Diagnostics)

Tests Available

There are no tests available to check functions such as read, write, or seek. These functions are tested automatically during IML. The only function selectable for the system drive (only available if no I/O drive is installed) is the Diskette Surface Analysis test. This test allows the CE to check diskettes for defective tracks.

```
+---------------------------+
| Test Handling - Actions   |
+---------------------------+
```

Prerequisites

- Power complete
- IML complete
- Diagnostic diskette inserted

How to Select the Test

1. Call M/S PROGRAM SELECTION [A]
2. Key in selection for CENTRAL COMPLEX, press ENTER. [B]
3. Select 53FD diagnostic test, press ENTER. [C] This selection will in this case (only system drive installed) directly display the DISKETTE SURFACE ANALYSIS screen picture.
   Follow the instructions given in the display. During the test execution the number of the currently tested track is displayed. At test end picture [D] is displayed. Error information varies depending of the test result.

Function

This test checks the diskette for defective tracks. Data of the first detected error on a track is displayed. Up to eight per line or a total of 32 errors can be displayed.

Example for error display: (C)

```
 First error        Second error
 ___________        ____________
14  01  18  40      16  00  19  20
 |   |   |   |
 |   |   |   |
 V   V   V   +>> Error code
CC  HH  RR          40 = CRC check
                    30 = Record not found
CC = Cylinder       20 = Underrun/overrun
HH = Head
RR = Record
```

Note that this program when started can not be stopped except by pressing MOD SEL key which causes a return to the M/S PROGRAM SELECTION picture.

```
+---------------------------+
| Test Handling - Results   |
+---------------------------+
```

Screen displays:

[A] IBM MAINTENANCE AND SERVICE PROGRAM SELECTIO

[B] CENTRAL COMPLEX TEST SELECTION

[C]

```
+-------------------------------------------------------+
|              DISKETTE SURFACE ANALYSIS                |
|                                                       |
| ..................................................    |
| ..................................................    |
| ......INSTALL DISKETTE TO BE TESTED TO DRIVE......    |
| ..........PRESS ENTER TO START OPERATION..........    |
|                                                       |
|      NUMBER OF DEFECTIVE TRACKS                       |
|                                                       |
|                                                       |
| SELECTION:                                            |
|              TIMER:OFF          DATA:      ADDR:      |
|                                                       |
|                                STOPPED                |
+-------------------------------------------------------+
```

[D]

```
+-------------------------------------------------------+
|              DISKETTE SURFACE ANALYSIS                |
|                                                       |
(C)--->140118.40.160019.20.............................  |
|  ..................................................   |
|  .................................................. <--(A)
|  .................................................  .|
|                                                       |
|      NUMBER OF DEFECTIVE TRACKS 0002 <----------------(B)
|                                                       |
|                                                       |
| SELECTION:                                            |
|              TIMER:OFF          DATA:      ADDR:      |
|                                                       |
|                                STOPPED                |
+-------------------------------------------------------+
```

(A) Four lines for error display. Up to eight errors can be displayed per line.

(B) Total count of all tracks in error. This count can exceed the count of displayable errors which is 32.

This page has been
intentionally left blank

SUPPLEMENT TO MAPS, SECTION 6: CONFIGURE PROCEDURES

TABLE OF CONTENTS

STM

OVERALL PICTURE OF CONFIGURE DOCUMENTATION

```
+----------------------------+
| DISKETTE CONFIG    STM 6100 |  +-----------------------------------+
|                             |  | MAP OF CONFIG SCREENS    STM 6008 |
|                             |  |  +-----------------------------------+
| GENERAL COMMENTS ABOUT      |  |  | 4331 I/O DEV ADDR CHART  STM 6016 |            *** CUSTOMER DOCUMENTATION ***
| CONFIGURING THE CUSTOMER &  |  |  |                                   |            +-----------------------------------/
| THE DIAGNOSTIC DISKETTE     |  |  |                                   |            |  FROM SUCH SOURCES AS SYSGEN,
|                             |  |  |     +-----------------------------------+      |  SYS ASSURANCE MEETINGS, PREVIOUSLY
| 1. FILL OUT SYS CHART       >>>>>>>>>>>>| SYSTEM CHART        STM 6018/6019 |<<<<<<<<  INSTALLED I/O, ETC.
|                             |  |  |     |  +-----------------------------------+    /
| 2. SET TOD CORRECTION       >>>>>>>>>>>>>>>| SET TIME-OF-DAY          STM 6110 |
|                             |  |  |     |  |  +-----------------------------------+
| 3. ALTER CHANNEL NUMBER     >>>>>>>>>>>>>>>>>| ALTER CHANNEL NUMBER     STM 6112 |
|                             |  +--|     |  |  |  +-----------------------------------+
| 4. CONF DISPLAY/PRINTERS    >>>>>>>>>>>>>>>>>>>| CONF DISPLAYS/PRINTERS   STM 6124 |
|                             |     +-----|  |  |  |  +-----------------------------------+
| 5. CONF CUST DISKETTE       >>>>>>>>>>>>>>>>>>>>>>| CONF CUST DISKETTE       STM 6126 |
|                             |        +--|  |  |  |  +-----------------------------------+
| 6. CONF FTA 1 OR 3 (disk)   >>>>>>>>>>>>>>>>>>>>>>>>| CONF FTA 1 OR 3 (DISK)   STM 6130 |
|                             |           +--|  |  |  |  +-----------------------------------+
| 7. CONF FTA 2 (8809)        >>>>>>>>>>>>>>>>>>>>>>>>>>>| CONF FTA 2 (8809)        STM 6135 |
|                             |              +--|  |  |  |  +-----------------------------------+
| 8. CONF HSC                 >>>>>>>>>>>>>>>>>>>>>>>>>>>>>>| CONF HSC                 STM 6143 |
|                             |                 +--|  |  |  |  +-----------------------------------+
| 9. CONF BMPX 1 OR 2         >>>>>>>>>>>>>>>>>>>>>>>>>>>>>>>>>| CONF BMPX1 OR 2          STM 6145 |
|                             |                    +--|  |  |  |  +-----------------------------------+
|10. CONF CA LINES            >>>>>>>>>>>>>>>>>>>>>>>>>>>>>>>>>>>>| CONF CA LINES            STM 6160 |
|                             |                       +--|  |  |  |  +-----------------------------------+
|11. CONF LOOP ADAPTER        >>>>>>>>>>>>>>>>>>>>>>>>>>>>>>>>>>>>>>>>|    LOOP ADAPTER CONFIG. STM 6165 |
|                             |                       +--|  |  |  |  |  |  +-----------------------------------+
| EXPLAIN WHAT HAS JUST BEEN  |                          |  |  |  |  |  |  |  COPY CONFIGURE           STM 6170 |
| DONE AND WHY COPY MUST BE   |                          +--|  |  |  |  |  |                                    |
| FINISHED BEFORE DIAG RUN.   |                             |  |  |  |  |  |    (USE MAP FE90 TO DIRECT THE     |
|                             |                             +--|  |  |  |  |     COPY CONFIGURE OPERATION)      |
|12. SELECT COPY CONF &       >>>>>>>>>>>>>>>>>>>>>>>>>>>>>>>>>>>>>>>>>>>>>>>>|                                    |
|    FOLLOW INSTRUCTIONS      |                                +--|  |  |  |   FFFFFFF EEEEEEE  99999   00000   |
+----------------------------+                                   |  |  |  |   F       E       9     9 0     0  |
                                                            +--|  |  |  |   FFFF    EEEE     999999 0  0  0  |
                                                               | v|  |  |   F       E            9 0     0  |
+----------------------------+  +----------------------------+  +-v| v|   F       EEEEEEE      9   00000   |
|                   STM 6200 |  |                   STM 6190 |    v+-v|                                    |
| DEVICE RESTRICTIONS ON THE |  | MES UPDATE WITHOUT A NEW   |    v  v+-----------------------------------+
|          4331              |  |          DISKETTE          |    v  v
|                            |  |                            |    v  *>>>>>>>>>>>>>>>>>>>>>>>>>>>>>>>>>>>>>>>>>>>>>>>>>>>>>>>>>>*
|                            |  |                            |    v      *** STM FEATURES, CA SECTION ***                v     *** STM FEATURES, VOL. 15 ***
|                            |  |                            |    v      +-----------------------------------+         v     +-----------------------------------+
|                            |  |                            |    v      |  LINE DESCRIPTION CHARTS AT THE   |         v     | SECTION 6: CONFIGURATION          |
|                            |  |                            |    v      |  END OF THE CA SECTION.           |         v     |  +-----------------------------------+
|                            |  |                            |    *>>>>>>|                                   |         *>>>>>|  | LOOP OP.-GUIDE                    |
|                            |  |                            |    v      |  +-----------------------------------+           |  |  +-----------------------------------+
|                            |  |                            |    v      |  | CA CONFIGURE MAP 88FF             |           |  |  | LOOP FUNCTIONAL CHARACTERISTICS   |
|                            |  |                            |    v      |  |                                   |           |  |  |                                   |
|                            |  |                            |    *>>>>>>>>>|                                   |           |  |  |                                   |
|                            |  |                            |           |  |                                   |           |  |  |                                   |
|                            |  |                            |           |  |                                   |           |  |  |                                   |
|                            |  |                            |           |  |                                   |           |  |  |                                   |
|                            |  |                            |           +--|                                   |           +--|  |                                   |
|                            |  |                            |              !                                   |              |  |                                   |
+----------------------------+  +----------------------------+              +-----------------------------------+              +-----------------------------------+
```

CONFIGURE SCREENS

THIS PAGE IS INCLUDED HERE TO SHOW THE RELATIONSHIP BETWEEN THE CONFIGURE SCREENS. THE PICTURES ARE SMALL SO THAT THEY CAN ALL BE SHOWN ON ONE PAGE. FOR DETAILED INFORMATION, GO TO THE STM PAGE NOTED BY THE PICTURE.

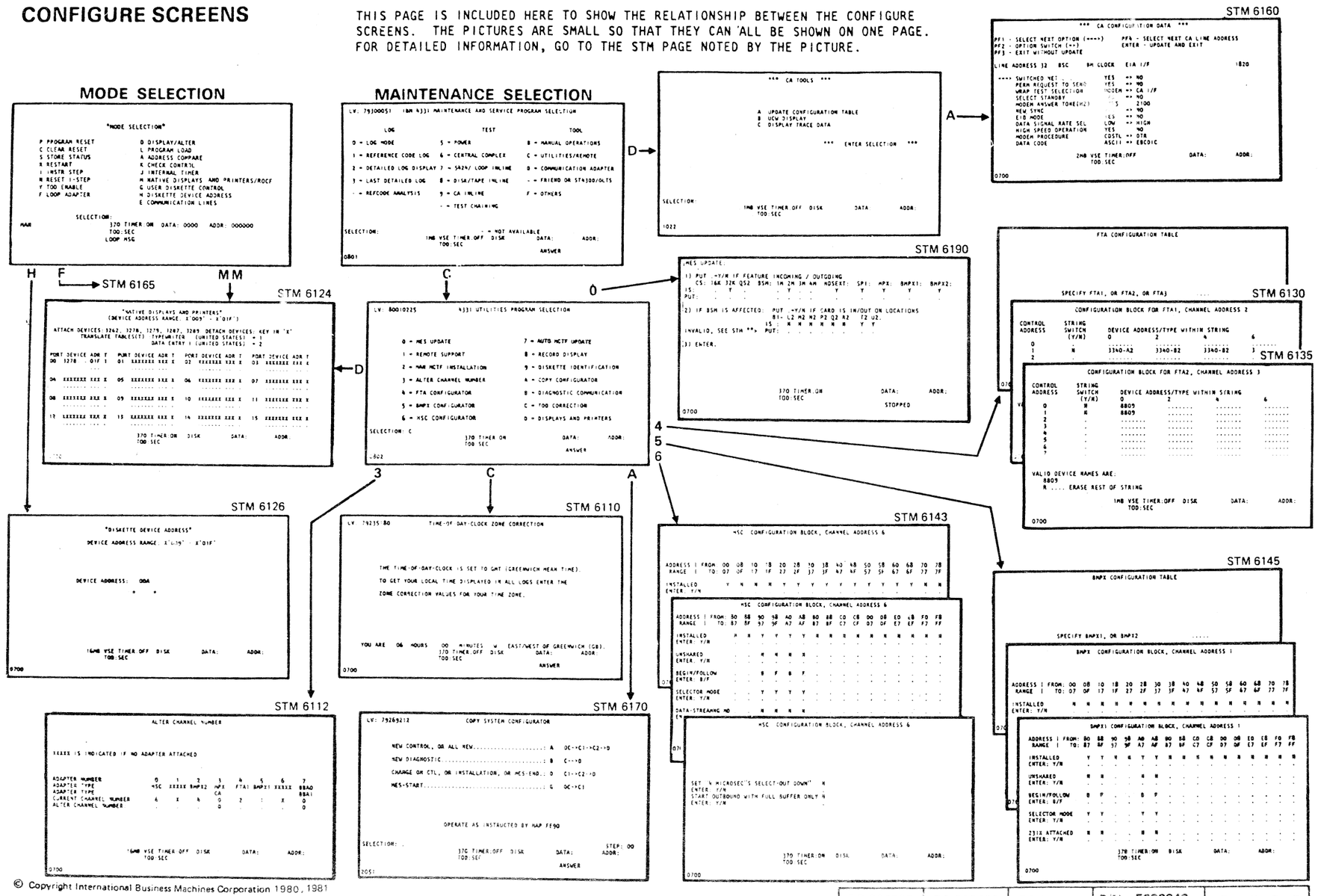

I/O DEVICE ADDRESS CHART

THE TABLE SHOWS CHANNEL ADDRESSES 1, 2 AND 3, WHICH ARE USED IN ALL OF THE EXAMPLES. WITH THE EXCEPTION OF THE BYTE CHANNEL, WHICH MUST BE CHANNEL 0, ANY ADDRESS FROM 1 THRU 6 MAY BE ASSIGNED TO ANY CHANNEL.

CHANNEL 0 - CA - MPX - DCA - MFCU

ADDRESSES SHOWN ARE THE ONLY ADDRESSES ALLOWED.

WITH CA INSTALLED, ADDRESS 3B IS NOT AVAILABLE. IN ADDITION, ONE ADDRESS IS REMOVED FROM BYTE MPX FOR EACH CA LINE INSTALLED. THE CHART INDICATES THE ADDRESSES AFFECTED BY THE CA FEATURES (MPX ADDRESSES 30 THRU 37).

CHANNEL 1 - BLOCK MPX 1

ALL ADDRESSES ARE VALID FOR SHARED/UNSHARED SUBCHANNELS.

CHANNEL 2 - FTA 1 - NATIVE ATTACHED DISKS

ADDRESSES SHOWN IN TABLE ARE SUGGESTED ADDRESSES.

3340/44 CAN USE ONLY THE ADDRESS SHOWN
3310 CAN USE X0 THRU X3, WHERE X = 0 THRU 7
3370 CAN USE X0 THRU X7, WHERE X = 0 THRU 7

WHEN USING 231x EMULATOR -

A 3310/3370 HOST ADDR IS SPECIFIED AT IPL. THE 1ST EMULATOR ADDRESS STRING IS ASSIGNED TO THIS ADDRESS. THE REMAINING EMULATOR ADDRESS STRINGS ARE ASSIGNED, IN ORDER, UP TO THE HIGHEST INSTALLED 3310/3370 ADDR OR UNTIL ALL OF THE EMULATOR STRINGS HAVE BEEN ASSIGNED.

THE TABLE AT THE BOTTOM OF THE PAGE RELATES EMULATOR ADDRESS STRINGS TO 1ST, 2ND, ETC HOST DEVICES FOR ALL OF THE POSSIBLE EMULATIONS ON 3310 OR 3370.

3310/3370 ADDRESSING MUST START WITH 2X0 AND MUST USE CONTIGUOUS ADDRESS STRINGS. I.E. 250-253 AND 260-263 IS OK, BUT 240-243 AND 260-263 WILL WORK ONLY IF EMULATION STARTS AT 260 OR HIGHER.

SEE IBM 4331 PROCESSOR COMPATIBILITY FEATURES - IBM FORM GA33-1528

CHANNEL 3 - FTA 2 - 8809 NATIVE ATTACHED TAPES

ADDRESSES SHOWN ARE THE ONLY ADDRESSES ALLOWED.

ADDRESSES MUST START AT 00. ADDITIONAL ADDRESSES MUST BE CONTIGUOUS. FOR EXAMPLE, THREE 8809'S MUST BE 00, 01 AND 02.

CHANNEL 4 - BLOCK MPX 2 (SAME AS CHANNEL 1)

CHANNEL 5 - FTA 3 (SAME AS CHANNEL 2)

CHANNEL 6 - HSC (SAME AS CHANNEL 1)

CH 3 FTA2	CHANNEL 2 FTA 1 3340	3344	3370	3310
00	00		20	40 60
01	01		21	41 61
02	02	2A 4A 6A	22	42 62
03	03	2B 4B 6B	23	43 63
04	04	2C 4C 6C	24	
05	05	2D 4D 6D	25	
	06	2E 4E 6E	26	
	07	2F 4F 6F	27	
	10		30	50 70
	11		31	51 71
	12	3A 5A 7A	32	52 72
	13	3B 5B 7B	33	53 73
	14	3C 5C 7C	34	
	15	3D 5D 7D	35	
	16	3E 5E 7E	36	
	17	3F 5F 7F	37	

CH 1 BMPX	CHANNEL 0 CA	MPX		DCA	MFCU	LA
UN		UN	SHARED			FOR ADDRESS
SHRD		SHRD				ASSIGNMENT
//		20	80-8F			OF LOOP
SHRD		21	90-9F			I/Os REFER
00		22	A0-AF			TO VOL.15
01		23	B0-BF			SECTION 6.
02		24				
|		25				
|		26				
|		27				
|		28				STATION
|		29		09		ADDRESS
|		2A		0A		X'01'-'FE'
|		2B		0B		
|		2C		0C	4C	SUBCHANNEL
|		2D		0D		ADDRESSES
|		2E		0E		
|		2F		0F		X'41'-'7E'
|						(SNA DEVICE)
|	30	L1---L1	30	10		
//	31	L2---L2	31	11		X'40'
|	32	L3---L3	32	12		(NON SNA
|	33	L4---L4	33	13		DEVICE)
|	34	L5---L5	34	14		
|	35	L6---L6	35	15		
|	36	L7---L7	36	16		
|	37	L8---L8	37	17		
|			38	18		
|			39	19		
|			3A	1A		
|		CA---CA	3B	1B		
|			3C	1C		
FD			3D	1D		
FE			3E	1E		
FF			3F	1F		

CUSTOMER DISKETTE MUST USE AN ADDRESS FROM X'009' TO X'01F'

HOST	3310 2311	2314	2311	3370 2314	3330	3340
1ST	290-297	290-292	290-282	290-299	290-292	290-293
2ND	298-29F	298-29A	2B8-2DA	2A0-2A9	298-29A	298-29B
3RD	2A0-2A7	2A0-2A2		2B0-2B9	2A0-2A2	2A0-2A3
4TH	2A8-2AF	2A8-2AA		2C0-2C9	2A8-2AA	2A8-2AB
5TH	2B0-2B7	2B0-2B2		2D0-2D9	2B0-2B2	2B0-2B3
6TH	2B8-2BF	2B8-2BA		2E0-2E9	2B8-2BA	2B8-2BB
7TH	2C0-2C7	2C0-2C2		2F0-2F9	2C0-2C2	2C0-2C3
8TH	2C8-2CF	2C8-2CA			2C8-2CA	2C8-2CB
9TH					2D0-2D2	2D0-2D3
10TH					2D8-2DA	2D8-2DB
11TH					2E0-2E2	2E0-2E3
12TH					2E8-2EA	2E8-2EB
13TH					2F0-2F2	2F0-2F3
14TH					2F8-2FA	2F8-2FB

SYSTEM CHART

CHANNEL ASSIGNMENTS

ASSIGNMENTS FOR 4331 MODEL 2		
CHANNEL NUMBER	ASSIGNED ADAPTER	REMARKS
0	MPX/CA/BBA	MUST BE CHANNEL 0
1	BMPX 1	
2	FTA 1	
3	FTA 2	EXCLUSIVE WITH BMPX 2 OR HSC
4	BMPX 2	EXCLUSIVE WITH FTA 2
5	FTA 3	EXCLUSIVE WITH HSC
6	HSC	EXCLUSIVE WITH FTA 2 OR FTA 3 INSTALLED

ASSIGNMENTS FOR 4331 MODEL 11		
CHANNEL NUMBER	ASSIGNED ADAPTER	REMARKS
0	MPX/CA/BBA	MUST BE CHANNEL 0
1	BMPX	
2	FTA 1	
3	FTA 2	

Note: Channel numbers are usually assigned as shown in in the charts. However, addresses 1 through 6 may be assigned to any channel except MPX by using the ter channel configure screen.
See 'STM 6112'.

TIME-OF-DAY (TOD) CORRECTION IS E/W _____HRS

BBAO (DCA) IS CHANNEL 0							
PORT	DEV TYPE	ADDR	T	PORT	DEV TYPE	ADDR	T
00	_____	___	__	08	_____	___	__
01	_____	___	__	09	_____	___	__
02	_____	___	__	10	_____	___	__
03	_____	___	__	11	_____	___	__
04	_____	___	__	12	_____	___	__
05	_____	___	__	13	_____	___	__
06	_____	___	__	14	_____	___	__
07	_____	___	__	15	_____	___	__

MPX IS CHANNEL 0			
DEV TYPE	ADDRESS	DEV TYPE	ADDRESS
_____	_____	_____	_____
_____	_____	_____	_____
_____	_____	_____	_____
_____	_____	_____	_____
_____	_____	_____	_____
_____	_____	_____	_____
_____	_____	_____	_____
_____	_____	_____	_____

CA IS CHANNEL 0		
INST	ADDR	LINE TYPE
Y / N	30	_____
Y / N	31	_____
Y / N	32	_____
Y / N	33	_____
Y / N	34	_____
Y / N	35	_____
Y / N	36	_____
Y / N	37	_____

LOOP ADAPTER

LOOP PRECONFIGURED BY MANUFACTORING TO TEST MACHINE AT INSTALLATION.
ACTUAL CONFIGURING OF LOOP IS THE CUSTOMER'S RESPONSIBILITY.

CUST DISKETTE IS CHANNEL 0		MFCU IS CHANNEL 0	
INSTALLED	ADDRESS	INSTALLED	ADDRESS
Y N	_____	Y N	4C

CHANNEL SUMMARY:

FTA 1 IS CHANNEL _____ HSC IS CHANNEL _____
FTA 2 IS CHANNEL _____ BMPX 1 IS CHANNEL ___
FTA 3 IS CHANNEL _____ BMPX 2 IS CHANNEL ___

SEE DETAILED LINE DESCRIPTION , STM FEATURES, CA SECTION AND MAP 88FF.

SEE DETAILED INFORMATION IN STM VOL.15 SECTION 6 'CONFIGURATION'.

SYSTEM CHART (CONTINUED)

FTA 1 (DISK)							FTA 2 (8809)		FTA 3 (DISK)						
DEV TYPE	ADDR	S/SW	.	DEV TYPE	ADDR	S/SW	DEV TYPE	ADDR	DEV TYPE	ADDR	S/SW	.	DEV TYPE	ADDR	S/SW
		Y/N	.			Y/N					Y/N	.			Y/N
		Y/N	.			Y/N					Y/N	.			Y/N
		Y/N	.			Y/N					Y/N	.			Y/N
		Y/N	.			Y/N					Y/N	.			Y/N
		Y/N	.			Y/N					Y/N	.			Y/N
		Y/N	.			Y/N					Y/N	.			Y/N
		Y/N	.			Y/N					Y/N	.			Y/N
		Y/N	.			Y/N					Y/N	.			Y/N

BLOCK 1 MULTIPLEXER (BMPX)					BLOCK 2 MULTIPLEXER (BMPX)				
DEV TYPE	ADDR	.	DEV TYPE	ADDR	DEV TYPE	ADDR	.	DEV TYPE	ADDR
		.					.		
		.					.		
		.					.		
		.					.		
		.					.		
		.					.		
		.					.		
		.					.		
		.					.		

HIGH SPEED CHANNEL (HSC)*				
DEV TYPE	ADDR	.	DEV TYPE	ADDR
		.		
		.		
		.		
		.		
		.		
		.		
		.		
		.		
		.		

* Note: Any control unit, such as the 3880, which can run in data streaming mode, must be internally switched to data streaming mode! This allows 400 feet of interface cable length.

DISKETTE CONFIGURATION

THE FUNCTIONAL MICROCODE CAN BE ON ONE OR TWO DISKETTES. A 4331 CAN BE SHIPPED WITH ONE OR TWO SETS OF FUNCTIONAL MICRO CODE (CONTROL DISKETTES) AND ONE DIAGNOSTIC DISKETTE. THEREFORE, YOU WILL RECEIVE EITHER 1, 2 OR 4 CONTROL DISKETTES AND ALWAYS 1 DIAGNOSTIC DISKETTE.

WHEN YOU ARE READY TO CONFIGURE THE FIRST CONTROL DISKETTE (FU1, SEQ. 1), THERE MAY OR MAY NOT BE ANY ADDRESSES CONFIGURED.

YOU MUST CHECK/ADD/DELETE CONFIGURATION DATA SO THAT IT AGREES WITH THE PHYSICAL MACHINE AND THE CUSTOMER ADDRESS ASSIGNMENTS.

OPERATING THE 4331 WITH INCORRECT CONFIGURATION DATA CAN CAUSE HARD DIAGNOSE PROBLEMS WHEN CUSTOMER APPLICATIONS ARE RUN ON THE SYSTEM.

START MANUAL CONFIGURATION OF SYSTEM CONTROL DISKETTE.

THIS PROCEDURE SHOULD BE FOLLOWED TO DO A COMPLETE MANUAL CONFIGURATION OF THE 4331 SYSTEM. EACH CONFIGURATION STEP DIRECTS YOU TO DETAILED INFORMATION FOR THAT PARTICULAR CONFIGURATION ACTION. WHEN YOU HAVE COMPLETED THE ACTION, RETURN TO THE NEXT STEP ON THIS PAGE.

```
STEP 1.  CHECK THE 'SYSTEM CHART.'  STM - 6018 AND 6019.
+-----+
|     |   RECORD ANY MISSING INFORMATION.  THE 'SYSTEM CHART' WILL
|     |   BE USED FOR STEPS 2 THROUGH 10.
+-----+

STEP 2.  SET TIME-OF-DAY CORRECTION.  STM - 6110
+-----+
|     |   USE INFORMATION FROM THE 'SYSTEM CHART' SET TOD CORRECTION.
|     |   THIS MUST BE DONE SO THAT TOD ON THE LOGS WILL MATCH THE TOD
+-----+   OF THE ERROR.

STEP 3.  ALTER CHANNEL NUMBER.  STM - 6112
+-----+
|     |   USE INFORMATION FROM THE 'SYSTEM CHART' TO CHECK OR ALTER
|     |   CHANNEL NUMBER SETTINGS.
+-----+

STEP 4.  CONFIGURE NATIVE DISPLAYS AND PRINTERS.  STM - 6124
+-----+
|     |   USE INFORMATION FROM THE 'SYSTEM CHART' TO CONFIGURE NATIVE
|     |   DEVICES.
+-----+

STEP 5.  ASSIGN ADDRESS TO CUSTOMER DISKETTE. STM - 6126
+-----+   (SKIP IF NO CUSTOMER DISKETTE)
|     |
|     |   USE INFORMATION FROM THE 'SYSTEM CHART' TO ASSIGN THE CUSTOMER
+-----+   DISKETTE ADDRESS.

STEP 6.  CONFIGURE FTA 1 OR 3.  STM - 6130  (SKIP IF FTA NOT INSTALLED)
+-----+
|     |   USE INFORMATION FROM THE 'SYSTEM CHART' TO CONFIGURE FTA 1 OR 3.
|     |
+-----+

STEP 7.  CONFIGURE FTA 2.  STM - 6135  (SKIP IF FTA 2 NOT INSTALLED)
+-----+
|     |   USE INFORMATION FROM THE 'SYSTEM CHART' TO CONFIGURE FTA 2.
|     |
+-----+

STEP 8.  CONFIGURE HIGH SPEED CHANNEL.  STM - 6143
+-----+   (SKIP IF HSC NOT INSTALLED)
|     |
|     |   USE INFORMATION FROM THE 'SYSTEM CHART' TO CONFIGURE BLOCK MPX.
+-----+

STEP 9.  CONFIGURE BLOCK MULTIPLEX CHANNEL 1 OR 2.  STM - 6145
+-----+   (SKIP IF BMPX(S) NOT INSTALLED)
|     |
|     |   USE INFORMATION FROM THE 'SYSTEM CHART' TO CONFIGURE BLOCK MPX.
+-----+

STEP 10. CONFIGURE CA. STM - 6160  (SKIP IF CA NOT INSTALLED)
+-----+   IN ADDITION TO THE 'SYSTEM CHART' YOU WILL ALSO NEED THE
|     |   DETAILED CA LINE DESCRIPTIONS FROM THE STM FEATURES, AND MAP
|     |   88FF. THE LINE DESCRIPTION CHARTS ARE AT END OF THE CA
+-----+   PAGES IN THE STM FEATURES BOOK.

STEP 11. LOOP CONFIGURATION STM 6165 (SKIP IF NOT INSTALLED).
+-----+   THE LOOP ADAPTER CONFIGURATION IS THE RESPONSIBILITY
|     |   OF THE CUSTOMER. THE LOOP IS PRECONFIGURED TO ALLOW
|     |   TESTING OF THE SYSTEM.
+-----+   CONTINUE WITH NEXT STEP.
```

BY COMPLETING STEPS 1 THROUGH 11 YOU HAVE WRITTEN YOUR EXACT CONFIGURATION ON ONE OF THE CONTROL DISKETTES. YOU MUST NOW COPY THIS DATA TO THE OTHER CONTROL DISKETTE. THE CONFIGURATION DATA MUST ALSO BE COPIED TO THE DIAGNOSTIC DISKETTE TO PREVENT INVALID ERROR STOPS DURING TESTING.

```
STEP 12. DO THE COPY CONFIGURE.  STM - 6170
+-----+
|     |
|     |
+-----+
```

ALL OF THE SYSTEM DISKETTES ARE NOW CONFIGURED.

IF YOU WERE DIRECTED TO STM SECTION 6 BY SOME OTHER INSTRUCTIONS (EC, MES, INSTALL MANUAL, ETC.), RETURN TO THOSE INSTRUCTIONS.

This page has been
intentionally left blank

CONFIGURE TIME OF DAY CORRECTION

PURPOSE

OFTEN A CUSTOMER USES GMT (GREENWICH MEAN TIME) TO GIVE A COMMON TIME BASE THROUGHOUT HIS NATIONWIDE OR WORLDWIDE ORGANIZATION. HOWEVER, HE ALSO NEEDS LOCAL TIME FOR REALISTIC TIMESTAMPING OF PRINTOUTS AND CONSOLE MESSAGES. FOR THESE PURPOSES THE CUSTOMER HAS TO SET A TOD CORRECTION FACTOR (SOFTWARE) TO ADJUST BETWEEN GMT AND LOCAL TIME. THE CE ALSO NEEDS THIS CORRECTION FOR REALISTIC TIMESTAMPING OF HIS LOGS. BUT HE HAS NO ACCESS TO THE SOFTWARE TOD CORRECTION. THEREFORE THE SYSTEM HAS A SECOND CORRECTION FACTOR SETTING.

HANDLING

THE SOFTWARE TOD CORRECTION FACTOR IS SET BY THE CUSTOMER AT SYSTEM GENERATION OR IPL TIME TO SET THE SYSTEM CLOCK TO GMT AND TO ADJUST TO LOCAL TIME FOR TIMESTAMPING. THE SECOND TOD CORRECTION HAS TO BE SET BY THE CE/FE TO ASSURE THAT THE TIME RECORDED IN A LOG INDICATES THE LOCAL TIME, (SEE WARNING BELOW).

TO CONFIGURE TOD CORRECTION YOU MUST KNOW THE TOD CORRECTION USED BY THE CUSTOMER SYSTEM. MAKE SURE THE CUSTOMER TOD CORRECTION IS ENTERED ON THE 'SYSTEM CHART' ON STM 6018.
THE TOD ON LOGS WILL ONLY BE CORRECT IF YOUR TOD CORRECTION IS THE SAME AS THE TOD CORRECTION USED BY THE CUSTOMER SYSTEM.
IF THE CUSTOMER INDICATES THAT NO TOD CORRECTION IS USED, THEN YOU MUST SET YOUR TOD CORRECTION 00 HOURS AND 00 MINUTES EAST OR WEST.

THE SCREEN EXAMPLE ON THIS PAGE SHOWS THE CORRECT SETTING FOR CHICAGO, DURING THE WINTER (CENTRAL STANDARD TIME). IN THE SUMMER WITH DAYLIGHT SAVING TIME, THE SETTING WOULD BE 07 HRS INSTEAD OF 06 HRS.

WARNING
THE LOOP FEATURE ALSO USES THE CE TOD-CORRECTION FACTOR TO GIVE CORRECT TIME TO THE LOOP TERMINALS. THEREFORE ALWAYS CONTACT THE CUSTOMER FIRST IF YOU WANT TO CHANGE THE TOD-CORRECTION FOR A SYSTEM THAT HAS THE LOOP FEATURE INSTALLED.

CONFIGURE PROCEDURE

1. DISPLAY THE 'TOD CORRECTION' SCREEN.
   A. ALT KEY WITH MODE SEL TO GET THE MAINTENANCE SELECTION SCREEN.
   B. SELECT 'UTILITIES/REMOTE'
   C. SELECT 'TOD CORRECTION.'
      THE ACTUAL CORRECTION FACTOR IS DISPLAYED, DEFAULT = 00 00 E.

2. IF THE DISPLAYED TOD-CORRECTION IS CORRECT, GO TO STEP 4.
   IF NOT, ENTER THE CORRECT FIGURES, HIT ENTER AND WAIT FOR THE 'ACTION DONE' MESSAGE.

VERIFICATION
TO VERIFY WHICH TIME A LOG WILL GET AS TIME STAMP DO THE FOLLOWING:
AFTER THE CUSTOMER HAS PERFORMED IPL,
SELECT EITHER 'ERASE SELECTIVE LOG' OR 'ERASE ALL LOGS'
FROM THE 'LOG MODE' MENU. IF THE TIME DISPLAYED ON THE SCREEN ABOVE THE SYSTEM MODE (370 OR VSE) MATCHES THE LOCAL (RE[illegible]) TIME, TOD CORRECTION IS SET PROPERLY. IF THE TIME DOES NOT MATCH, CORRECT THE ACTUAL CORRECTION FACTOR BY THE DIFFERENCE OF LOCAL AND DISPLAYED TIME.

3. THE SCREEN DISPLAYS NOW THE NEW CORRECTION FACTOR WHICH WAS JUST WRITTEN ON THE DISKETTE.
   IF THE SETTING OF THE TOD CORRECTION IS NOT PART OF THE SYSTEM CONFIGURATION, DO COPY CONFIGURATOR TO GET THE NEW SETTING ON ALL OTHER DISKETTES.

4. ALT KEY AND MODE SEL WILL RETURN YOU TO THE MAINTENANCE SELECTION SCREEN.

THE TOD CONFIGURE ACTION IS COMPLETED.

```
LV: 79235180          TIME-OF-DAY-CLOCK ZONE CORRECTION



        THE TIME-OF-DAY-CLOCK IS SET TO GMT (GREENWICH MEAN TIME).

        TO GET YOUR LOCAL TIME DISPLAYED IN ALL LOGS ENTER THE

        ZONE CORRECTION VALUES FOR YOUR TIME ZONE.



 YOU ARE   06  HOURS    00   MINUTES   W   EAST/WEST OF GREENWICH (GB).
                      370 TIMER:OFF  DISK          DATA:        ADDR:
                      TOD:SEC
                                                   ANSWER
0700
```

TOD ERROR MESSAGES

'WRONG INPUT' ALONG WITH RC FE622081.

MEANS: THE TOTAL OF THE HOURS AND MINUTES IS GREATER THAN 12 HOURS.

ALTER CHANNEL NUMBER

CONFIGURE PROCEDURE

1. DISPLAY THE 'ALTER CHANNEL NUMBER' SCREEN
   A. ALT KEY WITH MOD SEL TO GET THE MAINTENANCE SELECTION SCREEN.
   B. SELECT 'UTILITIES/REMOTE'
   C. SELECT 'ALTER CHANNEL NUMBER'

2. IF THE DISPLAYED 'CURRENT CHANNEL NUMBERS' MATCH THE CHANNEL SUMMARY IN THE 'SYSTEM CHART', GO TO STEP 6.

3. MAKE ANY NEEDED CHANGES TO THE 'ALTER CHANNEL NUMBER' LINE AND HIT ENTER.

   ERROR MESSAGES AND PROBABLE CAUSES ARE LISTED UNDER THE SCREEN PICTURE.

4. YOU MUST NOW ANSWER A QUESTION. --STORE Y/N--
   IF THE SCREEN IS CORRECT, ENTER 'Y' AND WAIT FOR MSG 'CHANGE IS STORED ON DISKETTE.' IF THE SCREEN IS NOT CORRECT, ENTER AN 'N' AND GO BACK TO STEP 3.

5. HIT ENTER AGAIN IF YOU WANT TO DISPLAY THE NEW CHAIN CONFIGURATION.

6. MOD SEL WILL RETURN YOU TO THE MOD SELECTION SCREEN.

THE CHANNEL ADDRESS CONFIGURATION IS COMPLETE.

```
+-----------------------------------------------------------------------------+
|                              ALTER CHANNEL NUMBER                           |
|                                                                             |
|                                                                             |
|   XXXXX IS INDICATED IF NO ADAPTER ATTACHED                                 |
|                                                                             |
|                                                                             |
|   ADAPTER NUMBER            0     1     2     3     4     5     6     7     |
|   ADAPTER TYPE              HSC   XXXXX BMPX2 MPX   FTA1  BMPX1 XXXXX BBA0  |
|   ADAPTER TYPE                                CA                      BBA1  |
|   CURRENT CHANNEL NUMBER    6     X     4     0     2     1     X     0     |
|   ALTER CHANNEL NUMBER:     .     .     .     0     .     .     .     0     |
|                                                                             |
|                                                                             |
|                                                                             |
|                   16MB VSE TIMER:OFF  DISK        DATA:        ADDR:        |
|                        TOD:SEC                                              |
|                                                                             |
|  0700                                                                       |
+-----------------------------------------------------------------------------+
```

ERRORS FOR ALTER CHANNEL NUMBER

'DUPLICATE CHANNEL NUMBER'	--- CHECK SCREEN. ONLY ONE OF EACH CHANNEL NUMBER ALLOWED.
'NO ADAPTER ATTACHED'	--- YOU HAVE ENTERED A NUMBER UNDER AN 'X'.
'CHANNEL NUMBER NOT VALID'	--- ONLY 1 THRU 6 ARE ALLOWED.
'INVALID CHARACTER'	--- CURSUR WILL POINT TO INVALID AREA.
'CHANNEL 0 WAS SPECIFIED'	--- ONLY MPX, CA, BBA0 AND BBA1 CAN BE CHANNEL 0
'INVALID OR MISSING STORE COMMAND'	--- ANSWER YES OR NO AND HIT ENTER.
'INCORRECT CONFIGURATION TABLE'	--- YOU MUST COPY CONFIG FROM A GOOD DISKETTE TO CORRECT THIS.
'CHANNEL 0 MUST NOT BE CHANGED'	--- MPX, CA, BBA0 AND BBA1 MUST BE CHANNEL 0.

CONFIGURATION OF NATIVE DISPLAYS AND PRINTERS

THE DISPLAY CLUSTER ADAPTER (DCA) SUPPORTS EITHER 8 OR 16 DEVICES. THE SCREEN SHOWN IS FOR 16 DCA PORTS. ON PORT 00, THE DEVICE/ADDR/T FIELDS ARE PRE-CONFIGURED FOR 3278-2A/01F/1. IF 3279-2C IS SHIPPED AS OPERATOR CONSOLE, THE PRECONFIGURED DEVICE TYPE FOR PORT 00 HAS TO BE CHANGED.

CONFIGURATION PROCEDURE

1. DISPLAY THE 'NATIVE DISPLAYS AND PRINTERS' SCREEN.
   A. MODE SEL TO GET THE 'MODE SELECTION' SCREEN.
   B. SELECT 'NATIVE DISPLAYS AND PRINTERS/ROCF'.
   C. SELECT 'NATIVE DISPLAYS AND PRINTERS.'

2. IF THE DISPLAYED INFORMATION IS CORRECT ACCORDING TO THE 'SYSTEM CHART', GO TO STEP 5.

3. USING 'SYSTEM CHART', COMPLETE THE 'DEVICE/ADR/T' FIELD (T FIELD IS NOT NEEDED FOR THE 3289) FOR EACH PORT TO BE USED. VALID ENTRIES ARE SHOWN AT THE TOP OF THE SCREEN.

   ONLY THE FIELDS MARKED WITH THE INTENSIFIED '••••.....' CAN BE CHANGED.
   ENTER THE DEVICE EXACTLY AS SHOWN, STARTING AT THE LEFT END OF THE FIELD.
   THE MODEL NUMBER NEED NOT BE TYPED IN. ENTER ONLY THE 4 DIGIT DEV.TYPE LEFT ADJUSTED.

4. HIT ENTER, AND WAIT FOR 'UPDATE COMPLETE, PRESS IML' MSG. ** DO NOT IML ** THIS IS A CUSTOMER MESSAGE. IML AFTER ALL CONFIGURATION ACTIONS ARE COMPLETED. THE SCREEN NOW SHOWS YOUR CURRENT CONFIGURATION.

5. MODE SELECT TO RETURN TO THE 'MOD SELECTION' SCREEN.

CONFIGURATION OF 'NATIVE DISPLAYS AND PRINTERS' IS COMPLETE.

```
                    *NATIVE DISPLAYS AND PRINTERS*
              (DEVICE ADDRESS RANGE: X'009' - X'01F')

 ATTACH DEVICES:3262, 3278, 3279, 3287, 3289  DETACH DEVICES: KEY IN 'X'
        TRANSLATE TABLES(T) :TYPEWRITER   (UNITED STATES)  = 1
                             DATA ENTRY I (UNITED STATES)  = 2

PORT DEVICE ADR T   PORT DEVICE ADR T   PORT DEVICE ADR T   PORT DEVICE ADR T
00  3278... 01F 1   01  XXXXXXX XXX X   02  XXXXXXX XXX X   03  XXXXXXX XXX X
            ...         ....... ... .       ....... ... .       ....... ... .

04  XXXXXXX XXX X   05  XXXXXXX XXX X   06  XXXXXXX XXX X   07  XXXXXXX XXX X
    ....... ... .       ....... ... .       ....... ... .       ....... ... .

08  XXXXXXX XXX X   09  XXXXXXX XXX X   10  XXXXXXX XXX X   11  XXXXXXX XXX X
    ....... ... .       ....... ... .       ....... ... .       ....... ... .

12  XXXXXXX XXX X   13  XXXXXXX XXX X   14  XXXXXXX XXX X   15  XXXXXXX XXX X
    ....... ... .       ....... ... .       ....... ... .       ....... ... .

                         370 TIMER:ON   DISK         DATA:        ADDR:
                         TOD:SEC

0700
```

NOTE: IF 8 PORTS ARE AVAILABLE ONLY, THE MESSAGE: 'ONLY 8 PORTS EFFECTIVE' WILL APPEAR ON SCREEN ON LINE 3.

ERROR MESSAGES:

'INVALID CHARACTER' ----------

'INVALID DEVICE NAME' ---------- YOU CAN ONLY ATTACH THE DEVICES SHOWN AT TOP OF THE SCREEN

'INVALID DEVICE ADDRESS' ---------- SEE 'DEVICE ADDRESS RANGE' ON THE SCREEN

'INVALID CONFIGURATION' ---------- 3278-2A/3279-2C ONLY ON PORT 0. NO MORE THAN TWO 3289's ALLOWED.

'INVALID KEYBOARD LANGUAGE' ------- ONLY 1 OR 2 ALLOWED FOR 'T.' MUST BE ENTERED DISPLAYS AND 3287.

'DUPLICATE DEVICE ADDRESS' -------- THIS ADDRESS IS ALREADY USED BY ANOTHER DEVICE

'DUPLICATE DISKETTE ADDRESS' ------ THIS ADDRESS IS ALREADY USED BY THE CUSTOMER I/O DISKETTE (SEE STM 6126)

CONFIGURE CUSTOMER DISKETTE

THE CUSTOMER DISKETTE ADDRESS LABELS ARE INSTALLED ON THE TOP COVER OF THE 4331 (SEE ILLUSTRATION BELOW). LABELS ARE PROVIDED WITH THE 4331 SHIP GROUP. THESE ADDRESS LABELS SHOULD MATCH THE ADDRESS CONFIGURED WITH THIS SCREEN.

CONFIGURE PROCEDURE

1. DISPLAY THE 'DISKETTE DEVICE ADDRESS' SCREEN
   A. MOD SEL TO GET THE 'MODE SELECTION' SCREEN.
   B. SELECT 'DISKETTE DEVICE ADDRESS.'

2. IF THE DISPLAYED ADDRESS IS CORRECT, ACCORDING TO THE 'SYSTEM CHART', GO TO STEP 4.

3. ENTER THE DESIRED ADDRESS AND HIT ENTER. WAIT FOR THE MESSAGE: 'UPDATE COMPLETE, PRESS IML.' *** DO NOT IML *** THIS IS A CUSTOMER MESSAGE. IML AFTER ALL CONFIGURE ACTIONS ARE COMPLETED.

   THE NEW DISKETTE ADDRESS IS NOW DISPLAYED ON THE SCREEN.

4. ALT KEY AND MOD SELECT WILL RETURN YOU TO THE MAINTENANCE SELECTION SCREEN.

THE CUSTOMER DISKETTE CONFIGURATION IS COMPLETE

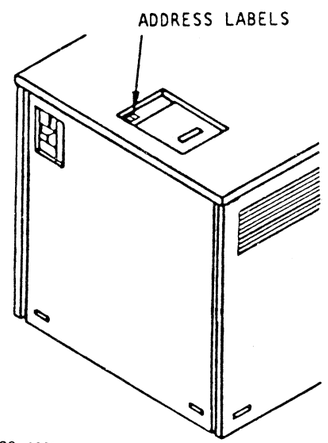


```
+-------------------------------------------------------------------------+
|                        *DISKETTE DEVICE ADDRESS*                        |
|                   DEVICE ADDRESS RANGE: X'009' - X'01F'                 |
|                                                                         |
|                                                                         |
|                                                                         |
|                 DEVICE ADDRESS:   00A                                   |
|                                 *     *                                 |
|                                                                         |
|                                                                         |
|                                                                         |
|                                                                         |
|                                                                         |
|                 16MB VSE TIMER:OFF  DISK        DATA:        ADDR:      |
|                      TOD:SEC                                            |
| 0700                                                                    |
+-------------------------------------------------------------------------+
```

ERROR MESSAGES

'DUPLICATE DEVICE ADDRESS' --- YOU CANNOT ASSIGN AN ADDRESS ALREADY USED BY A NATIVE DISPLAY OR PRINTER (SEE STM 6124)

'INVALID DEVICE ADDRESS' --- ADDRESS IS OUTSIDE OF X'009' TO X'01F' RANGE, OR YOUR ENTRY IS ONLY ONE OR TWO DIGITS.

CONFIGURE FTA 1 OR 3 - (DISK)

DISK ADDRESSES ARE USUALLY CONFIGURED IN PAIRS. IN OTHER WORDS, ONLY ONE ENTRY IS NECESSARY TO INSTALL DEVICE ADDRESSES '210' AND '211.' HOWEVER, SOME DISKS CAN HAVE JUST ONE DEVICE. THE LAST DIGIT (1 OR 2) OF DISK ENTRIES, INDICATES 1 OR 2 ADDRESSES USED.

CONFIGURE PROCEDURE

1. DISPLAY THE FTA 1 OR 3 CONFIGURE SCREEN.
   A. ALT KEY WITH MOD SEL TO GET MAINTENANCE SELECTION SCREEN.
   B. SELECT UTILITIES/REMOTE
   C. SELECT FTA CONFIGURATOR
   D. SELECT FTA1 OR FTA3

2. THE CHART ON THIS PAGE SHOWS A TYPICAL FTA 1 CONFIGURATION BLOCK.

3. THE 'SYSTEM CHART' (STM - 6019) DEFINES THE FTA ADDRESSES USED BY YOUR SYSTEM. FOR DISKS ON THE FTA, THE 3 DIGIT 'DEVICE' ADDRESS IS BROKEN DOWN IN THE FOLLOWING EXAMPLE FOR 3340 ADDRESS '210.'

   2 = CHANNEL ADDRESS AS SHOWN AT THE TOP OF THE SCREEN.
   1 = CONTROL ADDRESS AS SHOWN AT THE LEFT OF THE SCREEN.
   0 = DEVICE ADDRESS AS SHOWN ABOVE THE ENTRY AREA OF THE SCREEN.

4. IF THE DISPLAYED INFORMATION MATCHES THE 'SYSTEM CHART', GO TO STEP 9.

5. TO CHANGE DISK ADDRESSES ON FTA

   TO REMOVE ENTRIES:

   FIND THE FIRST '33XX-XX' ENTRY IN EACH ROW THAT IS NOT USED BY YOUR SYSTEM. CHANGE THESE ENTRIES FROM '33XX-XX' TO 'R3XX-XX', TO ERASE THE REST OF THE STRING.

   TO ADD ENTRIES:

   CHANGE '.....' TO '33XX-X2' FOR EACH PAIR OF DEVICE ADDRESSES, OR '33XX-X1' FOR A SINGLE ADDRESS.

6. IF STRING SWITCH IS INSTALLED ON ANY CONTROL UNIT, CHANGE THE 'N' TO A 'Y' IN THE STRING SWITCH COLUMN.

7. HIT ENTER. THE SCREEN SHOULD NOW SHOW THE DEVICES FOR YOUR SYSTEM. IF AN ERROR MESSAGE IS DISPLAYED, CORRECT IT AND HIT ENTER AGAIN.

   AN ERROR MESSAGE SUMMARY FOR FTA IS ON PAGE 6138.

8. YOU MUST NOW ANSWER A QUESTION. -- STORE Y/N --
   IF THE SCREEN IS CORRECT, ENTER 'Y' AND WAIT FOR THE DATA TO BE WRITTEN ON THE DISKETTE. IF THE SCREEN IS NOT CORRECT, ENTER 'N', AND GO BACK TO STEP 1 D.

9. ALT KEY AND MODE SEL WILL RETURN YOU TO THE MAINTENANCE SELECTION SCREEN.

THE FTA 1 (DISK) CONFIGURE ACTION IS COMPLETE

EXAMPLE OF A TYPICAL FTA 1 CONFIGURATION

```
                CONFIGURATION BLOCK FOR FTA1, CHANNEL ADDRESS 2

CONTROL     STRING
ADDRESS     SWITCH      DEVICE ADDRESS/TYPE WITHIN STRING
             (Y/N)      0          2          4          6
   0          .         .......    .......    .......    .......
   1          N         3340-A2    3340-B2    3340-B2    3340-B2
   2          .         .......    .......    .......    .......
   3          N         3370-A1    3370-B1    3370-B1    3370-B1
   4          N         3310-A1    .......    .......    .......
   5          N         3310-A2    3310-B2    .......    .......
   6          .         .......    .......    .......    .......
   7          .         .......    .......    .......    .......


VALID DEVICE NAMES ARE:
   3310-A2  3310-B2  3340-A2  3340-B2  3344-B2  3370-A1  3370-B1
   3310-A1  3310-B1           3340-B1
   R .... ERASE REST OF STRING

                      1MB VSE TIMER:OFF  DISK        DATA:       ADDR:
                          TOD:SEC


 0700
```

THIS EXAMPLE SHOWS:

3340'S USING ADDRESSES 210 THRU 217
3370'S USING ADDRESSES 230 THRU 237
3310 USING ADDRESS 240
3310'S USING ADDRESSES 250 THRU 253

4 STRINGS ON THIS FTA, WHICH IS THE MAXIMUM ALLOWED.

CONFIGURE FTA 2 - (8809)

CAUTION: THE 8809 ADDRESSES DIFFER FROM ANY OTHER DEVICE. THE DEVICE AND CONTROLLER ADDRESSES ARE REVERSED.

EACH 8809 ON THE FTA HAS A SEPARATE CONTROL UNIT. AN 8809 IS ADDRESSED BY ADDRESSING THE CONTROL UNIT FOR THAT 8809.

CONFIGURE PROCEDURE

1. DISPLAY THE FTA 2 CONFIGURE SCREEN.
   A. ALT KEY WITH MOD SEL TO GET THE MAINTENANCE SELECTION SCREEN.
   B. SELECT UTILITIES/REMOTE.
   C. SELECT FTA CONFIGURATOR.
   D. SELECT FTA2.

2. THE CHART ON THIS PAGE SHOWS A TYPICAL FTA 2 CONFIGURE BLOCK.

3. THE 'SYSTEM CHART' (STM - 6019) DEFINES THE FTA 2 ADDRESSES USED BY YOUR SYSTEM. FOR 8809'S ON THE FTA, THE 3 DIGIT 'DEVICE' ADDRESS IS BROKEN DOWN IN THE FOLLOWING EXAMPLE FOR 8809 ADDRESS '301.'

   3 = CHANNEL ADDRESS AS SHOWN AT THE TOP OF THE SCREEN.
   0 = DEVICE ADDRESS AS SHOWN ABOVE THE ENTRY AREA OF THE SCREEN.
   1 = CONTROL ADDRESS AS SHOWN AT THE LEFT OF THE SCREEN.

4. IF THE DISPLAYED INFORMATION MATCHES THE 'SYSTEM CHART', GO TO STEP 9.

5. CHANGE ADDRESSES ON FTA 2. (8809)

   NOTE: 8809 ADDRESSES MUST START WITH 300 AND CONTINUE IN ORDER (THAT IS 300, 301, 302, etc.)

   ONLY THE 1ST COLUMN IS USED AND THE 1ST ENTRY MUST BE ON THE 1ST LINE.

   TO REMOVE ENTRIES:

   FIND THE '8809' ENTRIES NOT USED BY YOUR SYSTEM AND CHANGE THEM ALL FROM '8809' TO 'R809'

   TO ADD ENTRIES:

   ALTER '.....' ENTRIES TO '8809...'

6. STRING SWITCH IS NOT USED FOR 8809'S. ENTERING A 'Y' IN THE STRING SWITCH COLUMN WILL GIVE AN ERROR MSG.

7. HIT ENTER. THE SCREEN SHOULD NOW SHOW THE DEVICES FOR YOUR SYSTEM. IF AN ERROR MESSAGE IS DISPLAYED, CORRECT IT AND HIT ENTER AGAIN.

   ERROR MESSAGE SUMMARY FOR FTA IS ON PAGE 6138.

8. YOU MUST NOW ANSWER A QUESTION. -- STORE Y/N -- IF THE SCREEN IS CORRECT, ENTER 'Y' AND WAIT FOR THE DATA TO BE WRITTEN ON THE DISKETTE. IF THE SCREEN IS NOT CORRECT, ENTER 'N', AND GO BACK TO STEP 1 D.

9. ALT KEY AND MOD SEL WILL RETURN YOU TO THE MAINTENANCE SELECTION SCREEN.

THE FTA 2 (8809) CONFIGURE ACTION IS COMPLETE

EXAMPLE OF A TYPICAL FTA 2 CONFIGURATION

```
+-----------------------------------------------------------------------------+
|                CONFIGURATION BLOCK FOR FTA2, CHANNEL ADDRESS 3              |
|                                                                             |
|  CONTROL     STRING                                                         |
|  ADDRESS     SWITCH     DEVICE ADDRESS/TYPE WITHIN STRING                   |
|               (Y/N)     0            2            4            6             |
|    0          N         8809         .......      .......      .......       |
|    1          N         8809         .......      .......      .......       |
|    2          .         .......      .......      .......      .......       |
|    3          .         .......      .......      .......      .......       |
|    4          .         .......      .......      .......      .......       |
|    5          .         .......      .......      .......      .......       |
|    6          .         .......      .......      .......      .......       |
|    7          .         .......      .......      .......      .......       |
|                                                                             |
|  VALID DEVICE NAMES ARE:                                                    |
|                                                                             |
|    8809                                                                     |
|    R .... ERASE REST OF STRING                                              |
|                                                                             |
|                        1MB VSE TIMER:OFF  DISK        DATA:       ADDR:    |
|                            TOD:SEC                                          |
|                                                                             |
| 0700                                                                        |
+-----------------------------------------------------------------------------+
```

THIS EXAMPLE SHOWS:

8809'S USING ADDRESSES 300 AND 301.

8809 ADDRESSING MUST ALWAYS START WITH X00, AND CONTINUE IN SEQUENCE.

FTA CONFIGURE ERROR MESSAGES

'XXX' NOT INSTALLED ERRORS

'FTA1 NOT INSTALLED' ----------
'FTA2 NOT INSTALLED' ----------
'FTA3 NOT INSTALLED' ----------
'DEVICE TYPE NOT INSTALLED' ----------
'STRNG SW. FEATURE NOT INSTALLED' ------

MEANS THAT THE FEATURE B/M IS NOT INSTALLED ON THE DISKETTE. FOR FEATURE B/M NUMBERS SEE PAGE PA015 IN VOL.30.

INVALID ENTRIES OR DATA ERRORS

'COPY THE CONFIGURATOR' ----------	YOU MUST COPY CONFIGURE FROM A GOOD DISKETTE. THE CONFIGURATION DATA ON YOUR DISKETTE IS INVALID
'INVALID CHARACTER' ----------	CURSOR POINTS TO INCORRECT AREA
'INVALID ENTRY' ----------	CURSOR POINTS TO INCORRECT AREA
'NO VALID FTA SPECIFIED' ----------	CURSOR POINTS TO INCORRECT AREA
'CONTROL ADDRESS IS INVALID' ----------	CURSOR POINTS TO INCORRECT AREA
'INVALID DEVICE TYPE' ----------	CURSOR POINTS TO INCORRECT AREA
'DEVICE PATTERN INCORRECT' ----------	CURSOR POINTS TO INCORRECT AREA
'INVALID OR MISSING STORE COMMAND' -----	'Y' OR 'N' NOT ENTERED TO ANSWER 'STORE Y/N.'

FEATURE DEPENDANT ERRORS

'A-BOX MUST BE DEFINED' ----------	XXXX-AX MUST BE DEFINED SOMEWHERE IN THE STRING.
'ONLY ONE A-BOX PER STRING' ----------	
'A1 BOX=NO B BOX. A2=ONLY 1 B BOX' -----	FOR 3310 - NO B BOX ALLOWED IF A1 BOX SPECIFIED. ONLY 1 B BOX ALLOWED IF A2 BOX SPECIFIED.
'STRING SWITCH NOT ALLOWED' ----------	STRING SWITCH CANNOT BE USED WITH THIS DEVICE/CONTROLLER TYPE
'3340 CONTROL ADDR MUST BE 0 OR 1' -----	
'MAX 4 DISK STRINGS ALLOWED' ----------	ONLY 4 CONTROL ADDRESSES ALLOWED
'8809 MUST BE EXCLUSIV ON FTA' ---------	NO DISK ALLOWED ON FTA WITH 8809
'8809: MAX. DEVICE NUMBER = 6' ---------	
'8809 STRING MUST BE CONTINUOUS' -------	
'8809 STRING MUST START WITH ZERO' -----	

CONFIGURE HSC SUBCHANNELS

SUBCHANNELS ARE INSTALLED OR REMOVED IN GROUPS OF 8 ADDRESSES. THESE ADDRESS RANGES ARE SHOWN ON THE 'FROM' AND 'TO' LINES AT THE TOP SCREEN.

EACH SUBCHANNEL GROUP CAN BE SPECIFIED AS UNSHARED OR SHARED SUBCHANNEL ON THE HSC.

A SEPARATE SCREEN IS PROVIDED FOR SUBCHANNELS WITH ADDRESS 00 TO 7F AND 80 TO FF.

SHARED SUBCHANNELS CAN BE SELECTOR MODE OR NOT SELECTOR MODE (BLOCK MODE). THE LINE 'SELECTOR MODE' ALLOWS THE SETTING OF THIS OPTION.

CONFIGURE PROCEDURE

1. DISPLAY THE HSC CONFIGURE SCREEN
   A. ALT KEY WITH MOD SEL TO GET THE MAINTENANCE SELECTION SCREEN
   B. SELECT 'UTILITIES/REMOTE'
   C. SELECT 'HSC CONFIGURATOR'

2. THE HSC CONFIGURATION BLOCK FOR SUBCHANNELS WITH ADDRESS 00 TO 7F SHOULD BE ON THE SCREEN.

SPECIFY THE FOLLOWING FOR EACH SUBCHANNEL:

3. *** INSTALLED ***

   USING THE 'SYSTEM CHART' ON STM 6019 AS A GUIDE, PUT A 'Y' UNDER ANY ADDRESS RANGE THAT INCLUDES AN ADDRESS USED BY YOUR SYSTEM. A'N' SHOULD BE ENTERED UNDER ALL OTHER ADDRESS RANGES.

4. *** UNSHARED ***

   ENTER A 'Y' IN THIS LINE IF THIS ADDRESS GROUP SHOULD FUNCTION AS UNSHARED SUBCHANNEL. ENTER A 'N' IF IT SHOULD FUNCTION AS A SHARED SUBCHANNEL.

5. *** BEGIN/FOLLOW ***

   ENTER A 'B' IF THE ADDRESS RANGE IS INSTALLED, AND THE CONTROLLER FOR THAT RANGE WILL USE ONLY ADDRESSES WITHIN THAT RANGE OF 8 ADDRESSES.

   A CONTROLLER SUCH AS A 3803 CAN USE 32 ADDRESSES (4 RANGES OF 8). IN THIS CASE, A 'B' IS ENTERED UNDER THE FIRST RANGE OF 8 ADDRESSES IN THE GROUP OF 32 ADDRESSES. AN 'F' IS ENTERED UNDER THE 2ND, 3RD AND 4TH ADDRESS RANGES IN THE 32 ADDRESS GROUP. THIS WILL 'CONNECT' THE FOUR RANGES OF 8 ADDRESSES INTO A RANGE OR GROUP OF 32 ADDRESSES TO BE USED BY THE 3803.

jm

6. *** SELECTOR MODE ***

   THIS BIT IS NORMALLY ON. IT IS SOMETIMES TURNED OFF TO OPTIMIZE SYSTEM OPERATION. YOU SHOULD CONSULT SUPPORT FACILITIES FOR THESE CONDITIONS.

7. *** DATA STREAMING MODE ***

   FOR CONTROL UNITS SUCH AS THE 3880 THAT ARE CAPABLE OF DATA STREAMING MODE IT IS ESSENTIAL TO:

   1. MAKE SURE THE CONTROL UNIT IS INTERNALLY SWITCHED TO DATA STREAMING MODE
   2. SET THIS BIT TO 'Y' FOR THE SUBCHANNELS CONCERNED. NEVER SET 'Y' FOR CONTROL UNITS <u>NOT</u> CAPABLE OF DATA STREAMING MODE.

8. HIT ENTER. IF THERE ARE NO ERRORS THE SCREEN FOR THE SUBCHANNELS 80 TO FF IS DISPLAYED. ERROR MESSAGES ARE SHOWN BELOW THE SCREEN PICTURE. CORRECT THE ERRORS THEN CONTINUE TO CONFIGURE ADDRESSES 80 TO FF.

9. HIT ENTER. IF THERE ARE NO ERRORS A THIRD PICTURE IS DISPLAYED. ANSWER THE TWO QUESTIONS WITH Y OR N.

   'SET 4 MICROSECS SELECT-OUT DOWN'

   NORMALLY ANSWERED WITH 'N', ANSWER WITH 'Y' IF TIMING PROBLEMS ARE ENCOUNTERED WITH LOW SPEED CONTROL UNITS, FOR EXAMPLE : 2821.

   'START OUTBOUND WITH FULL BUFFER ONLY'

   MUST BE ANSWERED WITH 'N'. ANSWER 'Y' IS USED FOR FACTORY TEST CASES ONLY.

10. HIT ENTER. YOU MUST NOW ANSWER THE QUESTION --STORE Y/N--. IF A 'Y' IS ENTERED, WAIT FOR THE DISKETTE TO BE WRITTEN AND GO TO STEP 10. IF AN 'N' IS ENTERED, GO BACK TO STEP 2 TO MAKE ANY NECESSARY CORRECTIONS.

11. ALT KEY AND MODE SEL WILL RETURN YOU TO THE MAINTENANCE SELECTION SCREEN.

THE HSC CONFIGURE ACTION IS COMPLETE.

CONFIGURE HSC SUBCHANNEL

```
+-------------------------------------------------------------------------------------------------------+
|                                HSC  CONFIGURATION BLOCK, CHANNEL ADDRESS 6                            |
|                                                                                                       |
| ADDRESS | FROM: 00  08  10  18  20  28  30  38  40  48  50  58  60  68  70  78                          |
|  RANGE  |   TO: 07  0F  17  1F  27  2F  37  3F  47  4F  57  5F  67  6F  77  7F                          |
|                                                                                                       |
| INSTALLED          Y   N   N   N   Y   Y   Y   Y   Y   Y   Y   Y   Y   Y   N   N                        |
| ENTER: Y/N         .   .   .   .   .   .   .   .   .   .   .   .   .   .   .   .                        |
|                                                                                                       |
| UNSHARED           Y   .   .   .   Y   Y   Y   Y   Y   Y   Y   Y   Y   Y   .   .                        |
| ENTER: Y/N         .   .   .   .   .   .   .   .   .   .   .   .   .   .   .   .                        |
|                                                                                                       |
| BEGIN/FOLLOW       .   .   .   .   .   .   .   .   .   .   .   .   .   .   .   .                        |
| ENTER: B/F         .   .   .   .   .   .   .   .   .   .   .   .   .   .   .   .                        |
|                                                                                                       |
| SELECTOR MODE      N   .   .   .   N   N   N   N   N   N   N   N   N   N   .   .                        |
| ENTER: Y/N         .   .   .   .   .   .   .   .   .   .   .   .   .   .   .   .                        |
|                                                                                                       |
| DATA-STREAMNG MD   N   .   .   .   N   N   N   N   N   N   Y   Y   N   N   .   .                        |
| ENTER: Y/N         .   .   .   .   .   .   .   .   .   .   .   .   .   .   .   .                        |
|                                                                                                       |
|                                370 TIMER: ON   DISK        DATA:        ADDR:                         |
|                                TOD: SEC                                                               |
|                                                                                                       |
| 0700                                                                                                  |
+-------------------------------------------------------------------------------------------------------+
```

```
+-------------------------------------------------------------------------------------------------------+
|                                HSC  CONFIGURATION BLOCK, CHANNEL ADDRESS 6                            |
|                                                                                                       |
| ADDRESS | FROM: 80  88  90  98  A0  A8  B0  B8  C0  C8  D0  D8  E0  E8  F0  F8                          |
|  RANGE  |   TO: 87  8F  97  9F  A7  AF  B7  BF  C7  CF  D7  DF  E7  EF  F7  FF                          |
|                                                                                                       |
| INSTALLED          N   N   Y   Y   Y   Y   N   N   N   N   N   N   N   N   N   N                        |
| ENTER: Y/N         .   .   .   .   .   .   .   .   .   .   .   .   .   .   .   .                        |
|                                                                                                       |
| UNSHARED           .   .   N   N   N   N   .   .   .   .   .   .   .   .   .   .                        |
| ENTER: Y/N         .   .   .   .   .   .   .   .   .   .   .   .   .   .   .   .                        |
|                                                                                                       |
| BEGIN/FOLLOW       .   .   B   F   B   F   .   .   .   .   .   .   .   .   .   .                        |
| ENTER: B/F         .   .   .   .   .   .   .   .   .   .   .   .   .   .   .   .                        |
|                                                                                                       |
| SELECTOR MODE      .   .   Y   Y   Y   Y   .   .   .   .   .   .   .   .   .   .                        |
| ENTER: Y/N         .   .   .   .   .   .   .   .   .   .   .   .   .   .   .   .                        |
|                                                                                                       |
| DATA-STREAMNG MD   .   .   N   N   N   N   .   .   .   .   .   .   .   .   .   .                        |
| ENTER: Y/N         .   .   .   .   .   .   .   .   .   .   .   .   .   .   .   .                        |
|                                                                                                       |
|                                370 TIMER: ON   DISK        DATA:        ADDR:                         |
|                                TOD: SEC                                                               |
|                                                                                                       |
| 0700                                                                                                  |
+-------------------------------------------------------------------------------------------------------+
```

```
+-------------------------------------------------------------------------------------------------------+
|                                HSC  CONFIGURATION BLOCK, CHANNEL ADDRESS 6                            |
|                                                                                                       |
|                                                                                                       |
|                                                                                                       |
|                                                                                                       |
| SET "4 MICROSEC"S SELECT-OUT DOWN"   N                                                                |
| ENTER: Y/N                           .                                                                |
| START OUTBOUND WITH FULL BUFFER ONLY N                                                                |
| ENTER: Y/N                           .                                                                |
|                                                                                                       |
|                                                                                                       |
|                                370 TIMER: ON   DISK        DATA:        ADDR:                         |
|                                TOD: SEC                                                               |
| 0700                                                                                                  |
+-------------------------------------------------------------------------------------------------------+
```

DEVICES FOR SHARED/UNSHARED SUBCHANNELS

FOR INFORMATION ON WHICH I/O DEVICES REQUIRE A SHARED/UNSHARED SUBCHANNEL REFER TO THE COMPONENT DESCRIPTION OF THE I/O DEVICE.

HSC CONFIGURATION BLOCK ERRORS

'INVALID OR MISSING STORE COMMAND' -------	'Y' OR 'N' NOT ENTERED TO ANSWER 'STORE Y/N.'
'NO VALID HSC SPECIFIED' ----------	
'HSC NOT INSTALLED' ----------	MEANS THAT THE FEATURE B/M IS NOT INSTALLED ON THE DISKETTE. FOR FEATURE B/M NUMBERS SEE PAGE PA015 IN VOL. 30.
'SPECIFY BEGIN' ----------	NO 'B' SPECIFIED FOR 1ST ADDRESS RANGE.

CONFIGURE BMPX SUBCHANNELS

SUBCHANNELS ARE INSTALLED OR REMOVED IN GROUPS OF 8 ADDRESSES. THESE ADDRESS RANGES ARE SHOWN ON THE 'FROM' AND 'TO' LINES AT THE TOP SCREEN.

EACH SUCHANNEL GROUP CAN BE SPECIFIED AS SHARED OR UNSHARED SUBCHANNEL. A SEPARATE SCREEN IS PROVIDED FOR ADDRESS RANGES 00 TO 7F and 80 TO FF.

SHARED SUBCHANNELS CAN BE SELECTOR MODE OR NOT SELECTOR MODE (BLOCK MODE). THE BMPX CONFIGURE SCREEN ALLOWS THE SETTING OF THIS OPTION.

CONFIGURE PROCEDURE

1. DISPLAY THE BMPX CONFIGURE SCREEN
   A. ALT KEY WITH MOD SEL TO GET THE MAINTENANCE SELECTION SCREEN
   B. SELECT 'UTILITIES/REMOTE'
   C. SELECT 'BMPX CONFIGURATOR'
   D. SELECT APPROPRIATE BMPX (1 OR 2)

2. THE BMPX CONFIGURATION BLOCK FOR ADDRESS RANGE 00 TO 7F SHOULD BE ON THE SCREEN.

3. *** INSTALLED ***

   USING THE 'SYSTEM CHART' ON STM 6019 AS A GUIDE, PUT A 'Y' UNDER ANY ADDRESS RANGE THAT INCLUDES AN ADDRESS USED BY YOUR SYSTEM. A'N' SHOULD BE ENTERED UNDER ALL OTHER ADDRESS RANGES.

4. *** UNSHARED ***

   ENTER A 'Y' IN THIS LINE IF THIS ADDRESS GROUP SHOULD FUNCTION AS UNSHARED SUBCHANNEL. ENTER A 'N' IF IT SHOULD FUNCTION AS A SHARED SUBCHANNEL.
   IF A SHARED SUBCHANNEL IS SPECIFIED THREE ADDITIONAL LINES OF CONFIGURE INFORMATION ARE AVAILABLE.
   EACH OF THE 3 LINES IS MENTIONED SEPARATELY.

5. *** BEGIN/FOLLOW ***

   ENTER A 'B' IF THE ADDRESS RANGE IS INSTALLED, AND THE CONTROLLER FOR THAT RANGE WILL USE ONLY ADDRESSES WITHIN THAT RANGE OF 8 ADDRESSES.
   A CONTROLLER SUCH AS A 3272 CAN USE 32 ADDRESSES (4 RANGES OF 8). IN THIS CASE, A 'B' IS ENTERED UNDER THE FIRST RANGE OF 8 ADDRESSES IN THE GROUP OF 32 ADDRESSES. AN 'F' IS ENTERED UNDER THE 2ND, 3RD AND 4TH ADDRESS RANGES IN THE 32 ADDRESS GROUP. THIS WILL 'CONNECT' THE FOUR RANGES OF 8 ADDRESSES INTO A RANGE OR GROUP OF 32 ADDRESSES TO BE USED BY THE 3272.

6. *** SELECTOR MODE ***

   THIS BIT IS NORMALLY ON. IT IS SOMETIMES TURNED OFF TO OPTIMIZE SYSTEM OPERATION. YOU SHOULD CONSULT SUPPORT FACILITIES FOR THESE CONDITIONS.

7. *** 231X ATTACHED ***

   'ATTACHED' MEANS THAT A 2311 OR 2314 DEVICE IS ATTACHED TO THE BMPX. IT DOES NOT MEAN 231X EMULATOR. THE 231X EMULATOR IS ON THE FTA.
   IF THERE IS A 'Y' ON THIS LINE, THE 'SELECTOR MODE' LINE WILL AUTOMATICALLY BE SET TO A 'Y' FOR THAT ADDRESS RANGE.

8. HIT ENTER. IF THERE ARE NO ERRORS THE SECOND CONFIGURE SCREEN FOR THE ADDRESSES 80 TO FF IS DISPLAYED. ERROR MESSAGES ARE SHOWN BELOW THE SCREEN PICTURES. CORRECT THE ERRORS TO CONTINUE TO CONFIGURE THE SUBCHANNELS 80 TO FF IN THE SAME WAY.

9. HIT ENTER. YOU MUST NOW ANSWER THE QUESTION --STORE Y/N--. IF A 'Y' IS ENTERED, WAIT FOR THE DISKETTE TO BE WRITTEN AND GO TO STEP 10. IF AN 'N' IS ENTERED, GO BACK TO STEP 2 TO MAKE ANY NECESSARY CORRECTIONS.

10. ALT KEY AND MODE SEL WILL RETURN YOU TO THE MAINTENANCE SELECTION SCREEN.

THE BMPX CONFIGURE ACTION IS COMPLETE.

CONFIGURE BMPX SUBCHANNELS

BMPX1 CONFIGURATION BLOCK, CHANNEL ADDRESS 1

ADDRESS RANGE FROM:	00	08	10	18	20	28	30	38	40	48	50	58	60	68	70	78
ADDRESS RANGE TO:	07	0F	17	1F	27	2F	37	3F	47	4F	57	5F	67	6F	77	7F
INSTALLED ENTER: Y/N	Y	Y	N	N	Y	Y	Y	Y	N	N	N	N	N	N	N	N
UNSHARED ENTER: Y/N	N	N	.	.	Y	Y	Y	Y	.	.	.	.	.	.	.	.
BEGIN/FOLLOW ENTER: B/F	B	F	.	.	.	.	.	.	.	.	.	.	.	.	.	.
SELECTOR MODE ENTER: Y/N	Y	Y	.	.	N	N	N	N	.	.	.	.	.	.	.	.
231X ATTACHED ENTER: Y/N	N	N	.	.	N	N	N	N	.	.	.	.	.	.	.	.

370 TIMER:ON DISK DATA: ADDR:
TOD: SEC

0700

BMPX1 CONFIGURATION BLOCK, CHANNEL ADDRESS 1

ADDRESS RANGE FROM:	80	88	90	98	A0	A8	B0	B8	C0	C8	D0	D8	E0	E8	F0	F8
ADDRESS RANGE TO:	87	8F	97	9F	A7	AF	B7	BF	C7	CF	D7	DF	E7	EF	F7	FF
INSTALLED ENTER: Y/N	Y	Y	N	N	Y	N	N	N	N	N	N	Y	N	N	N	N
UNSHARED ENTER: Y/N	N	N	.	.	N	.	.	.	.	.	.	Y	.	.	.	.
BEGIN/FOLLOW ENTER: B/F	B	F	.	.	B	.	.	.	.	.	.	.	.	.	.	.
SELECTOR MODE ENTER: Y/N	Y	Y	.	.	Y	.	.	.	.	.	.	N	.	.	.	.
231X ATTACHED ENTER: Y/N	N	N	.	.	N	.	.	.	.	.	.	N	.	.	.	.

370 TIMER:ON DISK DATA: ADDR:
TOD:SEC

0700

DEVICE TABLE FOR UNSHARED SUBCHANNELS (TYPICAL)

	DEVICE TYPE
2821-2540, -1403 2501, 2520 3211, 3203-5	READERS AND PRINTERS
3274-1A CONTROL UNIT	DISPLAYS

DEVICE TABLE FOR SHARED SUBCHANNELS (TYPICAL)

	DEVICE TYPE	SELECTOR MODE	231X
2841-2311 2314, 2319, 2312, 2313	DISKS	Y Y	*Y *Y
2415 2803-2401, 2402 3803-3420 3410, 3411	TAPES	Y Y Y Y	N N N N
2250-1 2840-2250-11 2848-2260 3272 CONTROL UNIT 3274 CONTROL UNIT	DISPLAYS	Y Y Y EITHER EITHER	N N N N N

* BMPX 1 ONLY AND NO HSC INSTALLED.

REFER TO DEVICE RESTRICTIONS (STM 6200).

BMPX CONFIGURATION BLOCK ERRORS

'INVALID OR MISSING STORE COMMAND' ------- 'Y' OR 'N' NOT ENTERED TO ANSWER 'STORE Y/N.'

'NO VALID BMPX SPECIFIED' ----------

'BMPX NOT INSTALLED' ---------- CHECK IF BMPX IS CONFIGURED, SEE MES UPDATE, PAGE 6190.

'SPECIFY BEGIN'---------- NO 'B' SPECIFIED FOR 1ST ADDRESS RANGE.

'231X NOT ALLOWED' ---------- 231x NOT ALLOWED IF HSC INSTALLED, OR IF BMPX2 REFER TO 'DEVICE RESTRICTIONS' ON PAGE 6200.

CONFIGURATION OF CA

CA ADDRESSES ARE ASSIGNED BY HARDWARE LOCATION. CONFIGURE FOR THE CA MEANS SETTING CERTAIN LINE OPTIONS DISPLAYED ON THE SCREEN.

THE DETAILED LINE DESCRIPTIONS SHOULD BE FILLED OUT IN THE CTM FEATURES CA SECTION, AND ON THE SYSTEM CHART ON STM 6018.

AN EXAMPLE OF THE CA CONFIGURE SCREEN IS SHOWN HERE FOR REFERENCE.

CONFIGURE PROCEDURE

1. DISPLAY THE CA CONFIGURATOR
   A. ALT KEY AND MOD SEL WILL GET THE MAINTENANCE SELECTION SCREEN.
   B. SELECT THE 'COMMUNICATION ADAPTER'
   C. SELECT THE 'UPDATE CONFIGURATION TABLE'

2. PF1 AND PF2 CONTROL POINTERS ON THE SCREEN.

   PF1 CONTROLS ===> AND MOVES IT FROM TOP TO BOTTOM OF THE SCREEN.

   PF2 CONTROLS => TO THE RIGHT OF THE PF1 POINTER, MOVING IT TO THE OTHER COLUMN EACH TIME PF2 IS DEPRESSED. THE POSITION OF THE => INDICATES THE PRESENT SETTING OF EACH OPTION THAT APPLIES TO THE LINE CURRENTLY DISPLAYED.

3. DETAILED INFORMATION ABOUT THE CA IS CONTAINED IN THE STM FEATURES, CA SECTION AND IN MAP 88FF.

GO TO MAP 88FF TO COMPLETE THE CA CONFIGURATION

```
+-------------------------------------------------------------------------------------+
|                          ***  CA CONFIGURATION DATA  ***                             |
|                                                                                     |
| PF1 - SELECT NEXT OPTION (===>)      PF4 - SELECT NEXT CA LINE ADDRESS              |
| PF2 - OPTION SWITCH (=>)             ENTER - UPDATE AND EXIT                        |
| PF3 - EXIT WITHOUT UPDATE                                                           |
|                                                                                     |
| LINE ADDRESS 32   BSC     BM CLOCK   EIA I/F                                  1820  |
|                                                                                     |
|  ===> SWITCHED NETWORK          YES   => NO                                         |
|       PERM REQUEST TO SEND      YES   => NO                                         |
|       WRAP TEST SELECTION       MODEM => CA I/F                                     |
|       SELECT STANDBY            YES   => NO                                         |
|       MODEM ANSWER TONE(HZ)     2025     2100                                       |
|       NEW SYNC                  YES   => NO                                         |
|       EIB MODE                  YES   => NO                                         |
|       DATA SIGNAL RATE SEL      LOW   => HIGH                                       |
|       HIGH SPEED OPERATION      YES      NO                                         |
|       MODEM PROCEDURE           CDSTL => DTR                                        |
|       DATA CODE                 ASCII => EBCDIC                                     |
|                                                                                     |
|                        2MB VSE TIMER:OFF                DATA:        ADDR:          |
|                            TOD:SEC                                                  |
|                                                                                     |
| 0700                                                                                |
+-------------------------------------------------------------------------------------+
```

Configuration of the Loop

The loop configuration falls into two parts, the loop and the terminal configuration. The loop part is already pre-configured. The terminal part is to be configured by the customer. However, the CE should also be familiar with the configure procedure to be able to give assistance to the customer if requested.
The figure on this page shows how to select the TERMINAL DISPLAY AND UPDATE and the LOOP DISPLAY AND UPDATE screen display.
For details how to configure these screens or to change the configuration refer to Section 6 of STM Features, Volume 15. Further information can be found in the following manuals:
IBM 4331 Multiuse Communication Loop Operating Procedures, No. GA33-1538
IBM 4331 Multiuse Communication Loop Functional Characteristics No. GA33-1534

The loop is configured by default with the values shown. The screen display in the figure shows the maximum configuration. The actual display shows only the loop(s) that are attached.

```
                    *MODE SELECTION*

P PROGRAM RESET                 D DISPLAY/ALTER
C CLEAR RESET                   L PROGRAM LOAD
S STORE STATUS                  A ADDRESS COMPARE
R RESTART                       K CHECK CONTROL
I INSTR STEP                    J INTERNAL TIMER
N RESET I-STEP                  M NATIVE DISPLAYS AND PRINTERS
Y TOD ENABLE                    G USER DISKETTE CONTROL
F LOOP ADAPTER                  H DISKETTE DEVICE ADDRESS
                                E COMMUNICATION LINES

            SELECTION:
MAN                 370 TIMER:ON      DATA: 0000   ADDR: 000000
                    TOD:SEC
                   LOOP MSG
```

F

```
LOOP ADAPTER CONFIGURATOR     SELECTION MENU
            A   TERMINAL PARAMETERS DISPLAY AND UPDATE
            B   LOOP     PARAMETERS DISPLAY AND UPDATE
            C   INLINE TESTS


            SELECTION:
   MAN                370 TIMER:ON      DATA: 0000   ADDR: 000000
                      TOD:SEC
                     LOOP MSG
```

A

B

```
LOOP ADAPTER CONFIGURATION     TERMINAL DISPLAY AND UPDATE    PAGE XXXX

DATA LINK 1   PORT ADDR: OA

STAT TERMINAL  SUB-  LU   TERM  STAT TERMINAL SUB- LU   TERM
ADDR         CHNL  ADDR  PARA  ADDR         CHNL ADDR PARA

 XX   XXXXXXXX  XX   XX    XX    XX  XXXXXXXX  XX X XX X XX
 ..   ........  ..   ..    ..    ..  ........  .. . .. . ..

 XX  XXXXXXXX   XX   XX    XX    XX  XXXXXXXX  XX X XX X XX
 ..  ........   ..   ..    ..    ..  ........  .. . .. . ..

 XX  XXXXXXXX   XX   XX    XX    XX  XXXXXXXX  XX X XX X XX
 ..  ........   ..   ..    ..    ..  ........  .. . .. . ..

 XX  XXXXXXXX   XX   XX    XX    XX  XXXXXXXX  XX X XX X XX
 ..  ........   ..   ..    ..    ..  ........  .. . .. . ..
 PRESS PF 1 KEY FOR BUFFER        DEC XXX DATA BUFFERS AVAILABLE
 STATISTICS                       *) See Note

            S   Y   S   T   E   M       A   R   E   A
```

```
LOOP ADAPTER CONFIGURATOR          LOOP DISPLAY AND UPDATE

PASSWORD: ____________ *           NUMBER LOOP MESSAGES: 0050

          LOBE 1  LOBE 2  PACING  NRZI  HALF   MODEM  PERM    POLL
          ACTIVE  ACTIVE  T/O           SPEED  WRAP   REQ TO  T/O
                                                       SEND    MASK

LOOP   1   Y       N     X 10
           -       -     X --

LOOP   2   Y       N     X 10
           -       -     X --

LINK 1                   X 10    Y     N     Y     Y     X 0A
                         X --    -     -     -     -     X --

LINK 2                   X 10    Y     N     Y     Y     X 0A
                         X --    -     -     -     -     X --

            S   Y   S   T   E   M       A   R   E   A
```

*) Note: The value is configuration dependent and shows how many data buffers are left.

This page has been
intentionally left blank

COPY CONFIGURE

COPY CONFIG PROCEDURES ARE PROVIDED SO THAT MANUAL CHANGES ARE MADE ON ONLY ONE DISKETTE. THE UNCHANGED AND NEW DATA CAN THEN BE COPIED TO ALL OTHER DISKETTES, ELIMINATING THE POSSIBILITY OF MANUAL DIFFERENCES BETWEEN DISKETTES.

THIS PROCEDURE IS CONTROLLED BY MAP FE90, AND THE 'COPY CONFIGURATOR' SELECTION FROM THE MAINTENANCE SELECTION SCREEN. THE MAP INTERPRETS THE STEPS DISPLAYED ON THE SCREEN, AND TELLS YOU WHICH DISKETTE TO INSERT FOR EACH STEP. IT ALSO DIRECTS THE TESTING OF THE DISKETTES AFTER THE DISKETTES HAVE BEEN WRITTEN.

COPY CONFIGURATION IS NECESSARY IN THE FOLLOWING CASES:

1. INSTALLATION OF A NEW SYSTEM
2. CHANGE CONFIG DATA ON ONE DISKETTE
3. NEW DIAGNOSTIC DISKETTE
4. EC INSTALLATION
5. EMERGENCY DISKETTES
6. MES WITH CONFIGURE CHANGE

CHARTS ON THE FOLLOWING PAGES DESCRIBE EACH OF THE POSSIBLE COPY CONFIGURATION PROCEDURES. THEY ARE FOR REFERENCE AND ARE NOT NEEDED TO DO THE COPY CONFIGURE.

COPY CONFIGURE PROCEDURE

1. DISPLAY THE COPY CONFIGURE SCREEN
   A. ALT KEY AND MOD SELECT TO GET THE MAINTENANCE SELECTION SCREEN.
   B. SELECT UTILITIES/REMOTE
   C. SELECT 'COPY CONFIGURATOR'

2. GO TO MAP FE90 AS INSTRUCTED BY THE SCREEN MESSAGE.

THE CONFIGURE PROCESS WILL BE COMPLETED BY FOLLOWING THE FE90 MAP.

```
+-----------------------------------------------------------------------------+
|  LV: 79269212                COPY SYSTEM CONFIGURATOR                       |
|                                                                             |
|        NEW CONTROL, OR ALL NEW....................: A   OC->C1->C2->D       |
|        NEW DIAGNOSTIC............................: B   C-->D               |
|        CHANGE ON CTL, OR INSTALLATION, OR MES-END.: D   C1->C2->D           |
|        MES-START..................................: G   OC->C1              |
|                                                                             |
|                       OPERATE AS INSTRUCTED BY MAP FE90                     |
|                                                                             |
|  SELECTION:                                                       STEP: 00  |
|                          370 TIMER:OFF  DISK        DATA:        ADDR:      |
|                          TOD:SEC                                            |
|                                                     ANSWER                  |
|  2051                                                                       |
+-----------------------------------------------------------------------------+
```

COPY CONFIGURE CHARTS

AT INSTALLATION, THE FIRST CONTROL DISKETTE IS CONFIGURED MANUALLY. THE NEW CONFIGURE INFORMATION IS COPIED TO THE OTHER DISKETTES WITH COPY CONFIGURE OPTION D.

AFTER INSTALLATION, THE 5 COPY CONFIGURE OPTIONS AND/OR MANUAL CONFIGURATION IS USED TO UPDATE THE SYSTEM CONFIGURE RECORD.

THERE ARE 14 VALID COMBINATIONS OF COPY OPTIONS, OLD AND NEW DISKETTES, AND MANUAL CONFIGURING THAT CAN BE USED TO UPDATE THE CONFIGURE DATA.

CHART 1 DESCRIBES ALL OF THE POSSIBLE REASONS FOR USING THE COPY CONFIGURE PROGRAM.

CHART 2 DESCRIBES THE 14 VALID COMBINATIONS OF COPY OPTIONS, OLD AND NEW DISKETTES, AND MANUAL CONFIGURING USED TO UPDATE THE CONFIGURE DATA.

HOW TO USE THE CONFIGURE CHARTS.

TO USE CHART 1, PICK A CONFIGURE ACTION THAT MATCHES WHAT YOU INTEND TO DO. FOR EXAMPLE:

ALL OF YOUR DISKETTES WERE DESTROYED, AND YOUR EMERGENCY ORDER GETS YOU A NEW DISKETTE SET, I. E. A NEW CONTROL (NC), A NEW BACK-UP (NB), AND A NEW DIAGNOSTIC (ND) DISKETTE.

THIS IS OBVIOUSLY AN EMERGENCY, SO LOOK IN THE EMERGENCY SECTION OF CHART 1 AND FIND THE LINE THAT SAYS:

1. NO OLD CONTROL AVAILABLE. (YOUR OLD ONES WERE DESTROYED)
2. NEW DISKETTES = NC NB ND

THE LAST COLUMN IN CHART 1 GIVES YOU THE ENTRY INTO CHART 2. CHART 2 INFORMATION WILL GUIDE YOU THROUGH THE COPY CONFIGURE ACTION BY TELLING YOU WHICH DISKETTE TO INSERT AT EACH STEP DURING THE COPY CONFIGURE.

THE EXAMPLE IS THE SAME ACTION THAT WOULD BE NECESSARY ON AN INSTALLATION, SINCE NO NEW DISKETTES ARE AVAILABLE AT INSTALLATION TIME. A LOOK AT THE INSTALL LINE ON CHART 1, SHOWS THAT PATH 6 IS ALSO USED FOR INSTALLATION.

CONFIGURE ACTION - CHART 1

CONFIGURATION ACTION	NEW DISKETTES	DISKETTES NEEDED FOR COPY ACTION	CHART 2 ENTRY
INSTALLATION OF NEW SYSTEM	NC NB ND	NC NB ND	6
CHANGE CONFIG DATA			
- CONFIG ON OLD DISK SET	NONE	OC OB OD	10
NEW DIAGNOSTIC DISKETTE	ND	OC ND	5
EC INSTALL - NOTE 1			
- COPY WITHOUT MANUAL UPDATE	NC NB ND	OC NC NB ND	1
- COPY WITHOUT MANUAL UPDATE	NC NB	OC NC NB OD	2
- COPY WITH MANUAL UPDATE	NC NB ND	OC NC NB ND	11
- COPY WITH MANUAL UPDATE	NC NB	OC NC NB OD	12
EMERGENCY DISKETTES			
- OLD CTRL AVAILABLE	NC NB ND	OC NC NB ND	1
- OLD CTRL AVAILABLE	NC NB	OC NC NB OD	2
- OLD CTRL AVAILABLE	NC ND	OC NC ND	3
- OLD CTRL AVAILABLE	NC	OC NC OD	4
- NO OLD CTRL DISK	NC NB ND	NC NB ND	6
- NO OLD CTRL DISK	NC NB	NC NB OD	7
- NO OLD CTRL DISK	NC ND	NC ND	8
- NO OLD CTRL DISK	NC	NC OD	9
MES WITH CONFIGURE CHANGE			
- WITH SOME NEW DISKETTES	NC NB ND	OC NC NB ND	11
- WITH SOME NEW DISKETTES	NC NB	OC NC NB OD	12
- WITH SOME NEW DISKETTES	NC ND	OC NC ND	13
- WITH A NEW DISKETTE	NC	OC NC OD	14
- WITH NO NEW DISKETTES	NO DISKS	OC OC OD	10

NOTE 1:
EC INSTRUCTIONS WILL INDICATE IF MANUAL UPDATE IS NEEDED.

KEY TO DISKETTE TYPE

	CTRL	BACK UP	DIAG
OLD	OC	OB	OD
NEW	NC	NB	ND

COPY CONFIGURE CHARTS (CONTINUED)

COPY CONFIGURE STEPS - CHART 2

CHART 2 ENTRY	COPY STEP/DISK	MANUAL/ DISK NOTE 2	COPY CONFIGURATION STEP AND CORRECT DISKETTE STEP/DISK
1			A1/OC A2/NC A3/NB A4/ND
2			A1/OC A2/NC A3/NB A4/OD
3			A1/OC A2/NC A3/NC A4/ND
4			A1/OC A2/NC A3/NC A4/OD
5			B1/OC B2/ND
6		M /NC	D1/NC D2/NB D3/ND
7		M /NC	D1/NC D2/NB D3/OD
8		M /NC	D1/NC D2/NC D3/ND (NOTE 1)
9		M /NC	D1/NC D2/NC D3/OD (NOTE 1)
10		M /OC	D1/OC D2/OB D3/OD
11	G1/OC G2/NC	M /NC	D1/NC D2/NB D3/ND
12	G1/OC G2/NC	M /NC	D1/NC D2/NB D3/OD
13	G1/OC G2/NC	M /NC	D1/NC D2/NC D3/ND (NOTE 1)
14	G1/OC G2/NC	M /NC	D1/NC D2/NC D3/OD (NOTE 1)

KEY TO DISKETTE TYPE

	CTRL	BACK UP	DIAG
OLD	OC	OB	OD
NEW	NC	NB	ND

NOTE 1:
ENTRY 8, 9, 13 AND 14 WILL NOT PRODUCE A CURRENT BACK-UP CONTROL DISKETTE. THIS SHOULD ONLY HAPPEN UNDER SPECIAL CIRCUMSTANCES, SINCE 2 CONTROL DISKETTES SHOULD BE FURNISHED IF THE OLD CONTROL DISKETTE CANNOT BE USED FOR BACK-UP.

NOTE 2:
THE 'M' IN THIS CHART REFERS TO ANY MANUAL KEYBOARD CONFIGURATION. EC OR MES OR INSTALL PROCEDURES WILL TELL YOU EXACTLY WHAT TO MANUALLY CONFIGURE. EACH SCREEN IS EXPLAINED IN DETAIL IN THIS STM SECTION. SEE THE TABLE OF CONTENTS FOR ANY PARTICULAR CONFIGURE SCREEN.

This page has been
intentionally left blank

MES UPDATE WITHOUT A NEW DISKETTE

FOR MES UPDATES WHICH REQUIRE ONLY A HW CONFIGURATOR UPDATE TO MATCH THE SYSTEM HARDWARE CONFIGURATION, NO NEW DISKETTES ARE SHIPPED. THE 'MES UPDATE' SCREEN IS USED TO MAKE THE NECESSARY CHANGES TO THE HARDWARE CONFIGURE RECORD.

CONFIGURE PROCEDURE

1. INSERT CONTROL DISKETTE AND DISPLAY THE MES UPDATE SCREEN
   A. ALT KEY AND MOD SEL TO GET THE MAINTENANCE SELECTION SCREEN.
   B. SELECT 'UTILITIES/REMOTE'
   C. SELECT 'MES UPDATE'

2. THREE SCREENS WILL APPEAR MOMENTARILY.

3. WAIT FOR THE MES UPDATE SCREEN TO BE DISPLAYED.

4. ALTER SCREEN AS DIRECTED BY THE MES INSTRUCTIONS.

   1) ADD OR DELETE FEATURES.

      IF CS TYPE 0 IS INSTALLED (2 QA5 CARDS) ENTER 'Y' BELOW 32 K FIELD.
      IF CS TYPE 1 IS INSTALLED (1QS2 CARD) ENTER Y BELOW 32K AND QS2 FIELD.

   2) INDICATE BSM CARD LOCATIONS.

      CARD LOCATION ENTRIES ARE IGNORED UNLESS A MEMORY SIZE IS INDICATED WITH A 'Y' in the PUT field under 1).

      THERE ARE 8 VALID COMBINATIONS OF BSM SIZE AND CARD LOCATION. THE CARD LOCATIONS PLUGGED IN YOUR BSM BOARD B1 MUST MATCH ONE OF THE COMBINATIONS SHOWN IN THE TABLE BELOW THE SCREEN PICTURE. ALL BSM CARDS ARE 512K PER CARD EXCEPT AS NOTED. SEE PLUGGING CHART IN VOL 30 FOR CARD PART NUMBERS.

   NOTE: IF MEMORY SIZE OR CARD LOCATIONS ARE CHANGED FOR DIAGNOSTIC PURPOSES, THIS SCREEN MUST BE USED TO MAKE THE MICROCODE MATCH THE NEW PHYSICAL CONFIGURATION OF THE BSM.

5. HIT ENTER TO WRITE THE CONFIGURE DATA ON THE DISKETTE.

   IF ERROR MESSAGE IS DISPLAYED, CHECK THE CHART BELOW THE SCREEN PICTURE FOR THE VALID BSM SIZE/CARD LOCATION ENTRIES.

6. IML THE SYSTEM. IML IS NECESSARY BECAUSE THE PU IS STOPPED TO DISPLAY THE MES UPDATE SCREEN.

THE MES UPDATE OF ONE DISKETTE IS COMPLETE


```
MES UPDATE:

1) PUT .=Y/N IF FEATURE INCOMING / OUTGOING
   CS: 16K 32K QS2  BSM: 1M 2M 3M 4M  NDSEXT:  SPI:  MPX:  BMPX1:  BMPX2:
IS:     .   Y   .        .  Y  .  .      Y      Y     Y      Y      N
PUT:    .   .   .        .  .  .  .      .      .     .      .      .

2) IF BSM IS AFFECTED:  PUT .=Y/N IF CARD IS IN/OUT ON LOCATIONS
                         B1- L2 M2 N2 P2 Q2 R2   T2 U2.
                       IS :  N  N  N  N  Y  N   Y  Y
INVALID, SEE STM **>  PUT:   .  .  .  .  .  .   .  .

3) ENTER.

                          370 TIMER:ON                DATA:        ADDR:
                          TOD:SEC
                                                       STOPPED
0700
```

ERROR MESSAGES:

'INVALID, SEE STM **>' SEE CONFIGURE SECTION ---CARD LOCATIONS DO NOT MATCH BSM SIZE - SEE CHART FOR VALID COMBINATIONS.

BSM SIZE ENTERED IN 1)					VALID CARD LOCATIONS TO BE ENTERED IN 2)									
					MS CARDS PLUGGED IN BOARD B1									
BSM:	1M	2M	3M	4M	LOC:	L2	M2	N2	P2	Q2	R2	T2	U2	
	X	X	X	X		X	X	X	X	X	X	X	X	
1M	Y	X	X	X		N	N	N	N	N	N	Y	Y	
2M	X	Y	X	X		N	N	N	N	Y	Y	Y	Y	
	X	Y	X	X		N	N	N	N	N	N	Y	Y	NOTE 1
3M	X	X	Y	X		N	N	Y	Y	Y	Y	Y	Y	
	X	X	Y	X		N	N	Y	Y	N	N	Y	Y	NOTE 1
4M	X	X	X	Y		Y	Y	Y	Y	Y	Y	Y	Y	
	X	X	X	Y		Y	Y	Y	Y	N	N	Y	Y	NOTE 1
	X	X	X	Y		N	N	Y	Y	N	N	Y	Y	NOTE 2

NOTE 1 - REQUIRES 1 MB CARDS IN POS T2 AND U2
NOTE 2 - REQUIRES 1 MB CARDS IN POS N2, P2, T2 AND U2.

This page has been
intentionally left blank

DEVICE RESTRICTIONS ON THE 4331

1. SOME DEVICES ARE NOT SUPPORTED AT ALL ON THE 4331.

2. SOME DEVICES ARE NOT SUPPORTED IN COMBINATION WITH OTHER DEVICES. THESE ARE CALLED EXCLUSIVITIES.

3. SOME DEVICES ARE SUPPORTED, BUT WITH RESTRICTIONS.

OVERRUN PROBLEMS ARE VERY OFTEN CAUSED BY INCORRECT ADDRESS ASSIGNMENT TO A SUPPORTED DEVICE.

MORE DETAILED INFORMATION IS AVAILABLE FROM THE SALES MANUAL, SYSTEM ASSURANCE DOCUMANTATION. IF YOU THINK YOU HAVE PROBLEMS CAUSED BY INCORRECT DEVICES OR INCORRECT COMBINATIONS OF DEVICES, YOU MAY BE ABLE TO SOLVE THEM BY CHECKING THE INFORMATION IN THIS SECTION. IF YOU STILL HAVE PROBLEMS, CHECK WITH YOUR SUPPORT CENTER, SYSTEM ASSURANCE REP, OR SALESMAN.

NOT SUPPORTED

1. 2841/2311 ON BYTE CHANNEL
2. 2804

EXCLUSIVITIES

1. 14XX EMU WITH VMA
2. 3340/3370 STRING SWITCH WITH ANY DISK EMULATOR
3. 231X ON BMPX WITH HSC

LIMITATIONS

1. FTA/3370 - POSSIBLE PERFORMANCE LIMITATION.
   - SEE CHANNEL CHARACTERISTICS MANUAL.

2. 231X ON BMPX WITH CA GREATER THAN 9600 BAUD/SEC - PERFORMANCE LIMITATION.

3. HSC WITH CA GREATER 9600 BAUD/SEC - PERFORMANCE LIMITATION.

This page has been
intentionally left blank

READER'S COMMENT FORM

This form may be used to communicate your views about this publication.
They will be sent to the author's department for whatever review and action, if any, is deemed appropriate.
Comments may be written in your own language; use of English is not required.

IBM may use or distribute any of the information you supply in any way it believes appropriate without incurring any obligation whatever. You may, of course, continue to use the information you supply.

Note: *Copies of IBM publications are not stocked at the location to which this form is addressed. Please direct any requests for copies of publications, or for assistance in using your IBM system, to your IBM representative or to the IBM branch office serving your locality.*

Possible topics for comment are:

Clarity Accuracy Completeness Organization Coding Retrieval Legibility

If you wish a reply, give your name and mailing address:

_____

_____

_____

Please fill in

Subject: _____ Page No.: _____

Document Title: _____ P/N: _____

Number of latest Technical Update (if any) concerning this publication (EC): _____

(REA): _____

Thank you for your cooperation. No postage stamp necessary if mailed in the U.S.A. (Elsewhere, an IBM office or representative will forward your comments.)

4331

Cut or Fold Along Line

READER'S COMMENT FORM

This form may be used to communicate your views about this publication.
They will be sent to the author's department for whatever review and action, if any, is deemed appropriate.
Comments may be written in your own language; use of English is not required.

IBM may use or distribute any of the information you supply in any way it believes appropriate without incurring any obligation whatever. You may, of course, continue to use the information you supply.

Note: *Copies of IBM publications are not stocked at the location to which this form is addressed. Please direct any requests for copies of publications, or for assistance in using your IBM system, to your IBM representative or to the IBM branch office serving your locality.*

Possible topics for comment are:

Clarity Accuracy Completeness Organization Coding Retrieval Legibility

If you wish a reply, give your name and mailing address:

_____

_____

_____

Please fill in

Subject: _____ Page No.: _____

Document Title: _____ P/N: _____

Number of latest Technical Update (if any) concerning this publication (EC): _____

(REA): _____

Thank you for your cooperation. No postage stamp necessary if mailed in the U.S.A. (Elsewhere, an IBM office or representative will forward your comments.)

EC366188 15 Nov 78	EC366189 15 JAN 79	EC 366272 31 Oct 79	P/N 8488441 Page 1 of 2	9 990 F

Reader's Comment Form

Fold and tape Please Do Not Staple Fold and tape

NO POSTAGE NECESSARY IF MAILED IN THE UNITED STATES

BUSINESS REPLY MAIL

FIRST CLASS PERMIT NO. 40 ARMONK, N.Y.

POSTAGE WILL BE PAID BY ADDRESSEE:

International Business Machines Corporation
Department 812B
1133 Westchester Avenue
White Plains, New York 10604

Fold and tape Please Do Not Staple Fold and tape

IBM

International Business Machines Corporation
Data Processing Division
1133 Westchester Avenue, White Plains, N.Y. 10604

IBM World Trade Americas/Far East Corporation
Town of Mount Pleasant, Route 9, North Tarrytown, N.Y., U.S.A. 10591

IBM World Trade Europe/Middle East/Africa Corporation
360 Hamilton Avenue, White Plains, N.Y., U.S.A. 10601

4331

Cut or Fold Along Line

Reader's Comment Form

Fold and tape Please Do Not Staple Fold and tape

NO POSTAGE NECESSARY IF MAILED IN THE UNITED STATES

BUSINESS REPLY MAIL

FIRST CLASS PERMIT NO. 40 ARMONK, N.Y.

POSTAGE WILL BE PAID BY ADDRESSEE:

International Business Machines Corporation
Department 812B
1133 Westchester Avenue
White Plains, New York 10604

Fold and tape Please Do Not Staple Fold and tape

IBM

International Business Machines Corporation
Data Processing Division
1133 Westchester Avenue, White Plains, N.Y. 10604

IBM World Trade Americas/Far East Corporation
Town of Mount Pleasant, Route 9, North Tarrytown, N.Y., U.S.A. 10591

IBM World Trade Europe/Middle East/Africa Corporation
360 Hamilton Avenue, White Plains, N.Y., U.S.A. 10601