GA33-1545
File No. 4300-01

Systems

Operator's Library:
IBM 4331 Processor
Remote Operator Console Facility
Feature Description
Operating Procedures
Service Representative Operations

First Edition, 30 August 1981

Changes are continually made to the information herein; before using this publication in connection with the operation of IBM systems, consult the latest *IBM System/370 and 4300 Processors Bibliography,* GC20-0001, for the editions that are applicable and current.

It is possible that this material may contain reference to, or information about, IBM products (machines and programs), programming, or services that are not announced in your country. Such references or information must not be construed to mean that IBM intends to announce such IBM products, programming, or services in your country. Publications are not stocked at the addresses given below; requests for copies of IBM publications should be made to your IBM representative or to the IBM branch office serving your locality.

A form for readers' comments is provided at the back of this publication. If the form has been removed, comments may be addressed either to:

International Business Machines Corporation
Department 812BP
1133 Westchester Avenue
White Plains, New York 10604

or to:

IBM Development & Research
Dept. 3179, Product Publications
Schoenaicher Strasse 220
D-7030 Boeblingen, Federal Republic of Germany

IBM may use or distribute any of the information you supply in any way it believes appropriate without incurring any obligation whatever.
You may, of course, continue to use the information you supply.

© Copyright International Business Machines Corporation 1981

Preface

This manual describes the Remote Operator Console Facility on the IBM 4331 Processor, how to operate the IBM 4331 Processor remotely and what to do in case of maintenance. You are assumed to have a knowledge of *Introduction to IBM Data Processing Systems*, GC20-1684, and some experience in operating an IBM 4331 Processor.

The information in this manual is organized in the following way:

- Chapter 1 contains Remote Operator Facility Descriptions,
- Chapter 2 contains Remote Operator Console Facility Operating Procedures,
- Chapter 3 contains Remote Operator Console Facility Service Representative Operations.

Prerequisite Reading:

IBM 4331 Processor Operating Procedures, GA33-1525.

Contents

Chapter 1 ..... **1-1**
Remote Operator Console Facility Descriptions 1-1
Introduction 1-2
4331 Remote Operator Console Facility (ROCF) 1-2
Remote Console Functions 1-2
Auto-Answer 1-3
Remote Operator Console Facility 1-3
Local Security Key 1-3
Customer Security via Password Verification 1-4
Configurations 1-5

Chapter 2 ..... **2-1**
Remote Operator Console Facility Operating Procedures 2-1
Introduction 2-2
System Function Key Emulation 2-3
Security Key/Lock Feature 2-7
Connection to a Selected 4331 Remote Processor 2-8
Mode Select 2-9
Native Displays and Printers / ROCF 2-10
Password Setting 2-12
Enable Auto-Answer 2-13
Disable Auto-Answer 2-14
Initial Microprogram Load (remotely) 2-15
Power Off (remotely) 2-16
3275 Operator Console Emulation 2-17
Fast ROCF Selections 2-21
Line Connection 2-21
ROCF Function Selection 2-22

Chapter 3 ..... **3-1**
Remote Operator Console Facility Service Representative Operations 3-1
How to Start Repair Actions 3-2
Repair Actions at the Remote Console Feature 3-2
What to do in Case of Support 3-2
How to Finish a Repair Action 3-3
Password 3-3
Password Loss 3-3
System Installation 3-4

Glossary **X-1**

Index **X-3**

Chapter 1

Remote Operator Console Facility Descriptions

This chapter describes the Remote Operator Console Facility (ROCF).

Introduction

The Remote Operator Console Facility will allow a complete system control of 4331 remote processors from a host system (see Figure 1-1 on page 1-5) or from a 3275 standalone console (see Figure 1-2 on page 1-5). The host system must have VM/SP Release 2 and PVM Release 2 or MVS/SP and MVS OCCF as an operating system support and a 327X console with 3275 emulation support (see Figure 1-1 on page 1-5).

If the host system is a 4331 processor and has an operating system support other than the above mentioned operating systems, the 4331 Processor Operator's Console can be used as 3275 console to control the 4331 remote processors (see Figure 1-3 on page 1-6).

The 4331 remote processor is using its service processor functions and a standalone TP port to connect on the request of a host system control operator to the host system or 3275 Standalone Remote Console.

The host system control operator is now able to monitor and to control the 4331 remote processor's system operations at the host system site.
In case of 3275 software emulation, the host system operator should be familiar with the *PVM Manual,* SC24-5208, or *MVS OCCF Manual,* SC20-2888.

It is conceivable that a central location controls a number of remote 4331 processors by dialing up each machine when necessary. However, such a centralized operation makes sense only when the need for operator interaction arises *infrequently*. This is because with a 600/1200 bit/sec. switched telephone line transmissions back and forth are rather slow, and the interference at the controlled machine is considerable.

It is assumed that job entry and data exchange are normally performed over leased high speed TP-lines and the remote operator control facility (ROCF) is used *only occasionally* to look into the job status, check on a possible "hang" condition, re-IPL the system if required, etc. The ROCF is not intended for interactive jobs. It must be understood that all activities on the display/printer adapter of the 4331 are *suppressed* while (and for as long as) remote control is excerpted. This means that up to sixteen devices are temporarily blocked.

To speed up IPL it is recommended to use automatic IPL procedures of the operating systems and to disconnect the line as long as the IPL process is running.

4331 Remote Operator Console Facility (ROCF)

Remote Console Functions

With the Remote Operator Console Facility following functions are supported and described:

- Auto-Answer

- Remote Operator Console
- Local Security Key
- Customer Security via Password Verification

Auto-Answer

This function allows the 4331 processor to answer automatically a telephone call from the host site requesting a remote control session.

The function has to be supported with an external Auto-Answer 600/1200 BPS modem with the same characteristics as described for the Remote Support Feature (RSF). The connection (link) is made with a switched line, which uses Binary Synchronous Communications (BSC) line protocol. The Auto-Answer function can be enabled and disabled by the operator or by the customer engineer.

Remote Operator Console Facility

This function allows the operator to monitor and control a 4331 remote processor with a host system console (emulated 327X console) or a 3275 standalone console remotely (see Figures 1, 2 and 3). With the remote operator console function the system operator is able to perform remotely all manual operations described in the *4331 Processor's Operating Procedures,* Chapter 3, GA33-1525. Furthermore IPL, IML and POWER OFF can be controlled from a host site. In addition the system operator is able to check the status of the 4331 remote processors on a timely basis, e.g. program hangs, check stops, and take the appropriate action.

When a host remote connection (link) is established and password validations are complete for the host location, the current screen will be displayed on the console selected by the remote console function. If Power On was locally performed, the remote console screen shows the program load picture on screen. This allows the remote console operator to IPL the 4331 remote processor without additional effort.

Local Security Key

Normally, a 4331 remote processor can be operated by both the 3278-2A or 3279-2C operator console and by the host system remote console or 3275 standalone remote console. With the security keylock feature at the 3278-2A/3279-2C, the 4331 remote processor can only be controlled remotely if the security key is in lock position or removed.

Customer Security via Password Verification

This function avoids unauthorized personnel gaining access to the 4331 remote processor using the remote console feature. When the remote operator console facility is installed, the system operator has to select and set a password which is stored by the 4331 remote processor onto its system diskette. The right password allows access to the 4331 remote processor for the remote console session. If the password was not entered correctly, the ROCF allows three retries, before the line is disconnected. The password can also be altered from time to time (see "Password Setting," in Chapter 2).

If there is no password saved on the diskette, the 4331 remote processor will not allow initiating or resuming the remote console function. It is possible to initiate the remote console function with a diskette containing a password and then to change to a diskette without a password.

If a higher level of sensitivity is required, an external encryption device can be attached to the 4331 remote processor. This device along with a matching device at the host system gives complete control over the security of transmissions.

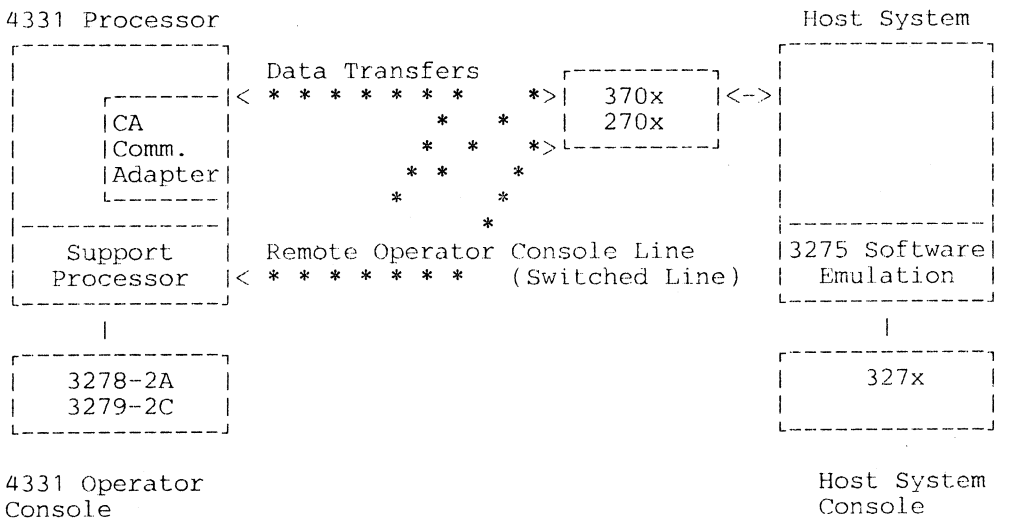

Figure 1-1. ROCF. Remote Control via Host System Operator Console

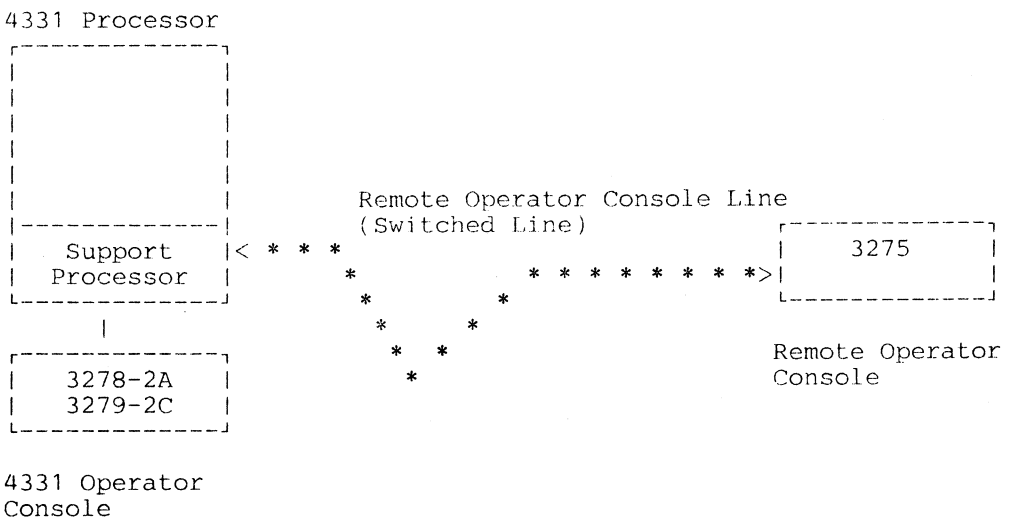

Figure 1-2. ROCF. Remote Control via Standalone 3275 Operator Console

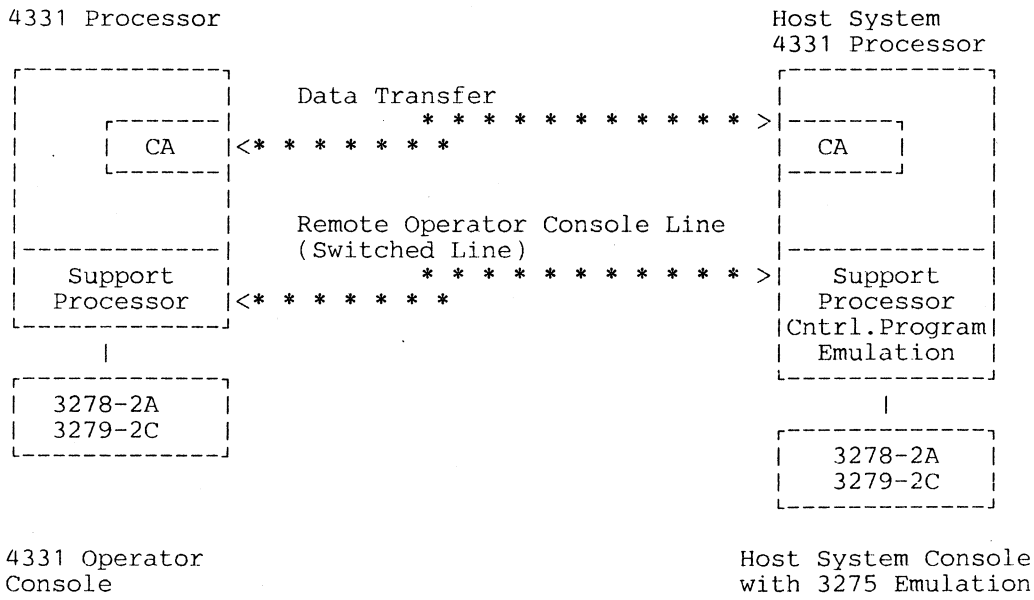

Figure 1-3. ROCF. Remote Control via 4331 Processor Operator Console with 3275 Emulation.

Chapter 2

Remote Operator Console Facility Operating Procedures

This chapter describes how to operate the 4331 processor in a ROCF environment.

Introduction

The following new procedures are available for ROCF:

Password Setting. This procedure is necessary after the installation of the 4331 remote processor or with the installation of a new microcode diskette. It also allows you to change your password.

Note: Never forget your password!
This causes an IBM support call.

The password procedure insures that only authorized people have access to the 4331 remote processor from the host processor.
If you also want to avoid the access to the 4331 remote processor on site, (on machines with keylock feature installed) remove the security key, which will lock the keyboard. *Please deposit the key nearby so that it is available in case of maintenance.* Together with the password you may enter a node ID, which stands for a node name, which is displayed when the TP-line is connected.

Enable Auto-Answer. This procedure allows you to enable an automatic remote connection. (If Auto-Answer is enabled, the console screen will display ROCF on line 24).

Disable Auto-Answer. This procedure allows you to disable an automatic remote connection.

Initial Microprogram Load. This procedure allows you a remote controlled IML.

Remote Power Off. This procedure allows you to remote Power Off.

All procedures described in the 4331 Processor Operating Procedures, GA33-1525, Chapter 3, are available for remote operation also.

Restrictions

1. The Display of line 25 of the selected 4331 remote processor is not transmitted to the remote console.

2. Remotely Power On of the selected 4331 remote processor is not supported.

3. The blinking screens at the standalone 3275 are caused by the characteristics of the terminal (receiving mode).

4. No SYSTEM WAIT INDICATORS are transmitted.
   To check whether the system is in WAIT state or in RUN mode:

   Display current PSW.
   See bits EMWP.

   W-bit on = WAIT state
   W-bit off = RUN mode

   See *4331 Processor Operating Procedures*, GA33-1525, Chapter 3, "Current PSW."

5. There is no indication if the copy printer runs out of paper. In this case the TP-line will be disconnected.

System Function Key Emulation

The program function keys on the host system or 327X may behave as 'regular' (PF 1-12) program function keys, or may emulate the on-site 4331 operator console system function keys, i.e., START, STOP, etc.

The host 327X user determines the mode of the program function keys by pressing the TEST REQ key and reading the response on line 24: P for Program Function Key mode and S for System Function Key mode.

There are two types of keyboards in regard to the program function keys (PF-keys):

1. Keyboards with 12 PF keys

2. Keyboards with 24 PF keys

The following tables show the 327X program function keys of both versions on the left, and their function as seen by the 4331 on the right side.

1. Keyboard with 12 PF keys:

327X Console PF Key in P Mode	327X PF Key as seen by the 4331 System
PF1	PF1
PF2	PF2
PF3	PF3
PF4	PF4
PF5	PF5
PF6	PF6
PF7	PF7
PF8	PF8
PF9	PF9
PF10	PF10
PF11	PF11
PF12	PF12

327X Console PF Key in S Mode	327X PF Key as seen by the 4331 System	Notes
PF1	START	1
PF2	STOP	1
PF3	INTERRUPT	1
PF4	CHANGE STATUS DISPLAY MODE	3
PF5	NOT USED	1
PF6	NOT USED	1
PF7	PAGE UP	1
PF8	PAGE DOWN	1
PF9	NOT USED	1
PF10	COPY (3275 only)	5
PF11	SP M/O (SPIL MAN-OPS)	1
PF12	MODE SELECT	1

Attention Keys on 327X Keyboard	As seen by 4331 System when 327X Key is pressed	Notes
PA1	PA1 (REQ)	1
PA2	PA2 (CNCL)	1
CLEAR	DIAG SELECT	4
ENTER	ENTER	1
TEST REQUEST	PF MODE CHANGE (from P-Mode to S-MODE or vice versa)	2

To switch from S-mode to P-mode press TEST REQUEST key. See indication in line 24, position 77.

To indicate the meaning of your PF-keys at the keyboard order:

IBM 3275/3277 PF Key Template, GX20-1981.

2. Keyboard with 24 PF keys:

327X Console PF Key in S Mode	327X PF Key as seen by the 4331 System
PF1	PF1
PF2	PF2
PF3	PF3
PF4	PF4
PF5	PF5
PF6	PF6
PF7	PF7
PF8	PF8
PF9	PF9
PF10	PF10
PF11	PF11
PF12	PF12

327X Console PF Key in S Mode	327X PF Key as seen by the 4331 System	Notes
PF13	START	1
PF14	STOP	1
PF15	INTERRUPT	1
PF16	CHANGE STATUS DISPLAY MODE	3
PF17	NOT USED	1
PF18	NOT USED	1
PF19	PAGE UP	1
PF20	PAGE DOWN	1
PF21	NOT USED	1
PF22	COPY (3275 only)	5
PF23	SP M/O (SPIL MAN-OPS)	1
PF24	MODE SELECT	1

Attention Keys on 327X Keyboard	As seen by 4331 System when 327X Key is pressed	Notes
PA1	PA1 (REQ)	1
PA2	PA2 (CNCL)	1
CLEAR	DIAG SELECT	4
ENTER	ENTER	1
TEST REQUEST	PF MODE CHANGE (from P-Mode to S-MODE or vice versa	2

With 24 PF keyboard switching from S-mode to P-mode is not necessary.

Notes:

1. Refer to *4331 Processor's Operating Procedures,* GA33-1525, for a description of these keys.

2. This key at the 327X keyboard is used to change the twelve program function keys on the right-hand side of the 327X keyboard from the 'regular' program function key mode to the system function key mode, or vice versa. The mode of the 327X program function keys is displayed on the bottom right-hand side of the 327X display screen. The operational mode of the keys will change each time the TEST REQ key on the 327X keyboard is pressed. If the program function keys are in 'regular' mode, P will be displayed. If the program function keys are in emulation mode, S will be displayed.

3. This key determines whether the system status (lines 21-24) will be updated with each diskette ID change or not.

4. Pressing the CLEAR key on the 327X keyboard will erase the current 327X screen and will display the Maintenance-Selection picture.

5. The key requests a hard copy printout on the 3284/3286 printer attached to the 327X.

Security Key/Lock Feature

If the feature is installed on the 4331 processors 3278-2A/3279-2C operator console, it operates as follows:

- If the lock is in the locked (OFF) position or the key is removed and Auto-Answer is enabled:

  1. The console keyboard is locked and only line 25 is displayed.

  2. Input can only be entered into the system from the host console keyboard.

  3. Messages to the console are routed to the console at the host site. If the remote function is active, the routing occurs through the remote console buffer so that, provided the console is unlocked, it will display the image that was last sent to the host console.

  4. Messages to the 4331 local operator console from the system control program or customer programs receive normal ending status, even if the ROCF function is enabled but not active.

- If the lock is in the unlocked (ON) position:

  1. The console keyboard is unlocked.

  2. Input can be entered into the system from either the remote console keyboard or the host console keyboard.

  3. The console display screen is not blanked.

  4. Messages to the 4331 console are displayed on both the host console and the remote console if the remote function is active.

  5. Messages to the 4331 console are displayed only on the remote console if the host console function is not active.

Connection to a Selected 4331 Remote Processor

This procedure allows you to connect a 4331 remote processor to a 3275 stand-alone control terminal or to a 327X control terminal being emulated as a 3275 on the host processor.

1. Dial up the number of the selected 4331 remote processor (if "Enable Auto-Answer" was set at remote 4331 processor).

2. Wait for answer tone.

3. Set telephone to data mode.

4. The following screen picture will appear:

```
   * REMOTE OPERATOR CONSOLE FACILITY LOG ON *

NODE ID:          ENTER PASSWORD:
```

Key in your password. (The password keyed in will not be displayed!) Press ENTER!

When the password is verified by the 4331 remote processor either the screen of the operating system, Mode select, or Diag select is displayed depending on the state of the machine.

Notes:

1. If an incorrect password was keyed in, the system displays the message:

   "INCORRECT PASSWORD, RETRY."

   After the third try the system displays the message:

   "TOO MANY PASSWORDS, LINE DISCONNECTED."

   Start with new dial up.

2. If you don't enter your password in time (one minute), the line is disconnected.

3. If the remote operator console is switched to "TEST MODE" or is "POWERED OFF" the system displays the message:

   "PASSWORD NOT ACCEPTED, BECAUSE SYSTEM CONSOLE IN TEST MODE OR POWER OFF.
   LINE DISCONNECTED."

   Correct problem and start with dial-up procedure again.

Mode Select

If you want to run other procedures:
Press PF 12 key (MODE SELECTION)in S-mode.

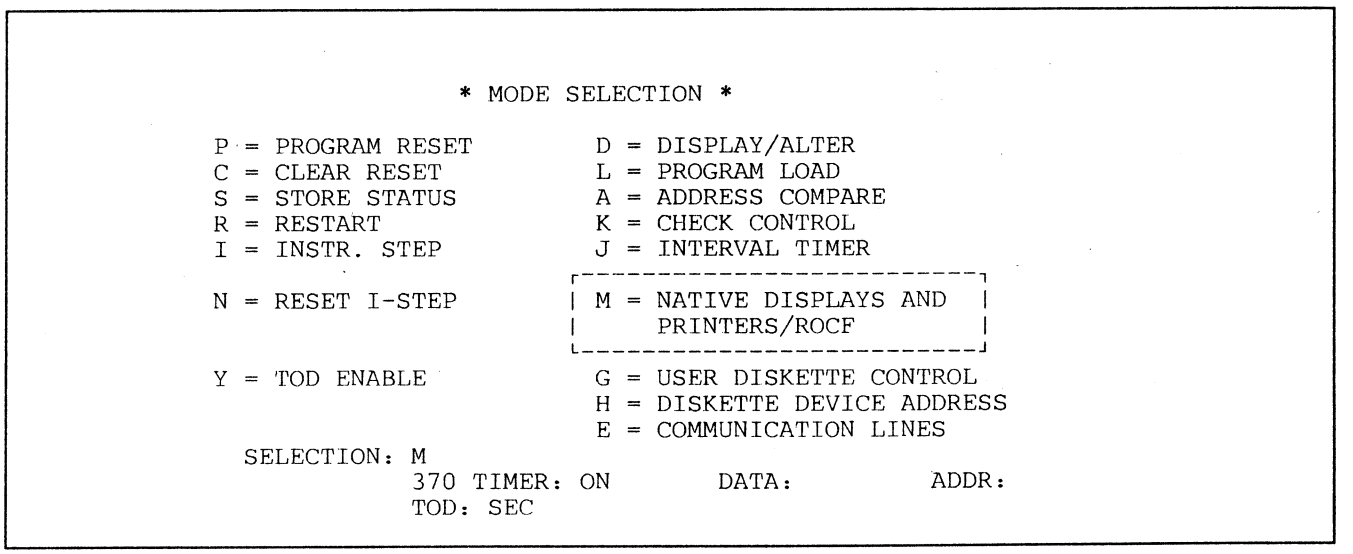

Note: For details on all operation modes refer to *4331 Processor Operating Procedures,* GA33-1525, Chapter 3, with the exception of selection M "Native Displays and Printers/ROCF."

Native Displays and Printers / ROCF

This procedure allows you to select:

1. Remote Operator Console Facility Initialization
2. Initial Microprogram Load (IML)
3. Native Display and Printer Configuration
4. Remote Power Off

- Key in M and press ENTER.

```
        * NATIVE DISPLAY AND PRINTER/ROCF SUBSELECTION *

  ┌-------------------------------------------------┐
  | R = REMOTE OPERATOR CONSOLE FACILITY INITIALIZATION |
  └-------------------------------------------------┘
    I = INITIAL MICRO PROGRAM LOAD
    M = NATIVE DISPLAY AND PRINTER CONFIGURATION
    P = REMOTE POWER OFF

                AUTO-ANSWER IS DISABLED [1200 BPS]
                            [ENABLED]   [ 600 BPS]
                LINE IS DISCONNTECTED
                            [CONNECTED]
                SELECTION: M
                                        TIMER: ON
                             TOD:  SEC
```

Note: For selection M = Native Display and Printer Configuration refer to the *4331 Processor Operating Procedures,* GA33-1525, Chapter 3. See also "System Function Key Emulation" on page 2-3.

- Key in R and press ENTER.

```
                * REMOTE OPERATOR CONSOLE FACILITY *

          PASSWORD SETTING AND AUTO-ANSWER INITIALIZATION
        ┌------------------------------┐
        | P = PASSWORD/NODE-ID SETTING |
        └------------------------------┘
          H = ENABLE AUTO-ANSWER (HIGH SPEED 1200 BPS)
          L = ENABLE AUTO-ANSWER (LOW  SPEED  600 BPS)
          D = DISABLE AUTO-ANSWER
          E = 3275 EMULATION

              AUTO-ANSWER IS ENABLED      1200 BPS
                             [DISABLED]   [600 BPS]
              LINE IS CONNECTED
                             [DISCONNECTED]
                      SELECTION: R
           MAN                370 TIMER: ON
                              TOD: SEC              ROCF
```

Password Setting

This procedure allows you to set or change a password and a node ID. The password/node ID procedure will allow a maximum password/node ID length of 8 and a minimum of 4 characters and/or numbers.

- Key in P, press ENTER.

```
* REMOTE OPERATOR CONSOLE FACILITY PASSWORD *

ENTER NEW PASSWORD
          370 TIMER: ON
          TOD: SEC                          ROCF
```

1. Key in your selected password. (The password is invisible.) Press ENTER.

   The system displays the message:

   "REPEAT NEW PASSWORD."

2. Key in your selected password again. (If there is a mismatch, the system disconnects immediately. Restart with dial-up procedure.)
   Press ENTER. In case of a password change, the system comes back with the message:

   "ENTER OLD PASSWORD."

3. Key in your old password. (This procedure avoids changing of the password by persons without permission of system control access.)
   Press ENTER. The system displays the message:

   "ENTER NODE ID OR BLANK."

4. Key in a selected node ID, press ENTER. (If the node ID is not changed, press ENTER only.) The system displays the message:

   "WARNING: DO NOT INTERRUPT DISKETTE UPDATE UNTIL COMPLETION."

   Wait until the system displays the message:

   "PASSWORD CHANGED."

5. Press ENTER to return.

   Note: Node ID (node identification) is a selected name or number to identify a given 4331 remote processor.

Enable Auto-Answer

If Auto-Answer is enabled, the 4331 remote processor will automatically accept any call from the host processor.

```
        * REMOTE OPERATOR CONSOLE FACILITY *

     PASSWORD SETTING AND AUTO-ANSWER INITIALIZATION
  P = PASSWORD SETTING
 ┌---------------------------------------------┐
 | H = ENABLE AUTO-ANSWER (HIGH SPEED 1200 BPS) |
 |---------------------------------------------|
 | L = ENABLE AUTO-ANSWER (LOW  SPEED  600 BPS) |
 └---------------------------------------------┘
  D = DISABLE AUTO-ANSWER
  E = 3275 EMULATION  [ENABLED]

            AUTO-ANSWER IS ENABLED   1200 BPS
                          [DISABLED][ 600 BPS]
            LINE IS CONNECTED
                   [DISCONNECTED]
            SELECTION: M
                                370 TIMER: ON
                                TOD:  SEC     ROCF
```

- Key in H and press ENTER (for high speed 1200 BPS).
  Key in L and press ENTER (for low speed 600 BPS).

  The system displays the message:

  "WARNING: DO NOT INTERRUPT DISKETTE UPDATE UNTIL COMPLETION."

  Wait until the system displays the message:

  "AUTO-ANSWER ENABLED "

  Note: To switch from 600 BPS to 1200 BPS, or vice versa, perform disable Auto-Answer procedure first.

Disable Auto-Answer

1. Key in D and press ENTER. If Auto-Answer is disabled, the 4331 remote processor will automatically not accept any call from the host processor.

   If Auto-Answer is enabled, the system displays the message:

   "PRESS PF1 TO DISABLE AUTO-ANSWER:
   WARNING: BE AWARE YOU DISABLE REMOTE CONSOLE OPERATION."

2. Press PF 1 key.
   The system displays the message:

   "WARNING: DO NOT INTERRUPT DISKETTE UPDATE UNTIL COMPLETION."

   Wait until the system displays the message:

   "AUTO-ANSWER DISABLED."

   If a remote session is taking place, the system displays the message:

   "SORRY THIS FUNCTION IS NOT ALLOWED DURING REMOTE OPERATION."

   Important Note: If you are at the remote operator console and you received the above message, call host operator and ask for *line disconnect.*

Initial Microprogram Load (remotely)

This procedure allows you to IML the 4331 remote processor remotely.

1. Press PF 12 key (MODE SELECTION) in S-mode.

2. Key in M and press ENTER.

```
    * NATIVE DISPLAY AND PRINTERS/ROCF SUBSELECTION *

  R = REMOTE OPERATOR CONSOLE FACILITY INITIALIZATION
 ┌--------------------------------┐
 | I = INITIAL MICRO PROGRAM LOAD |
 └--------------------------------┘
  M = NATIVE DISPLAY AND PRINTER CONFIGURATION
  P = REMOTE POWER OFF
        AUTO-ANSWER IS DISABLED  [1200 BPS]
                        [ENABLED] [ 600 BPS]
        LINE IS DISCONNECTED
               [CONNECTED]
        SELECTION: MI
                     TIMER: ON              DATA:
                     TOD:   SEC             ROCF
```

3. Key in I and press ENTER.
   The system displays the message:

   "ENTER IML TO RELOAD THE MICROCODE.
   BE AWARE YOU WILL DESTROY ANY SYSTEM RUNNING."

4. Key in IML, press ENTER.

   The system displays the message:

   "LINE IS DISCONNECTED FOR IML.
   RECONNECT AFTER ABOUT 3 MINUTES."

Power Off (remotely)

This procedure allows you to power off the 4331 remote processor remotely.

1. Press PF 12 key (MODE SELECTION) in S-mode.
2. Key in M and press ENTER.

```
  * NATIVE DISPLAY AND PRINTERS/ROCF SUBSELECTION *

  R = REMOTE OPERATOR CONSOLE FACILITY INITIALIZATION
  I = INITIAL MICRO PROGRAM LOAD
  M = NATIVE DISPLAY AND PRINTER CONFIGURATION
┌-----------------------┐
| P = REMOTE POWER OFF  |
└-----------------------┘

            AUTO-ANSWER IS DISABLED [1200 BPS]
                           [ENABLED] [ 600 BPS]
            LINE IS DISCONNETED
                    [CONNECTED]
            SELECTION: MP
                                370 TIMER: ON
                                TOD: SEC      ROCF
```

3. Key in P and press ENTER. The system displays the message:

   "USE POWER OFF BUTTON."
   (Message on 4331 remote console.)

   "ENTER DOWN TO POWER OFF THE SYSTEM.
   BE AWARE YOU WILL DESTROY ANY SYSTEM RUNNING."
   (Message on host console.)

4. Key in DOWN, press ENTER. The system displays the message:

   "SYSTEM POWER OFF, LINE DISCONNECTED."

   Note: A remote Power On is not supported.

3275 Operator Console Emulation

This procedure allows you to use the 4331 Processor Operator Console (3278-2A, 3279-2C) as a host console with control program 3275 emulation (see also Figure 1-3 on page 1-6).

1. Press PF 12 key (MODE SELECTION) in S-mode.

2. Key in MR and press ENTER.

3. Disable Auto-Answer (if ROCF is indicated on line 24 Auto-Answer is enabled).

```
                    * REMOTE OPERATOR CONSOLE FACILITY *
                 PASSWORD SETTING AND AUTO-ANSWER INITITIALIZATION
           P = PASSWORD SETTING
           H = ENABLE AUTO-ANSWER (HIGH SPEED 1200 BPS)
           L = ENABLE AUTO-ANSWER (LOW SPEED 600 BPS)
           D = DISABLE AUTO-ANSWER
         ┌---------------------┐
         | E = 3275 EMULATION  |
         └---------------------┘

              AUTO-ANSWER IS  ENABLED     1200 BPS
                             [DISABLED]  [ 600 BPS]
              LINE IS CONNTECTED
                      [DISCONNECTED]
                SELECTION:
                370 TIMER: ON
                TOD: SEC           ROCF
```

4. Key in E, press ENTER.
   If Auto-Answer was not disabled the system displays:

   "THIS FUNCTION CANNOT BE PERFORMED BECAUSE AUTO-ANSWER IS ENABLED.
   DISABLE AUTO-ANSWER (ASK HOST OPERATOR FOR PERMISSION)."

```
              *** 3275 CONSOLE EMULATION ***

          ENTER LINE SPEED
        ┌---------------------------┐
        | H = HIGH SPEED [1200 BPS] |
        |---------------------------|
        | L = LOW SPEED  [ 600 BPS] |
        └---------------------------┘

370 TIMER: ON     DISK            DATA:        ADDR.:
TOD:                              ┌-------------------------┐
                                  | See Note:               |
                                  └-------------------------┘
```

5. Key in H and press ENTER,

Key in L and press ENTER,
(low speed, 600 BPS).

Note:

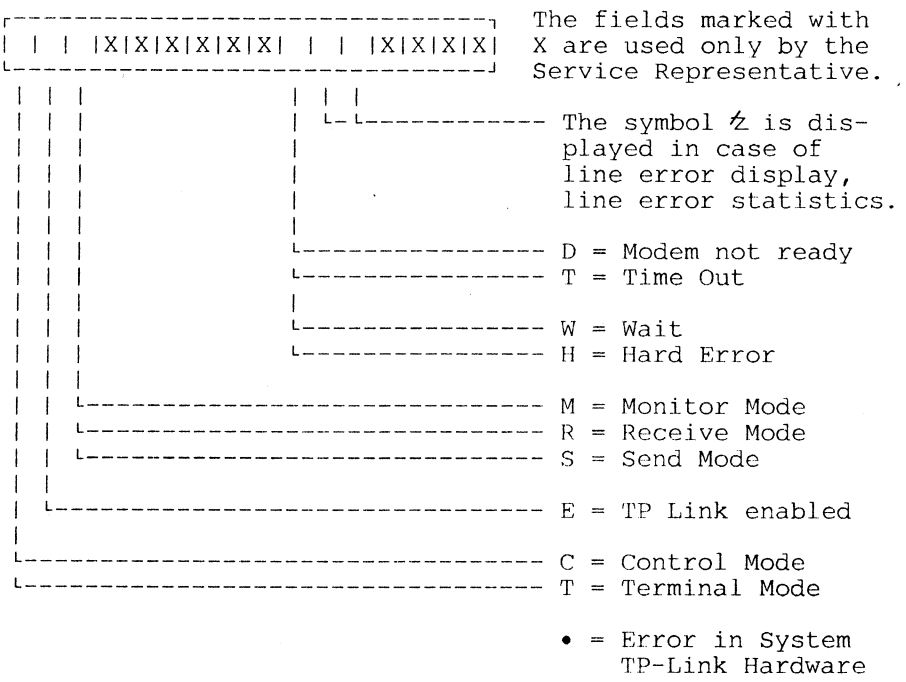

6. Dial up the number of the selected 4300 remote processor (if "Enable Auto-Answer" was set at the selected 4300 remote processor).

7. Wait for answer tone.

8. Set telephone to data mode.

9. The following screen picture will appear:

```
* REMOTE OPERATOR CONSOLE FACILITY LOG ON *
  NODE ID:        ENTER PASSWORD:
```

See: Connection to a selected 4331 remote processor in this chapter.

Notes:

1. All keys on your 32782-A/3279-2C are equivalent to the keys of the selected 4300 remote processor.

2. The ALTERNATE and INTERRUPT keys (together) disconnect the TP line.

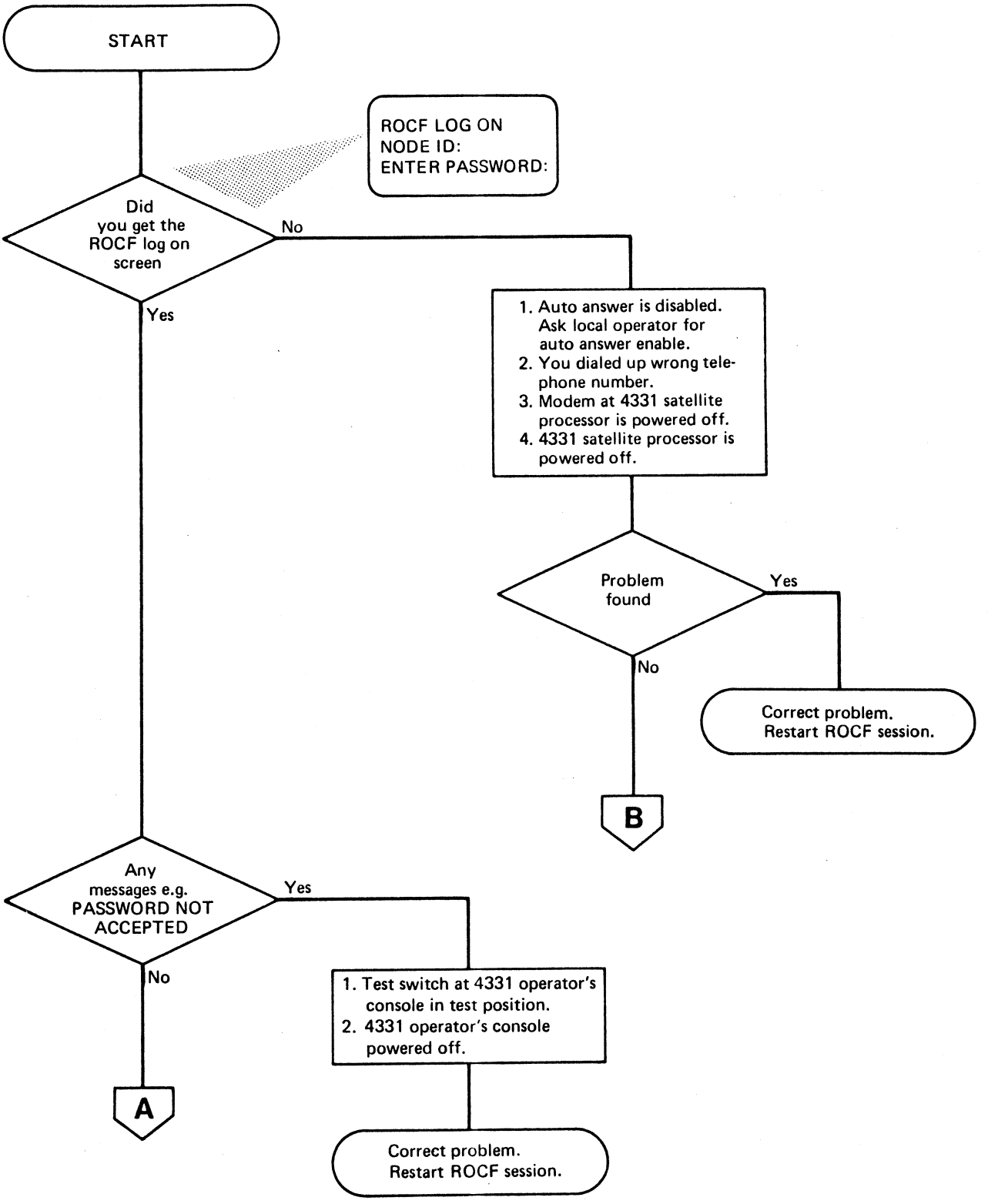

Figure 2-1 (Part 1 of 2). ROCF. Operator's Problem Determination

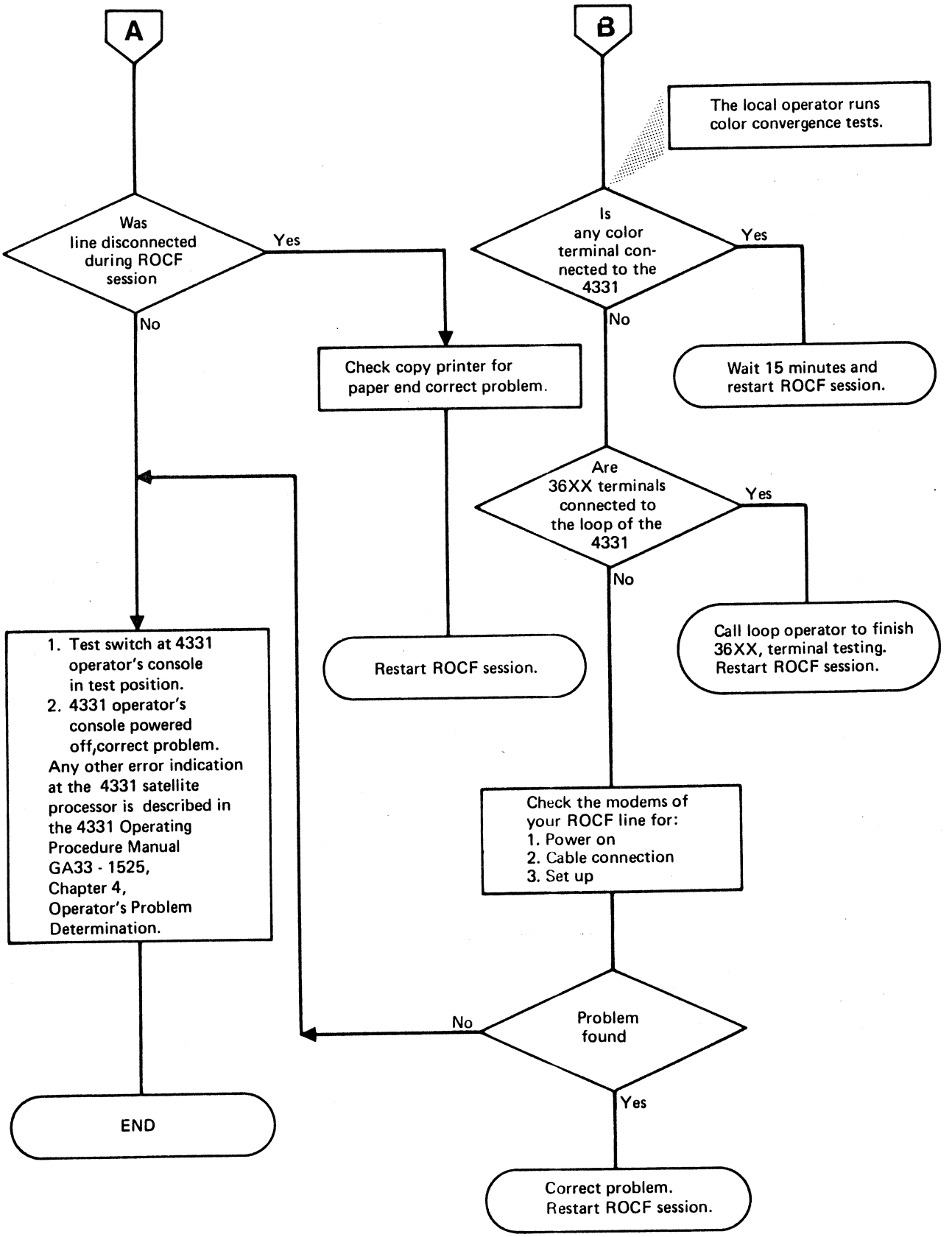

Figure 2-1 (Part 2 of 2). ROCF. Operator's Problem Determination

Fast ROCF Selections

Line Connection

1. Dial-up number of the selected 4331 remote processor.
2. Wait for answer tone.
3. Set up telephone to data mode.

```
* REMOTE OPERATOR CONSOLE FACITLIY LOG ON *

NODE ID:      ENTER PASSWORD:
```

4. Key in your Password, press ENTER.
5. Press PF 12 key (Mode Selection) in S-mode. (Keyboard with 12 PF keys.)

   Press PF 24 key (Keyboard with 24 PF keys.)

```
* MODE SELECTION *
```

ROCF Function Selection

```
┌─┐ ┌─┐ ┌──────┐
|M| |I| |ENTER|    Initial Microprogram Load
└─┘ └─┘ └──────┘

┌─┐ ┌─┐ ┌──────┐
|M| |P| |ENTER|    Remote Power Off
└─┘ └─┘ └──────┘

┌─┐ ┌─┐ ┌──────┐
|M| |R| |ENTER|    Remote Operator Console Facility
└─┘ └─┘ └──────┘
```

* REMOTE OPERATOR CONSOLE FACILITY *

```
┌─┐ ┌──────┐
|E| |ENTER|        3275 Emulation
└─┘ └──────┘

┌─┐ ┌──────┐
|H| |ENTER|        Enable Auto-Answer (1200 BPS)
└─┘ └──────┘

┌─┐ ┌──────┐
|L| |ENTER|        Enable Auto-Answer ( 600 BPS)
└─┘ └──────┘

┌─┐ ┌──────┐
|P| |ENTER|        Password Setting
└─┘ └──────┘

┌─┐ ┌──────┐      Disable Auto-Answer
|D| |ENTER|        (Is only possible from remote
└─┘ └──────┘      processor.)
```

1. Press PF 12 key (S-mode) Press PF 24 key

   to return to the MODE SELECTION screen.

2. Switch/press "LINE DISCONNECT " to terminate ROCF session.

   Notes:

   a. For all operations follow messages on screen.

   b. ROCF on line 24 indicates that Auto-Answer is enabled.

Chapter 3

Remote Operator Console Facility Service Representative Operations

This chapter describes how to maintain a 4331 remote processor with the Remote Operator Console Facility.

How to Start Repair Actions

When you start a repair action at the 4331 remote processor, call the system control operator.
It may happen that the 4331 processor operator console (3278-2A/3279-2C) is locked (security keylock). Therefore, you should also ask the system control operator where the security key is deposited.

1. Call the system operator (ask for disable permission). (ROCF display on screen on line 24 indicates that Auto-Answer is enabled).

2. Check that the security key (optional feature) is inserted and turned fully clockwise.

3. Press MODE SEL. The 'Mode Selection' display will appear.

4. Type in selection code MR (fast selection for the 'Remote Operator Console Facility' display). Press ENTER.

5. Write down the indicated telecommunication line speed for later use (1200 BPS or 600 BPS).

6. Type in selection code D (Disable Auto-Answer) and Press ENTER.

7. Follow the instructions appearing on the screen ('Press PF1...')

8. Wait until the message 'AUTO-ANSWER DISABLED' is displayed.

The 4331 remote processor is now a standalone machine and you can start the repair actions using the start MAP 0000. ENTRY POINT AA.

Repair Actions at the Remote Console Feature

The Remote Operator Console Facility is an extension to the Remote Support Facility (RSF). Therefore, all maintenance procedures and diagnostic procedures described in *Volume 13, STM,* pages 4501 to 4515, can be used to test the Remote Operator Console Facility.

What to do in Case of Support

In case of support use the same procedures and facilities to establish the link to your support center (see *Volume 13, STM,* pages 4501 to 4515).

If you did not disable Auto-Answer, the system displays the message:

"THIS FUNCTION IS NOT ALLOWED AS LONG AS AUTO-ANSWER IS ENABLED."

1. Call host operator and ask for line disconnect.

2. Follow disable procedure on screen (or see Chapter 2 "DISABLE AUTO ANSWER"), and start remote support session again.

How to Finish a Repair Action

When you have finished the repair action and the verification of the repair action, you have to enable the Remote Operator Console Facility again and establish the link to the system control operator.

1. Inform the system operator of the host system that Auto- Answer will be enabled again.

2. Ensure that IML has been performed with the CNTRL diskette installed.

3. Press MODE SEL. The 'MODE SELECTION' display will appear.

4. Type in selection code MR (fast selection for the 'Remote Operator Console Facility' display). Press ENTER.

5. Type in the correct selection code for the telecommunication line speed wanted:
   H for 1200 BPS
   L for 600 BPS
   Press ENTER.

6. Wait until the message 'AUTO-ANSWER ENABLED' is displayed. The system operator of the host system can now establish the data link.

7. Activate the security keylock (optional feature) if wanted.

Password

For all site operations at a 4331 remote processor's 3278-2A/3279-2C console the knowledge of the password is not needed. (See also *Password Setting Procedure*, Chapter 2.) The password is transferred automatically with the copy configuration program on to a new system diskette. (New system diskette installation with MES, REA or EC).

Password Loss

If the system operator loses his selected password, which is stored on the system diskette, there is no way to retrieve it from the system diskette.

Recommended action:

1. Order new system diskette from plant.

2. Note *configurator* using old system diskette.
   Important Note: Do not use the Copy Configuration Program.

3. Type in *configurator* using new system diskette, which was ordered from the plant.

If you have installed a 4331 remote processor, the system diskette does not contain a password. To establish the first line connection to the host system, the following procedure has to be performed:

Ensure that IML was performed with system diskette.

1. IBM Maintenance and Service Program Selection. (Hold down ALT Key and press DIAG Key.)

2. Select Utilities / Remote / Press ENTER.

3. Select Remote Support / Press ENTER.

4. Select Console Support / Press ENTER.

5. Give your input: Y, N, N, Y / Press ENTER.

6. Wait until test has completed (40 seconds). Message:

   "SUCCESSFUL END OF INTEGRATED TEST."

7. Follow instructions indicated on screen.

8. System operator takes over control of 4331 remote processor and starts with password setting.

   Change key mode to S.) Operator's
   Key in MR/press ENTER.) action at
   Password setting procedure.) host con-
   Enable Auto-Answer procedure.) sole

   Note: In case of line break down restart with 1.

```
                    * REMOTE CONSOLE SUPPORT *

 MACHINE-TYPE..: 4331          CE - NAME.....: _ _ _ _
 MACH.-SERIAL-NO: XXXXX        CUSTOMER-NAME.: _ _ _ _
 BRANCH-OFFICE.: _ _ _ _       CUST.TELEPHONE: _ _ _ _

 REMOTE CONSOLE WITH '3275'..............(Y/N): Y
 VOICE TO DATA SWITCHING BY KEYBOARD...(?/Y/N): N
 LOW SPEED (600 BPS) WANTED..............(Y/N): N
 INTEGRATED TEST (SEE NOTE)..............(Y/N): Y

   GIVE YOUR INPUT AND DEPRESS 'ENTER'.

NOTE: FOR WT INTEGRATED MODEM (38LS) THE TEST MUST
      NOT BE EXECUTED IF THE HANDSET IS OFF HOOK!
_____________________________________________________
-----------------------------------------------------
      TIMER: OFF                DATA:     ADDR:
        TOD: SEC
```

Note: If a reference code appears, enter the appropriate MAP. If any other indication appears refer to *Volume 13, STM,* pages 4501-4515.

If the Auto-Answer was not disabled, the following screen picture will appear:

```
                    *REMOTE CONSOLE SUPPORT*
            THIS FUNCTION IS NOT ALLOWED AS LONG AS
                      AUTO-ANSWER IS ENABLED

      TO DISABLE AUTO-ANSWER PRESS MODE SELECT AND
      SELECT ROCF
      AFTER THIS SESSION RE-ENABLE AUTO-ANSWER AGAIN.

MAN   370 TIMER: ON        DATA: 0000     ADDR: 000000
      TOD: SEC
```

Disable Auto-Answer and restart with 1.

Attention: In case of a TP line connection to 3275 standalone console it may happen that the line will be disconnected within 20 seconds. The reason is the 20-second timer in the 3275 console, see IBM 3270 Information Display System Physical Planning Information and Installation, SY27-2349.

Recommended Action: Ask the host operator to establish the TP line.

Glossary

bps. bits per second

bsc. binary synchronous communications

cncl. cancel

diag. diagnostic

id. identification

iml. initial microcode load

man ops. manual operations

modem. modulator - demodulator

pf. program function

p - mode. program function key mode

req. request

rsf. remote support feature

s - mode. system function key mode

sp. spil

tp. tele processing

Index

Special Characters

customer security via password verification 1-4
    disable auto-answer 2-2
    enable auto-answer 2-2
    initial microprogram load 2-2
    password setting 2-2
    remote power off 2-2

A

auto-answer 1-3

C

connection to a selected 4331 remote processor 2-8
customer security via password verification 1-3

D

disable auto-answer 2-14

E

enable auto-answer 2-13

H

how to finish a repair action 3-3
how to start repair actions 3-2

I

initial microprogram load (remotely) 2-15

L

local security key 1-3

M

mode select 2-9

N

native displays and printers/ROCF 2-10

P

password 3-3
password loss 3-3
password setting 2-12
    node ID. 2-12
    password 2-12
power off (remotely) 2-16

R

remote console functions 1-2
remote operator console facility 1-3
remote power off 2-2
repair actions at the remote console 3-2
restrictions 2-2

S

security Key/Lock feature 2-7
system function key emulation 2-3
    P for PF key 2-3
    S for system function key 2-3
system installation 3-4

W

what to do in case of support 3-2

READER'S
COMMENT
FORM

Operator's Library: IBM 4331 Processor
Remote Operator Console Facility
Feature Description Operating Procedures
Service Representative Operations
Order No. GA33-1545

This manual is part of a library that serves as a reference source for system analysts, programmers, and operators of IBM systems. This form may be used to communicate your views about this publication. They will be sent to the author's department for whatever review and action, if any, is deemed appropriate. Comments may be written in your own language; use of English is not required.

IBM may use or distribute any of the information you supply in any way it believes appropriate without incurring any obligation whatever. You may, of course, continue to use the information you supply.

Note: *Copies of IBM publications are not stocked at the location to which this form is addressed. Please direct any requests for copies of publications, or for assistance in using your IBM system, to your IBM representative or to the IBM branch office serving your locality.*

Possible topics for comment are:

Clarity Accuracy Completeness Organization Coding Retrieval Legibility

If you wish a reply, give your name and mailing address:

_____

_____

_____

What is your occupation? _____

Number of latest Newsletter associated with this publication: _____

Thank you for your cooperation. No postage stamp is necessary if mailed in the U.S.A. (Elsewhere, an IBM office or representative will be happy to forward your comments or you may mail directly to the address in the Edition Notice on the back of the title page.)

Note: Staples can cause problems with automated mail sorting equipment.
Please use pressure sensitive or other gummed tape to seal this form.

GA33-1545

Reader's Comment Form

Cut or Fold Along Line

Fold and tape | Please Do Not Staple | Fold and tape

NO POSTAGE NECESSARY IF MAILED IN THE UNITED STATES

BUSINESS REPLY MAIL

FIRST CLASS PERMIT NO. 40 ARMONK, N.Y.

POSTAGE WILL BE PAID BY ADDRESSEE:

International Business Machines Corporation
Department 812 BP
1133 Westchester Avenue
White Plains, New York 10604

Fold and tape | Please Do Not Staple | Fold and tape

International Business Machines Corporation
Data Processing Division
1133 Westchester Avenue, White Plains, N.Y. 10604

IBM World Trade Americas/Far East Corporation
Town of Mount Pleasant, Route 9, North Tarrytown, N.Y., U.S.A 10591

IBM World Trade Europe/Middle East/Africa Corporation
360 Hamilton Avenue, White Plains, N.Y., U.S.A. 10601

Operator's Library: IBM 4331 Processor Remote Operator Console Facility Feature Description
Operating Procedures Service Representative Operations
(File No. 4300-01) Printed in U.S.A. GA33-1545

GA33-1545

Operator's Library: IBM 4331 Processor Remote Operator Console Facility Feature Description
Operating Procedures Service Representative Operations
(File No. 4300-01) Printed in U.S.A. GA33-1545

International Business Machines Corporation
Data Processing Division
1133 Westchester Avenue, White Plains, N.Y. 10604

IBM World Trade Americas/Far East Corporation
Town of Mount Pleasant, Route 9, North Tarrytown, N.Y., U.S.A 10591

IBM World Trade Europe/Middle East/Africa Corporation
360 Hamilton Avenue, White Plains, N.Y., U.S.A. 10601