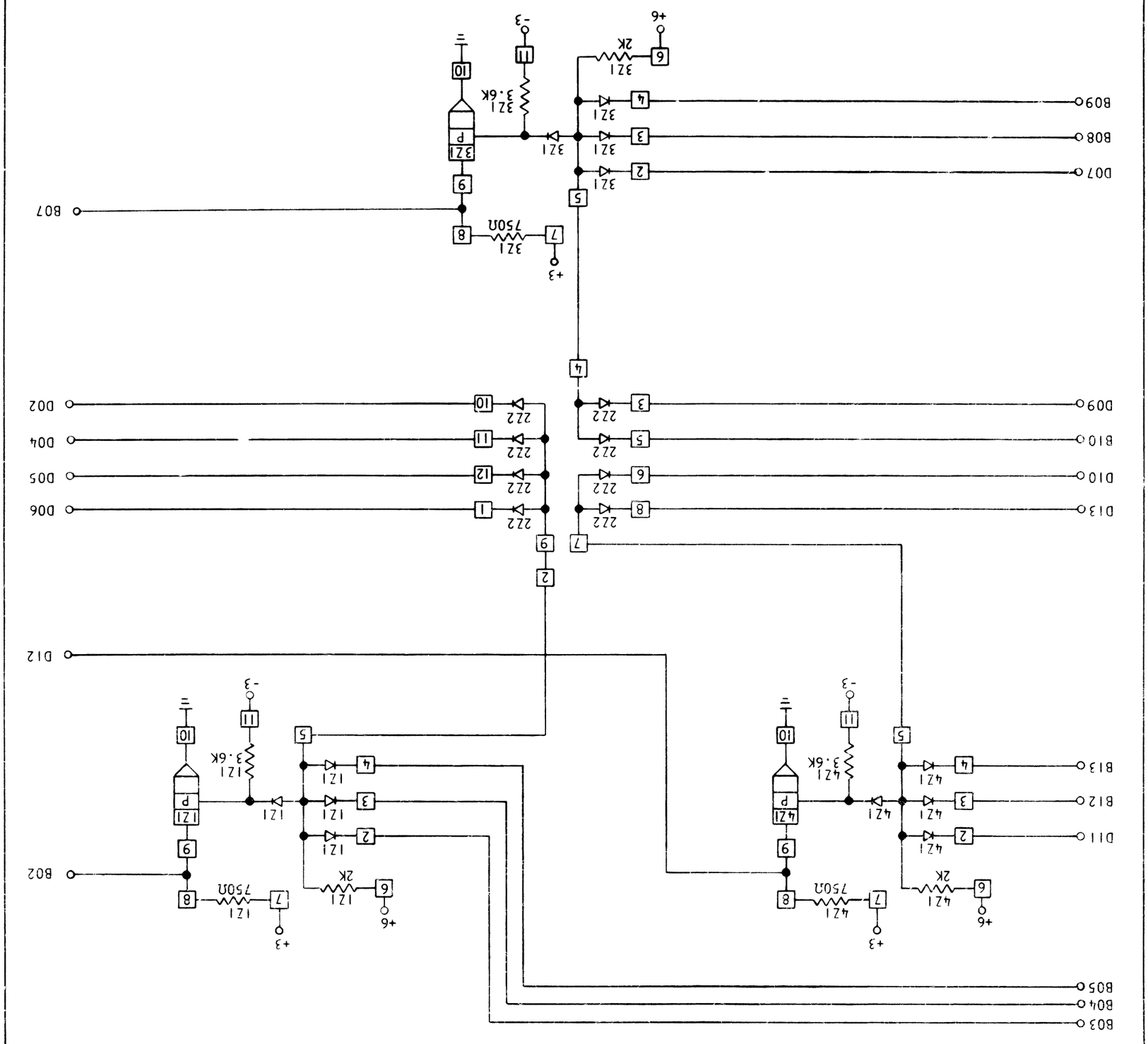

INTERNATIONAL BUSINESS MACHINES CORP.							
NAME	2 5-WAY AND ONE 7-WAY "AND" INVERT						
DESIGN		MODEL					
DETAIL	PEH	11-19-62	SCALE	NONE			
CHECK	JGZ	11-21-62	DRAW	VMD	2-20-64		
APPRO			CHECK				

DATE	CHANGE NO.	APPROVAL	DATE	CHANGE NO.	APPROVAL	DEVELOPMENT NO.
12-12-62	DEV 1119			16202		
1-8-63	DEV 1192					
1-21-63	DEV 1251					
3-13-63	DEV 1288					
3-5-64	DEV 2635					

5800247

CIRCUIT AND PACKAGING STANDARD

	DATE
APPROVAL	

STANDARDS CODE 2-7045

5800247

CARD CODE 5800247

SHEET 3 OF 3