5800346

STANDARDS CODE 2-7045

RESTRICTED

CARD CODE 5800346

SHEET 3 OF 3

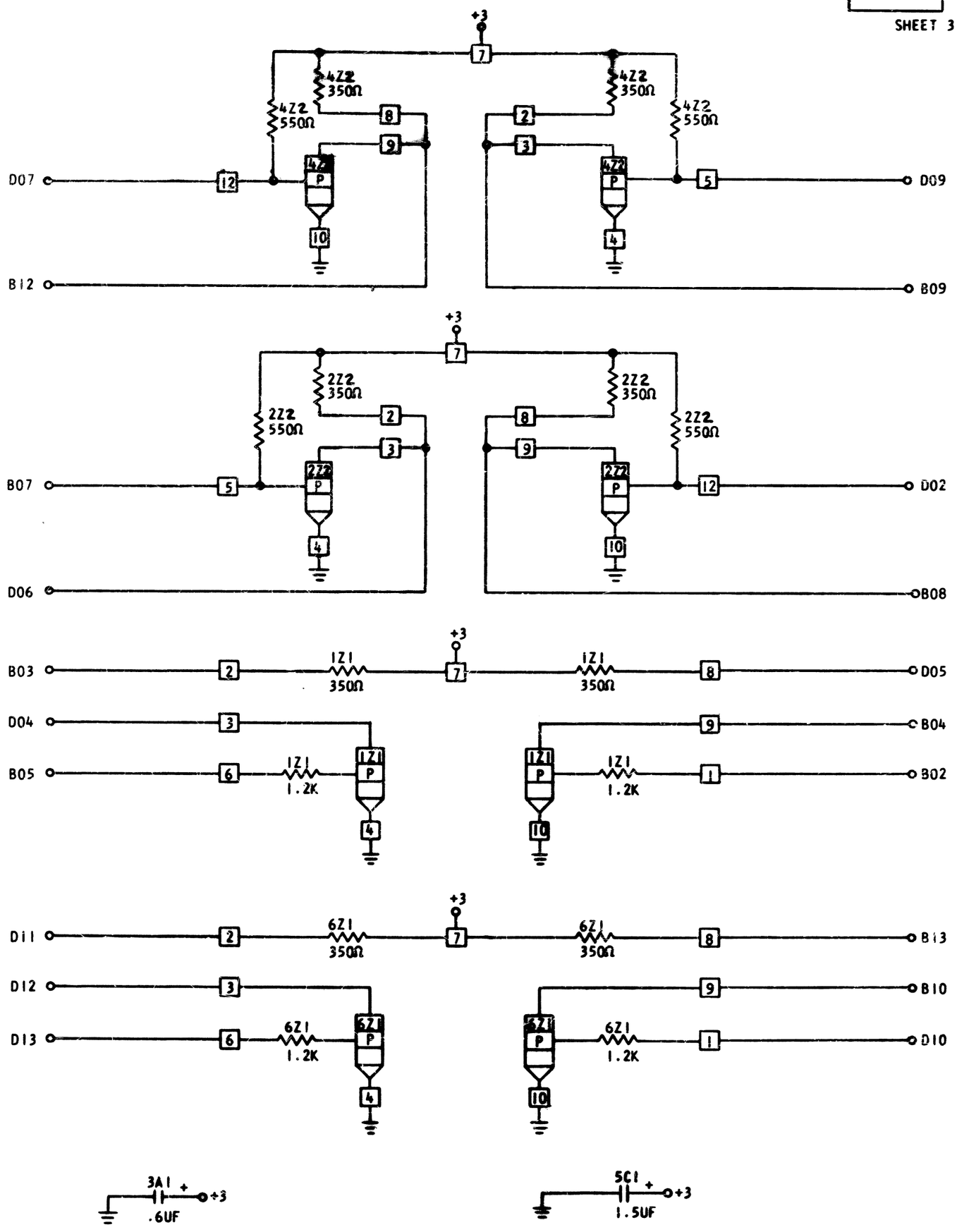

CIRCUIT AND PACKAGING STANDARD	
APPROVAL	DATE

[redacted]	DATE	CHANGE NO.	APPROVAL	DATE	CHANGE NO.	APPROVAL	DEVELOPMENT NO.
	10-10-63	[redacted] 1618					5800346
	3-11-64	160025					

C