STANDARDS CODE 2-7045

5803022

CARD CODE 5803022

SHEET 3 OF 3

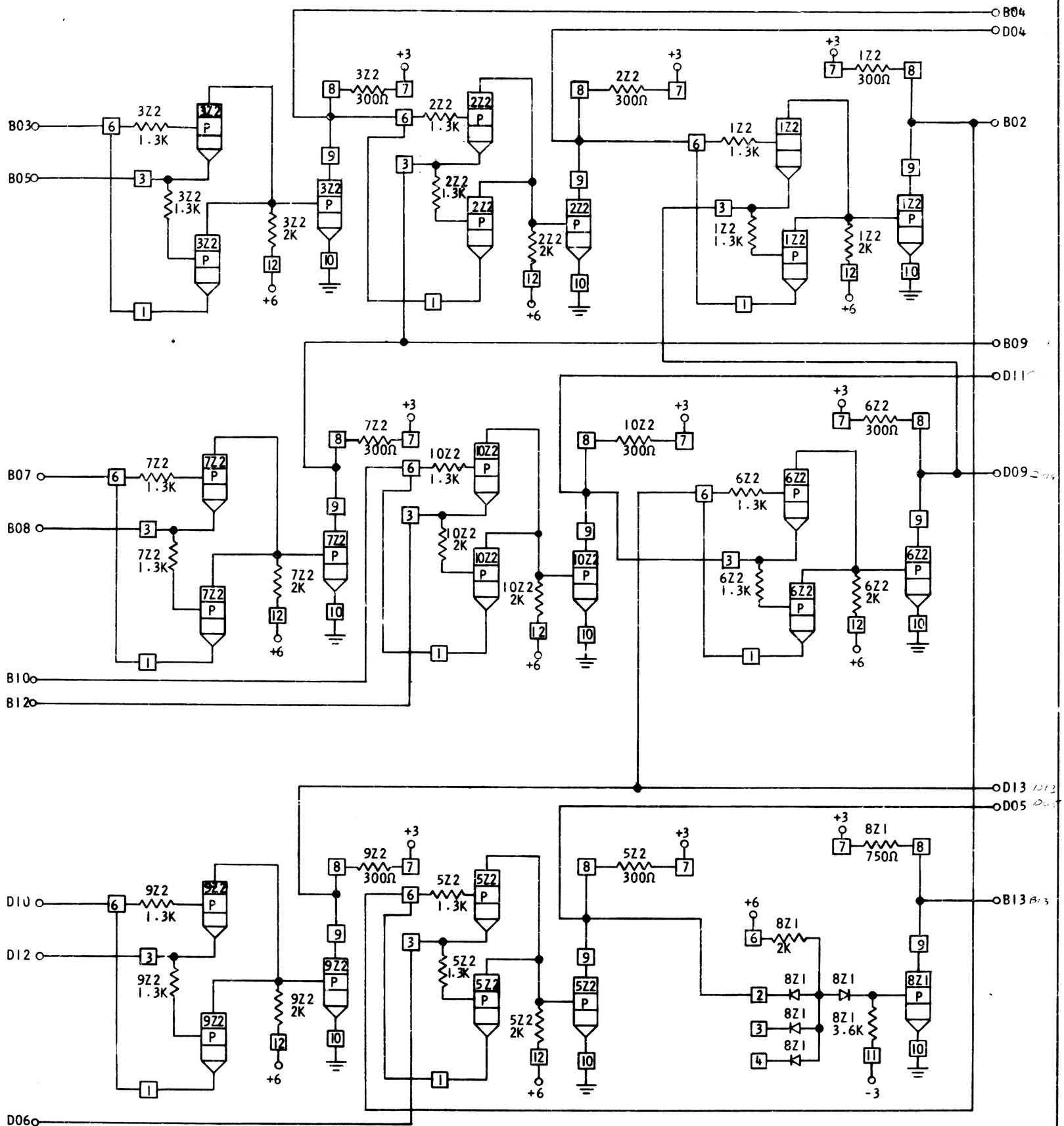

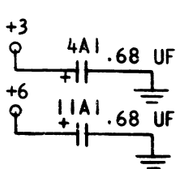

C

CIRCUIT AND PACKAGING STANDARD	
APPROVAL	DATE

INTERNATIONAL BUSINESS MACHINES CORP.													
NAME	CARD ASM NINE BIT PARITY CHECK				DATE	CHANGE NO.	APPROVAL	DATE	CHANGE NO.	APPROVAL	DEVELOPMENT NO.	5803022
DESIGN		MODEL			6/29/63	DEV 1239					SE-0097	
DETAIL		SCALE	NONE		9/12/63	DEV 1613						
CHECK		DRAW	VMO 1/7/64		8/5/64	DEV 161114						
APPRO		CHECK										