STANDARDS CODE 2-7045

5803028

CARD CODE 5803028

RESTRICTED

SHEET 3 OF 3

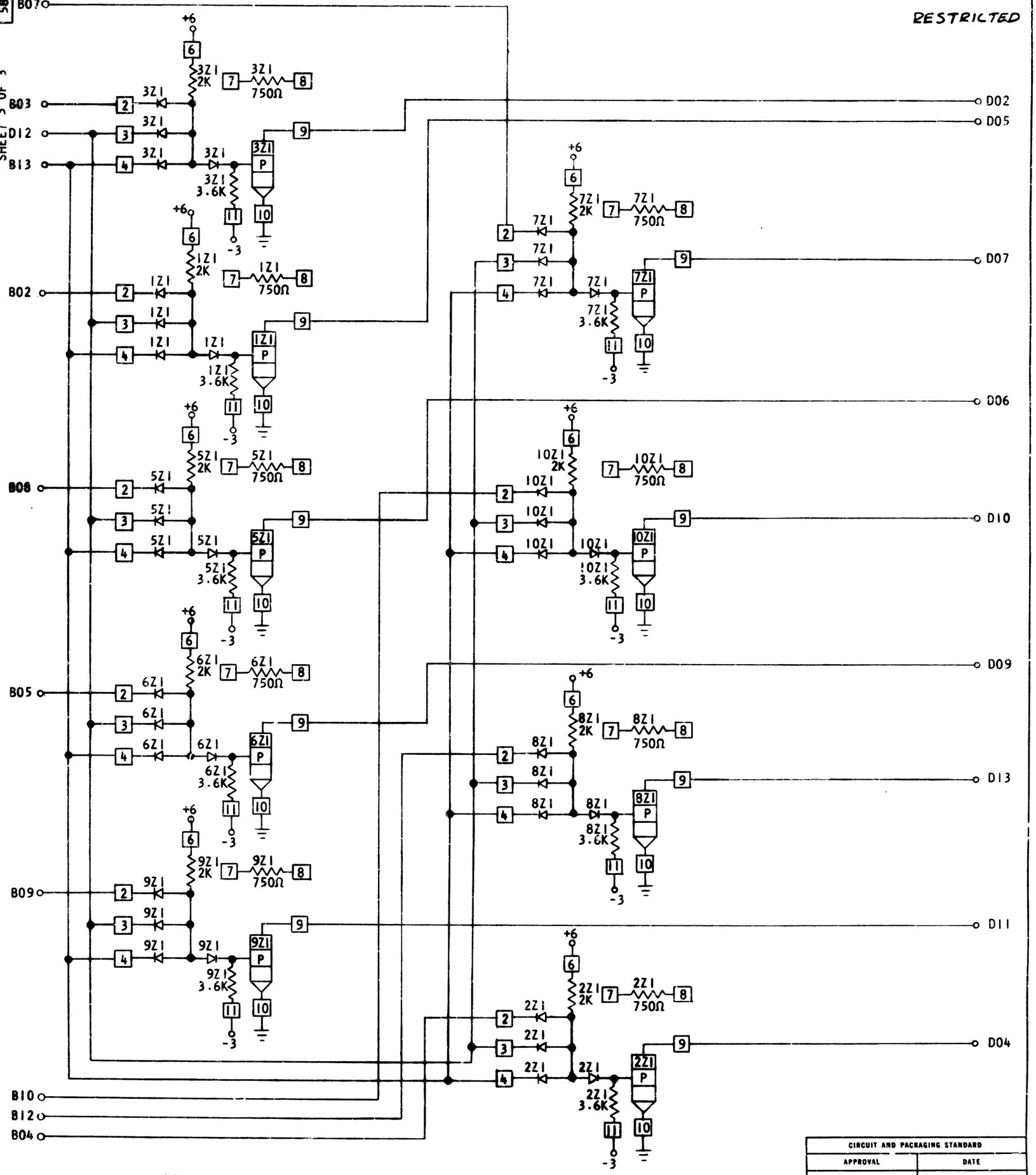

+3 — +4A1 — .68UF

CIRCUIT AND PACKAGING STANDARD	
APPROVAL	DATE

INTERNATIONAL BUSINESS MACHINES CORP.												
NAME	CARD ASM - I INPUT ASSEMBLER NO LOAD				DATE	CHANGE NO.	APPROVAL	DATE	CHANGE NO.	APPROVAL	DEVELOPMENT NO.	5803028
DESIGN			MODEL		7-12-63	DEV2382						
DETAIL	JMR 5-25-63		SCALE	NONE	2-4-64	DEV2433						
CHECK	AD 7-8-63		DRAW	[illegible]	3-12-64	160032						
APPRO	AEN 3-2-64		CHECK	[illegible]	12AUG65	165438	B					

C