STANDARDS CODE

SHEET 3 OF 3 RESTRICTED

CARD CODE 5803466

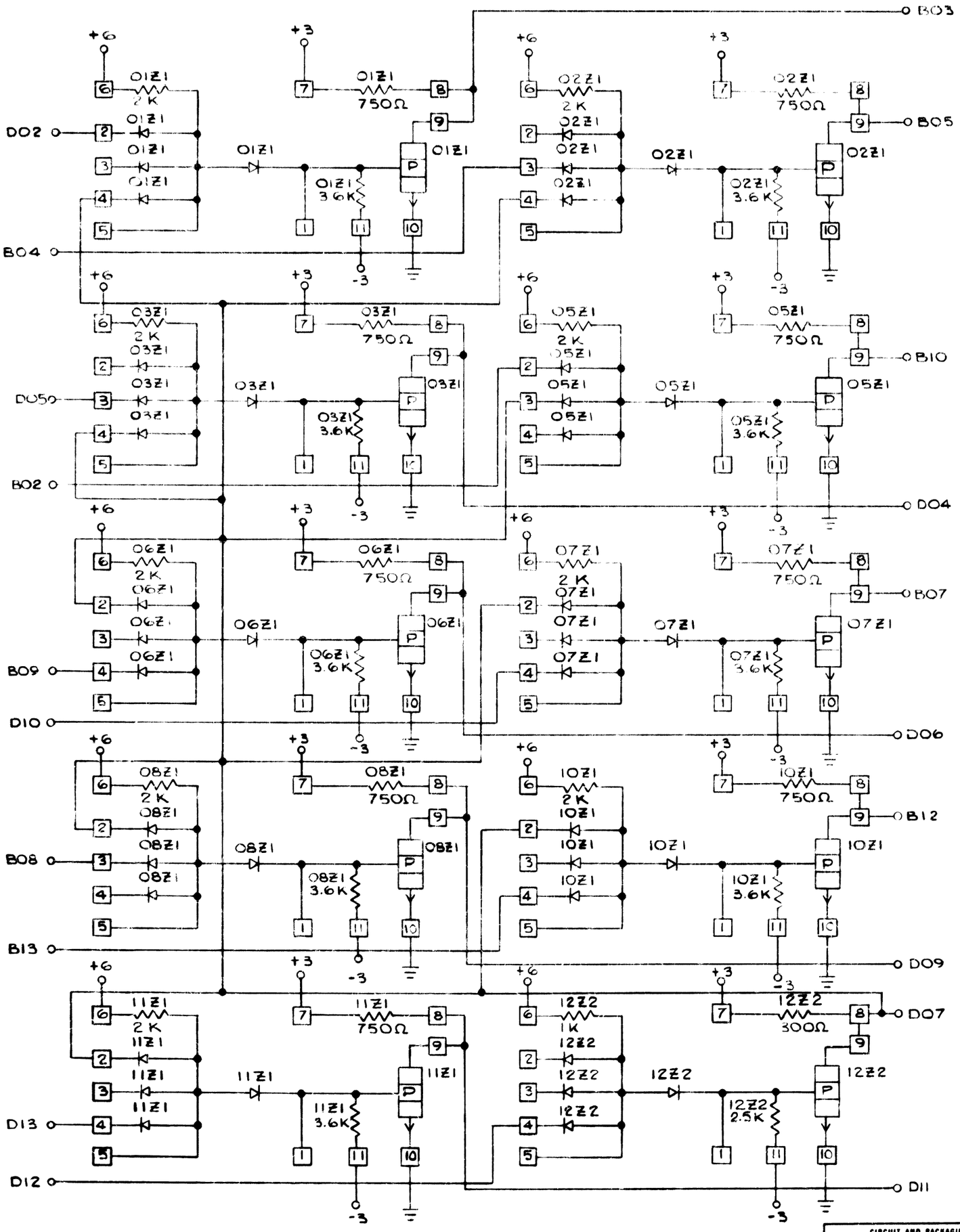

+6 — 13A1 .68 UF

-3 — 09A1 .68 UF

+3 — 04A1 .68 UF

INTERNATIONAL BUSINESS MACHINES CORP.	DATE	CHANGE NO.	APPROVAL	DATE	CHANGE NO.	APPROVAL	DEVELOPMENT NO.
NAME 9-2 WAY AND + POWER INVERTER	1-17-64	DEY 2118					
DESIGN PS 11-6-63 MODEL							
DETAIL RT 11-6-63 SCALE	4-11-64	161249					
CHECK FC 1-7-64 DRAW EDD 1-4-64	1-8-65	162723					
APPRO LEK 1-7-64 CHECK							

CIRCUIT AND PACKAGING STANDARD

APPROVAL	DATE

5803466

C