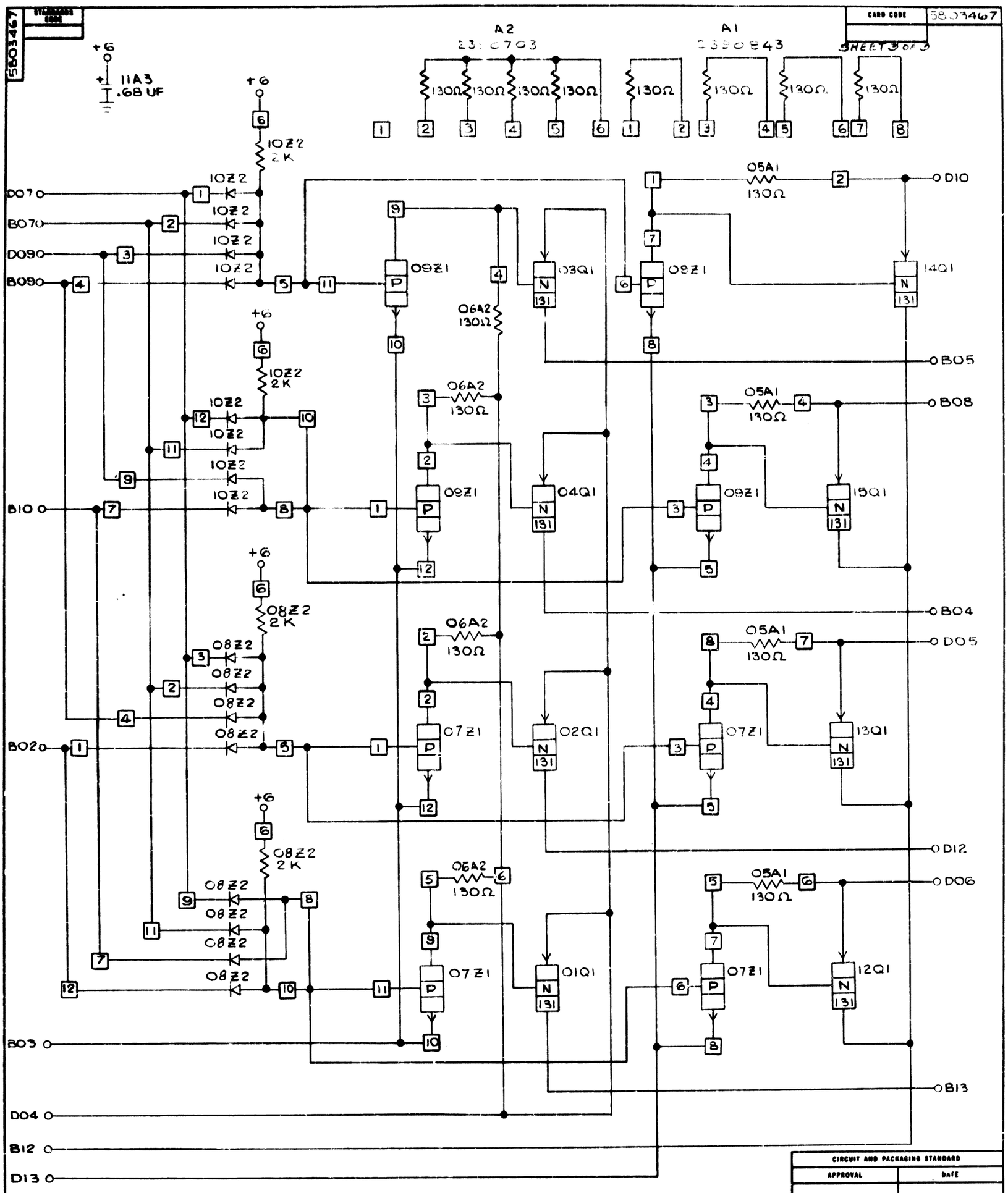

CIRCUIT AND PACKAGING STANDARD	
APPROVAL	DATE

INTERNATIONAL BUSINESS MACHINES CORP.														
NAME	DRIVER GATE					DATE	CHANGE NO.	APPROVAL	DATE	CHANGE NO.	APPROVAL	DEVELOPMENT NO.	5803467
DESIGN	VAB 10-14-1	MODEL				01-21-64	DEV 2119						
DETAIL	RDD 1-46A	SCALE					DEV 2014						
CHECK	R 4-20-4	DRAW				05-15-64	160280						
APPRO		CHECK				5-25-64	160517						

C