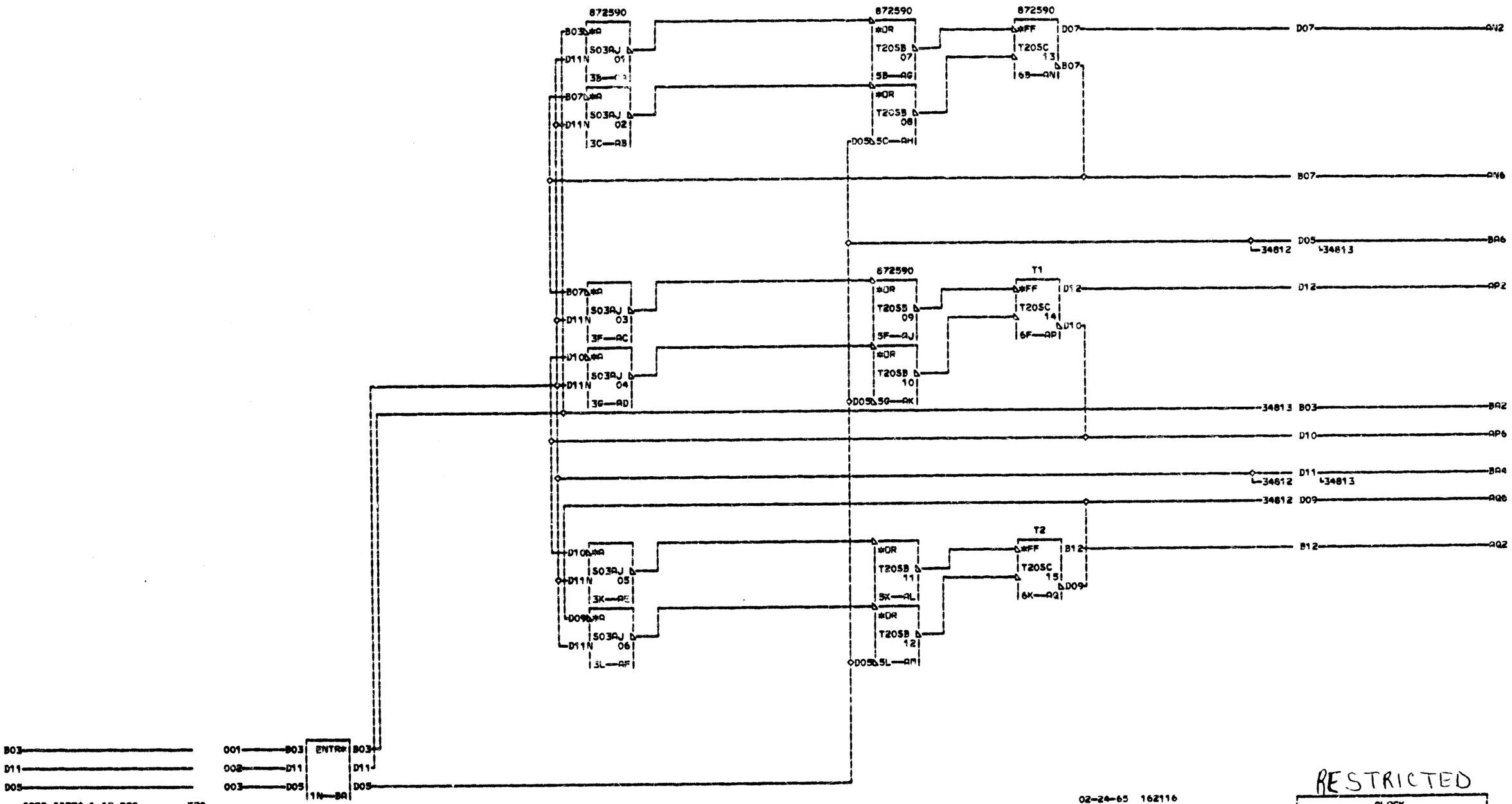

RESTRICTED

CLOCK			
DATE 02-01-65	MACH. ASSEMBLY		3 4 8 1 1 000
LOG 012A	FRAME		
	P.N. 5803481		
IBM CORP. SD	BLK.	BB	