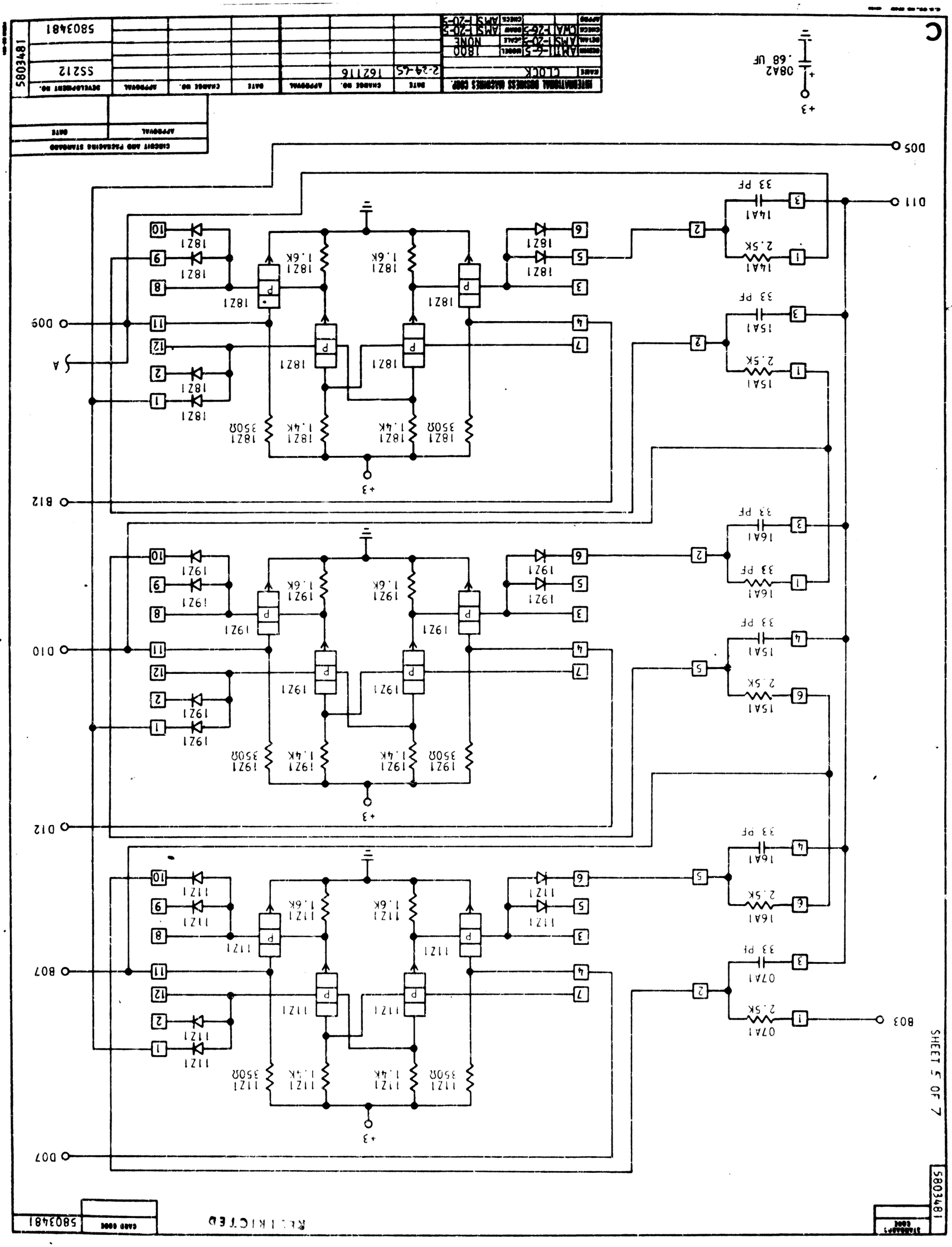
INTERNATIONAL BUSINESS MACHINES CORP.
NAME CLOCK
DATE 2-24-65
CHANGE NO. 162116
APPROVAL
DATE
CHANGE NO.
APPROVAL
DATE
DEVELOPMENT NO. SS212
5803481
DESIGN AM111-6-5
MODEL 1800
DETAIL AMS1-20-3
SCALE NONE
CHECK CMA1-26-3
DRAWN AMS1-20-3
CHECK AMS1-20-3
APPROV
CIRCUIT AND PACKAGING STANDARD
APPROVAL
DATE
+3
.68 UF
08A2
D05
D11
D09
A
B12
D10
D12
B07
D07
B03
SHEET 5 OF 7
5803481
RESTRICTED