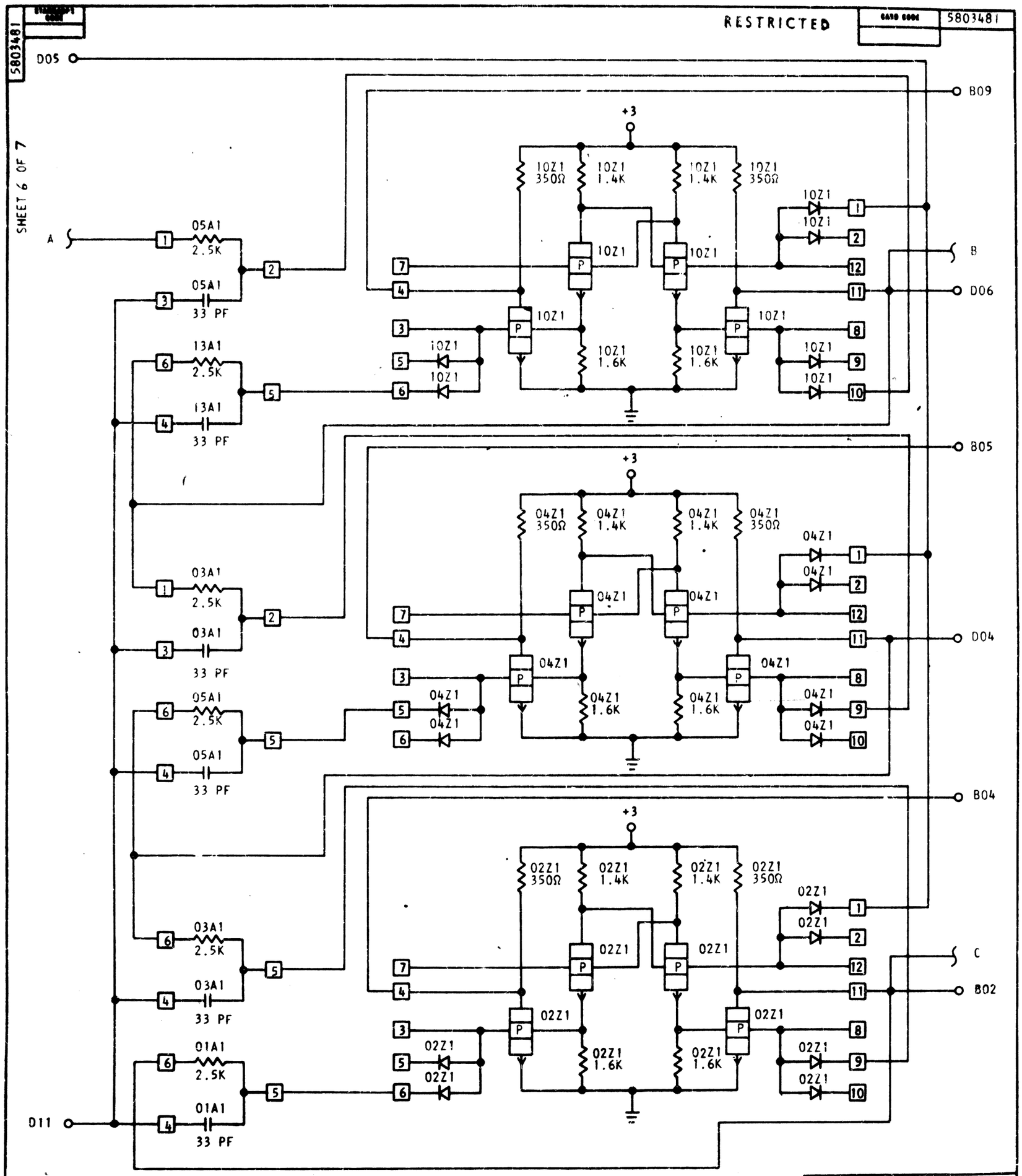

CIRCUIT AND PACKAGING STANDARD	
APPROVAL	DATE

INTERNATIONAL BUSINESS MACHINES CORP.				DATE	CHANGE NO.	APPROVAL	DATE	CHANGE NO.	APPROVAL	DEVELOPMENT NO.
NAME	CLOCK			2-24-65	162116					SS212
DRAWN	AMJ 11-6-5	MODEL	1800							
DETAIL	AMS 1-20-5	SCALE	NONE							
CHECK	CWA 1-24-5	DRAW	AMS 1-20-5							5803481
APPRD		CHECK	AMS 1-20-5							

5803481

C