STANDARDS CODE

5803491

SHEET 3 OF 3

SHEET 3 OF 3

CARD CODE 5803491

RESTRICTED

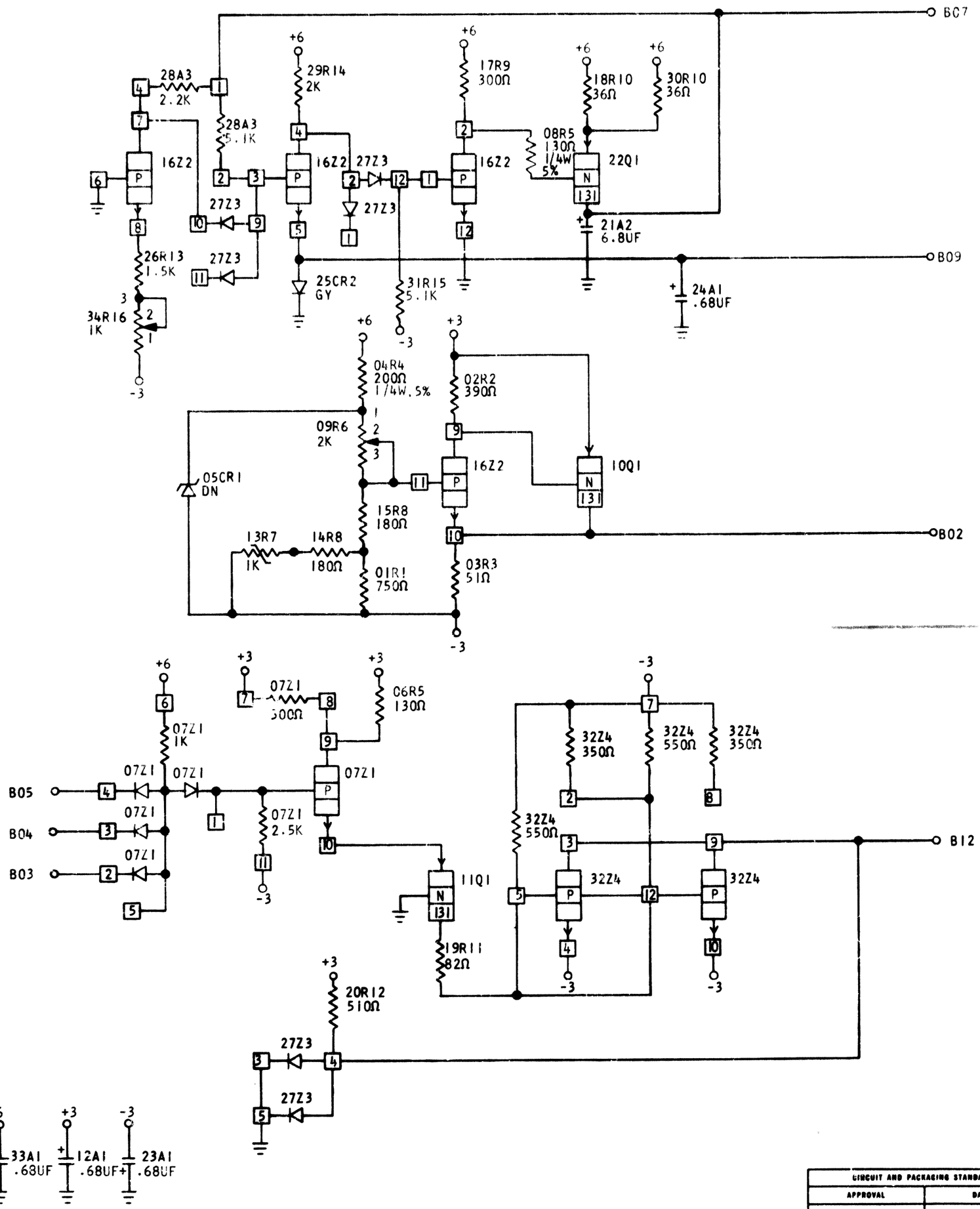

CIRCUIT AND PACKAGING STANDARD	
APPROVAL	DATE

INTERNATIONAL BUSINESS MACHINES CORP.						DATE	CHANGE NO.		APPROVAL	DATE	CHANGE NO.	APPROVAL	DEVELOPMENT NO.	5803491
NAME	VOLTAGE REF AND SENSE CONTROL					10-8-69	DEV 2772	/					SS477	
DESIGN	RT	8-26-4	MODEL	1130		3-8-65	162864	A						
DETAIL	EDD	9-1-4	SCALE			6-23-65	164537	B						
CHECK	RT	9-3-4	DRAW	VE	3-8-65	4APR67	166667	C					5803491	
APPRO			CHECK											

C