5 803 656

STANDARDS CODE 2-7045

SHEET 3 OF 3

CARD CODE 3656

5 803 656

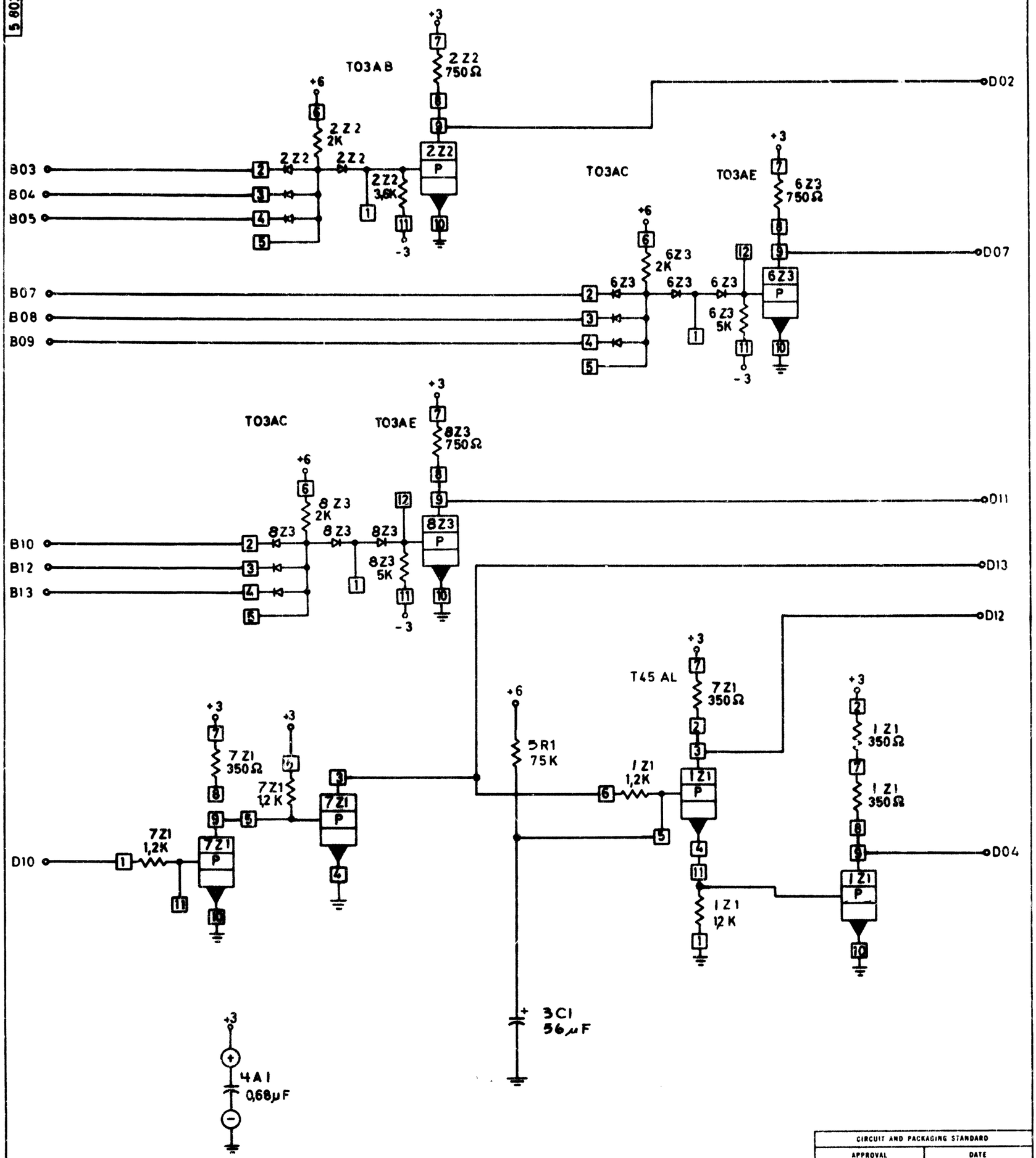

CIRCUIT AND PACKAGING STANDARD	
APPROVAL	DATE

INTERNATIONAL BUSINESS MACHINES CORP.				DATE	CHANGE NO.	APPROVAL	DATE	CHANGE NO.	APPROVAL	DEVELOPMENT NO.
NAME	MOTOR DELAY 55A			09-25-64	160 672					
				26AUG65	165037 B					
DESIGN	DEPT10-B-64	MODEL	2020	30CT66	167538 C					
DETAIL	KEL 9-8-64	SCALE	NONE							
CHECK	[redacted]	DRAW								5803 656
APPRO	[redacted]	CHECK								

5 803 656

C