STANDARDS CODE

5803757

SHEET 4 OF 4

CARD CODE 5803757

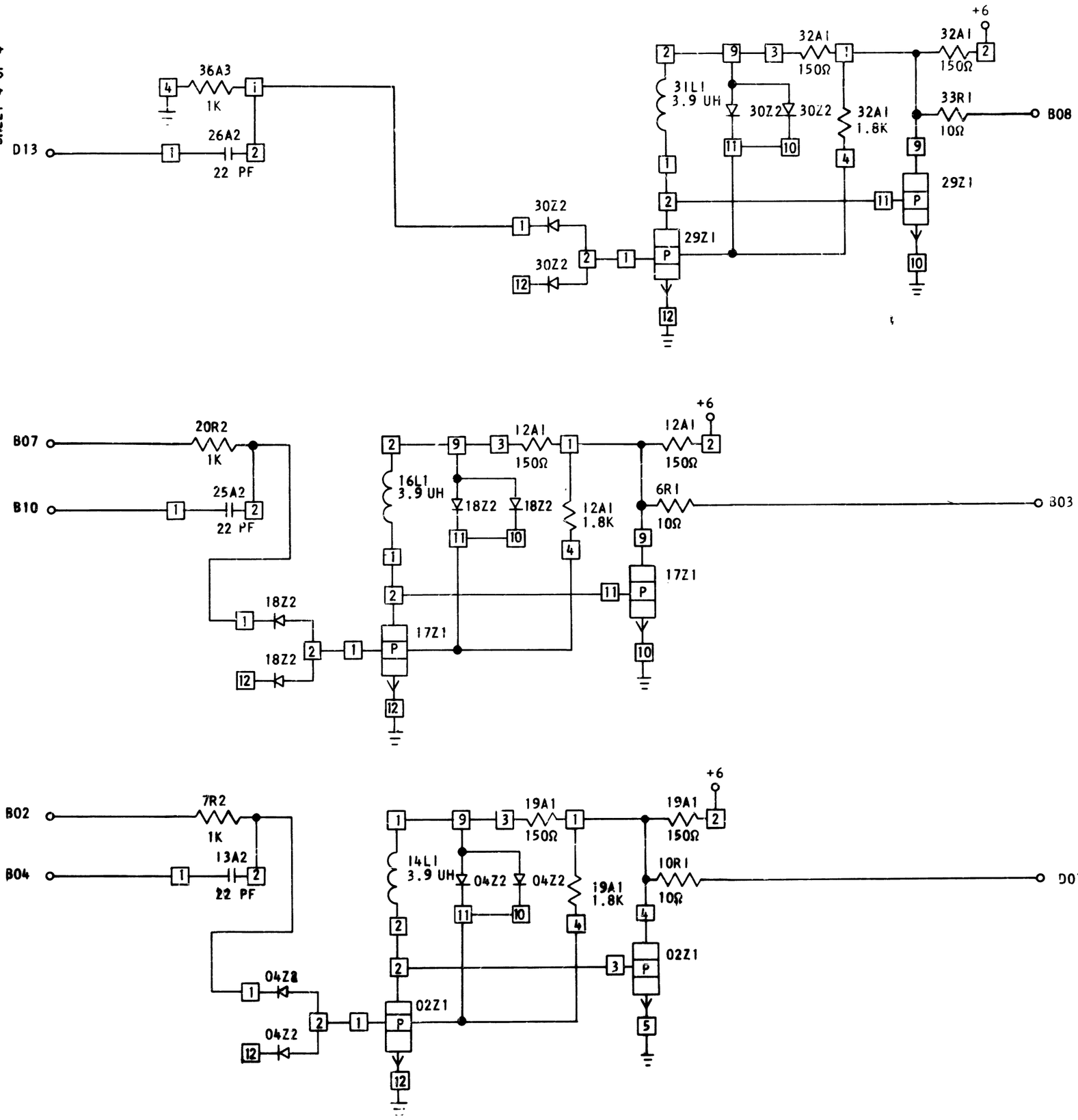

CIRCUIT AND PACKAGING STANDARD	
APPROVAL	DATE

INTERNATIONAL BUSINESS MACHINES CORP

NAME	SAMPLE PULSE DRIVER		
DESIGN	MTI 1-4-5	MODEL	MOD NONE
DETAIL	LF 2-27-5	SCALE	
CHECK	TH 3-4-5	DRAW	LF 2-27-5
APPRO	RFC 5-6-5	CHECK	

DATE	CHANGE NO.		APPROVAL	DATE	CHANGE NO.	APPROVAL	DEVELOPMENT NO.
2-24-65	163293	A					SS313
1MAY67	169949	B					
							5803757

5803757

C