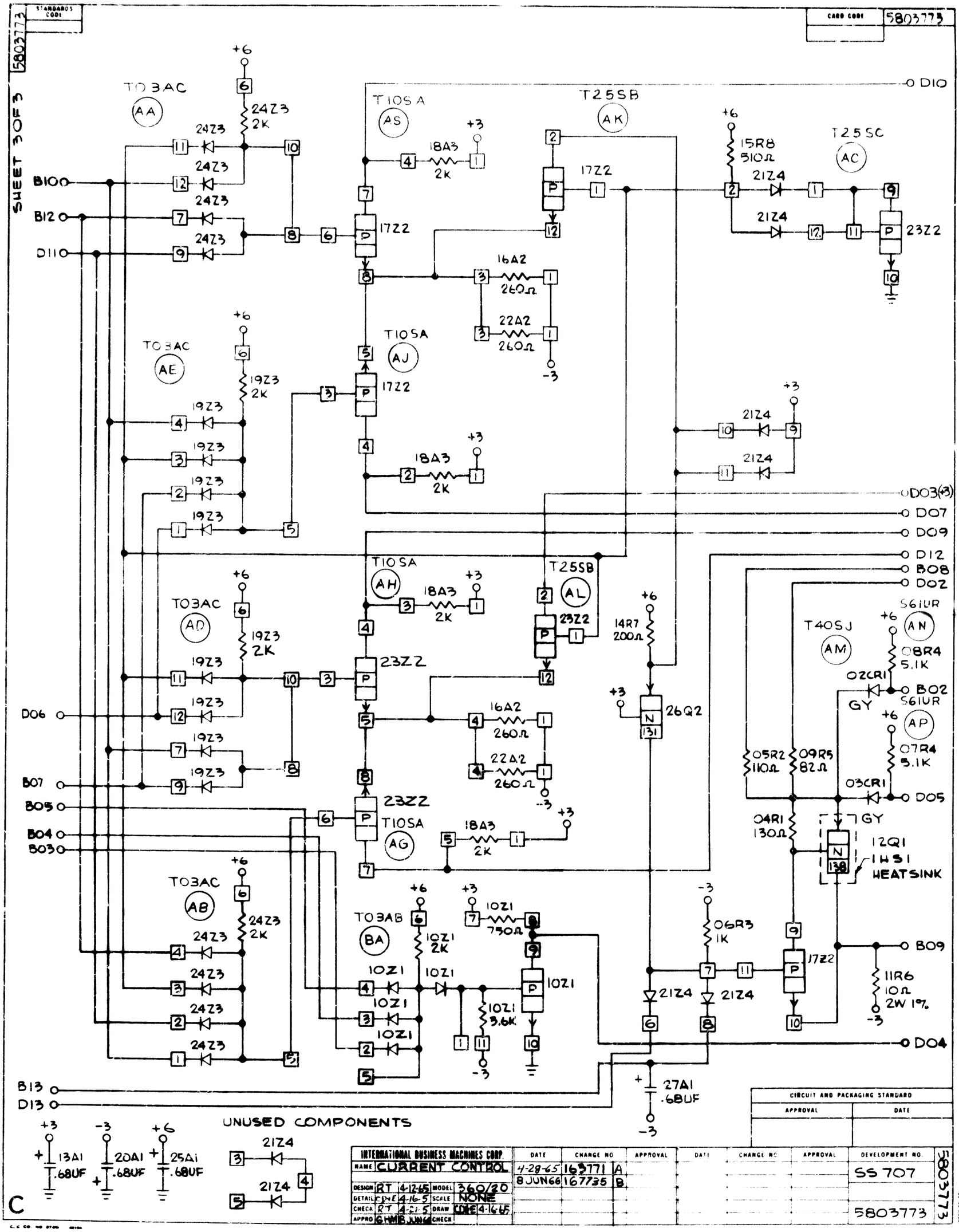
STANDARDS CODE
5803773
CARD CODE
5803773
SHEET 3 OF 3
T03AC
AA
24Z3
2K
T10SA
AS
18A3
2K
T25SB
AK
17Z2
15R8
510Ω
21Z4
T25SC
AC
23Z2
16A2
260Ω
22A2
260Ω
T03AC
AE
19Z3
2K
T10SA
AJ
T03AC
AD
T10SA
AH
T25SB
AL
23Z2
14R7
200Ω
26Q2
T40SJ
AM
S61UR
AN
08R4
5.1K
02CR1
GY
B02
S61UR
AP
07R4
5.1K
05R2
110Ω
09R5
82Ω
03CR1
04R1
130Ω
12Q1
1HS1
HEATSINK
T10SA
AG
T03AC
AB
T03AB
BA
10Z1
2K
10Z1
750Ω
10Z1
3.6K
06R3
1K
17Z2
11R6
10Ω
2W 1%
27A1
.68UF
13A1
.68UF
20A1
.68UF
25A1
.68UF
UNUSED COMPONENTS
21Z4
B100
B12
D11
D06
B07
B05
B04
B03
B13
D13
D10
D03(+3)
D07
D09
D12
B08
D02
B09
D05
D04
CIRCUIT AND PACKAGING STANDARD
APPROVAL
DATE
INTERNATIONAL BUSINESS MACHINES CORP.
NAME CURRENT CONTROL
DESIGN RT 4-12-65
MODEL 360/20
DETAIL
SCALE NONE
CHECK RT 4-21-5
DRAW
APPRO
CHECK
DATE
CHANGE NO
APPROVAL
DEVELOPMENT NO.
4-28-65 163771 A
8 JUN66 167735 B
SS 707
5803773
C