STANDARDS CODE

CARD CODE

RESTRICTED

SHEET 3 OF 3

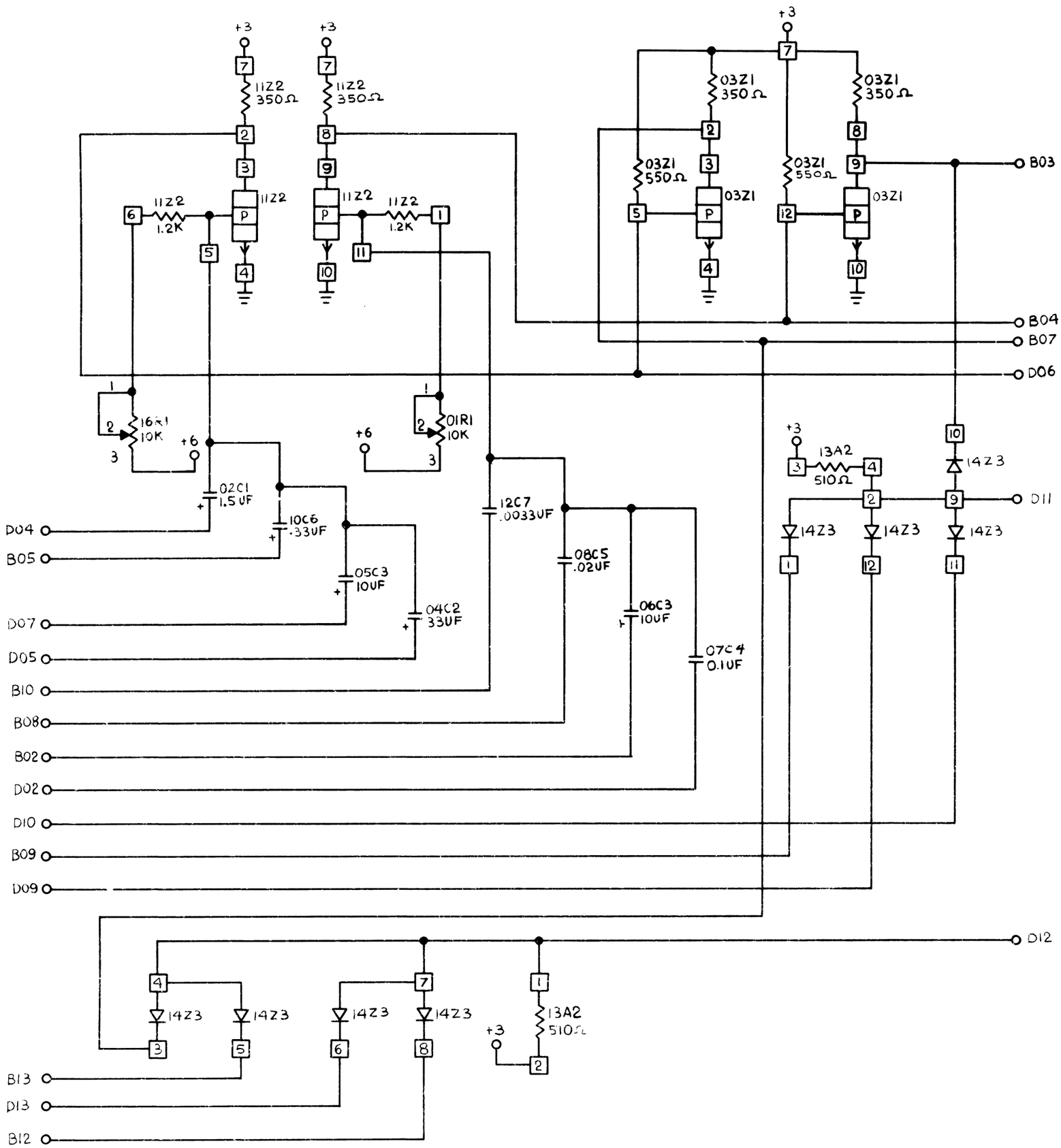


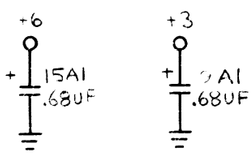


| CIRCUIT AND PACKAGING STANDARD | |
|---|---|
| APPROVAL | DATE |
| | |

| INTERNATIONAL BUSINESS MACHINES CORP | DATE | CHANGE NO. | APPROVAL | DATE | CHANGE NO. | APPROVAL | DEVELOPMENT NO. |
|---|---|---|---|---|---|---|---|
| NAME TWO VARIABLE SINGLE SHOTS | 5-25-65 | 163093A | | | | | SS614 |
| DESIGN PND 12-11-64 MODEL | | | | | | | |
| DETAIL SCALE | | | | | | | |
| CHECK DRAW 5-3-65 | | | | | | | 5803316 |
| APPRO CHECK | | | | | | | |

5183085