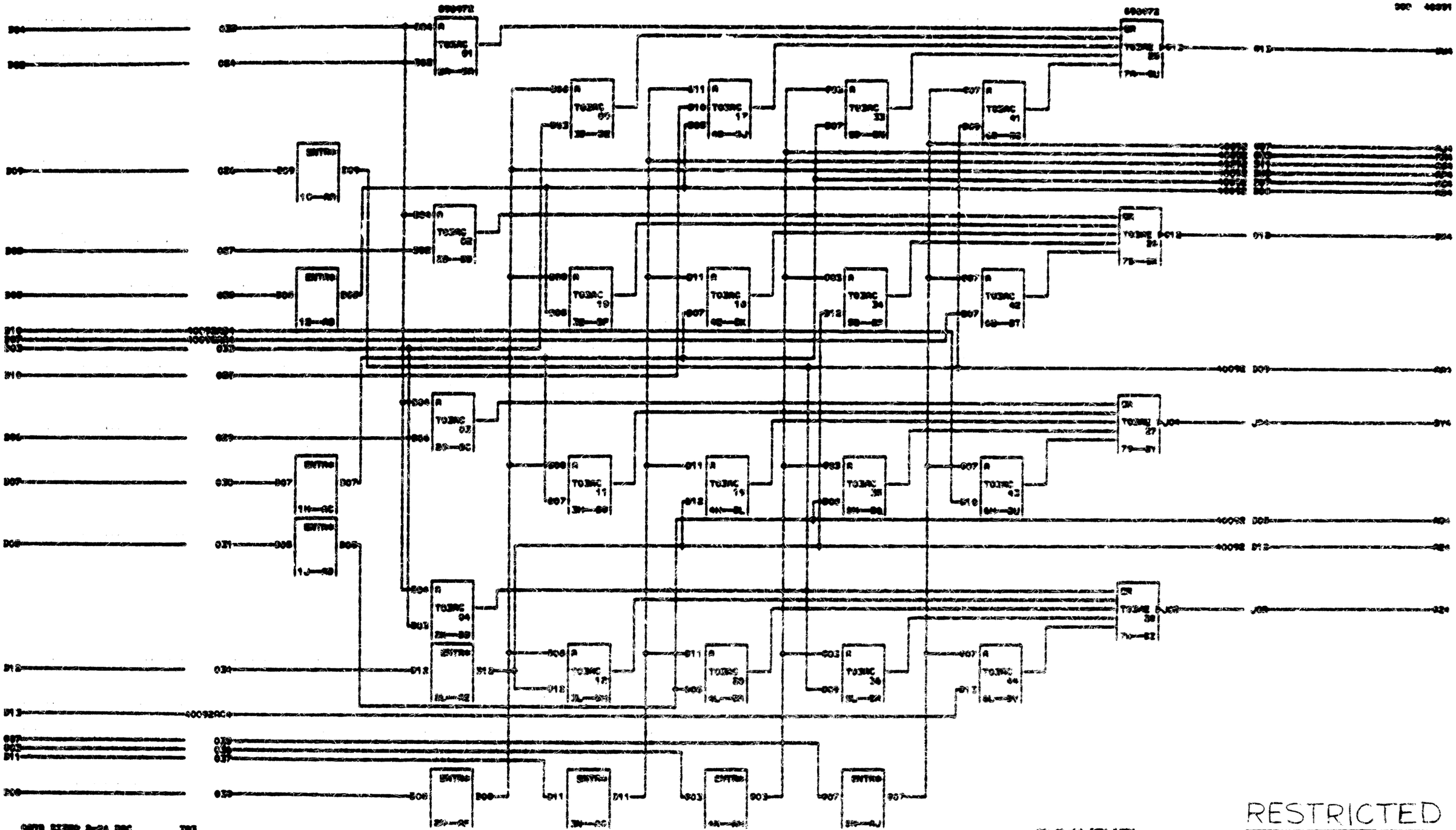

RESTRICTED

ADDER SHEET CARD

DATE 06-01-64 ENGR. RESERVLY

LOG 151 FRAME

CD PG 1 OF 2 PGS. 0600009

IBM CORP. FD BLK. CR