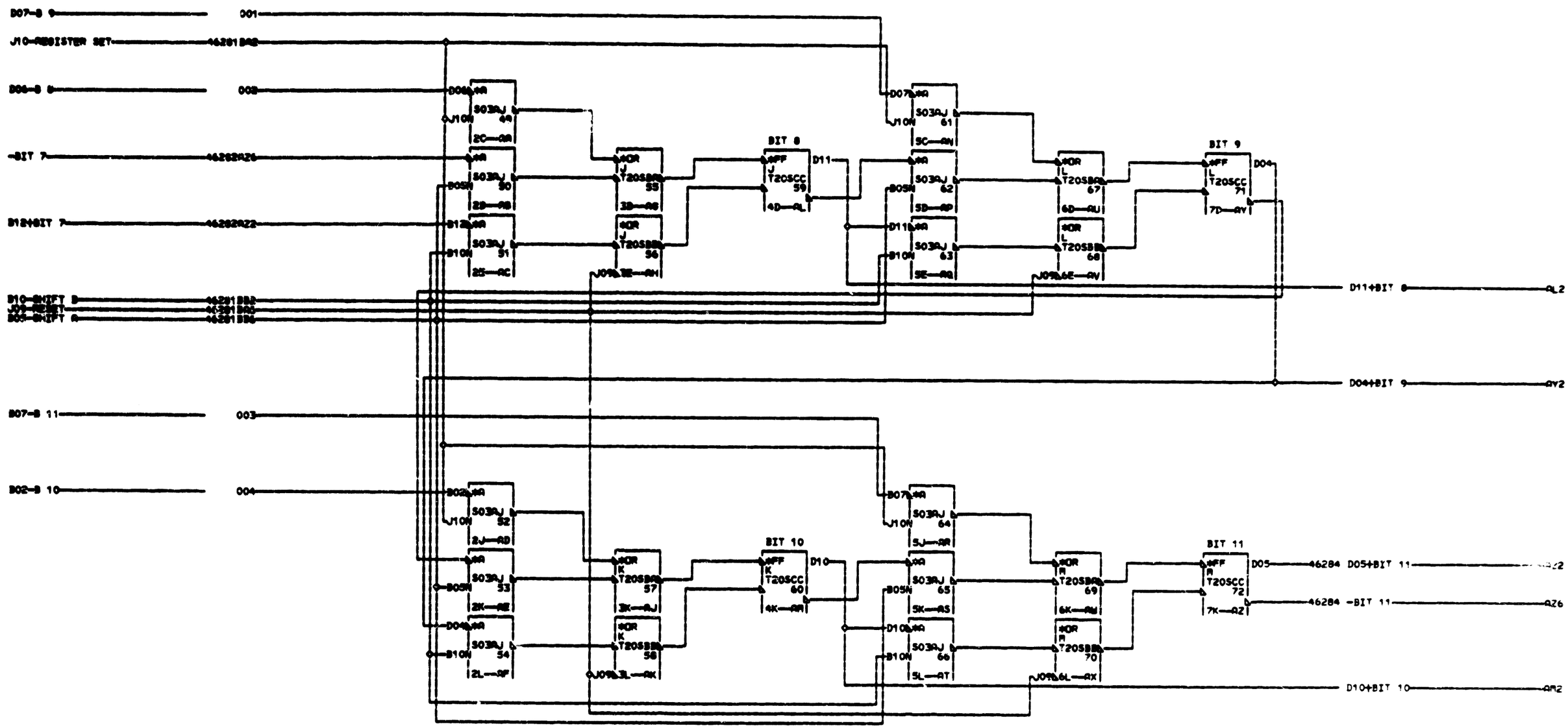

02-24-65 163068 A
09-10-65 169522 B
02-23-68 173122 C

FILE SHIFT REGISTER 16 BITS	
DATE 07-30-68 MACH. ASSEMBLY	4
LOG 200A FRAME	6
P. N. 5804628	2
	8
	3
IBM CORP. SD BLK. BA	000

4
6
2
8
3
000