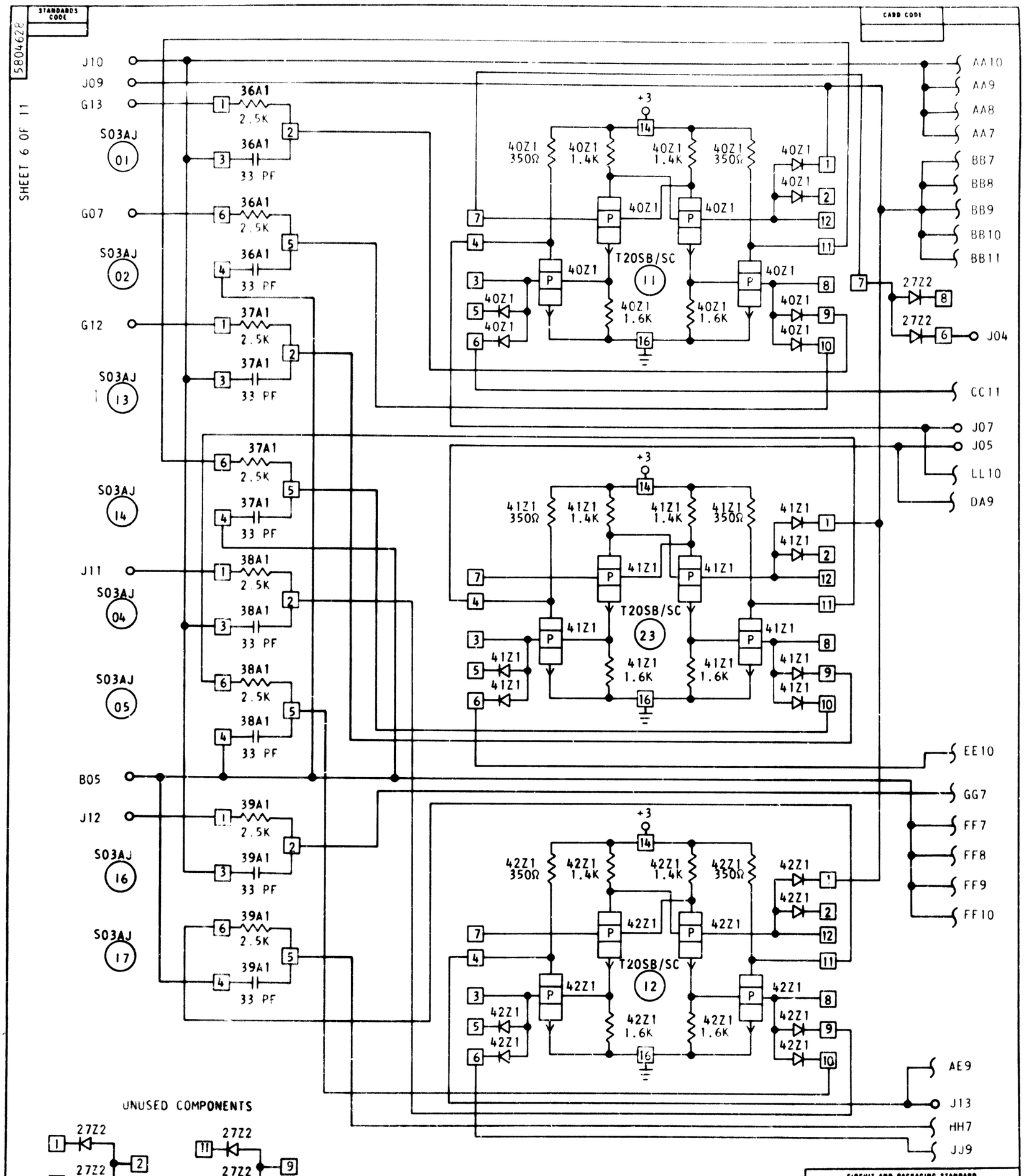
STANDARDS CODE
CARD CODE
5804628
SHEET 6 OF 11
J10
J09
G13
G07
G12
J11
B05
J12
S03AJ 01
S03AJ 02
S03AJ 13
S03AJ 14
S03AJ 04
S03AJ 05
S03AJ 16
S03AJ 17
36A1 2.5K
36A1 33 PF
37A1 2.5K
37A1 33 PF
38A1 2.5K
38A1 33 PF
39A1 2.5K
39A1 33 PF
+3
40Z1 350Ω
40Z1 1.4K
40Z1 1.6K
T20SB/SC 11
41Z1 350Ω
41Z1 1.4K
41Z1 1.6K
T20SB/SC 23
42Z1 350Ω
42Z1 1.4K
42Z1 1.6K
T20SB/SC 12
27Z2
AA10
AA9
AA8
AA7
BB7
BB8
BB9
BB10
BB11
J04
CC11
J07
J05
LL10
DA9
EE10
GG7
FF7
FF8
FF9
FF10
AE9
J13
HH7
JJ9
UNUSED COMPONENTS
31A2 .68UF
09A2 .68UF
(GND) D08 AND J08 ARE BUSSED
(+3V) D03 AND J03 ARE NOT BUSSED
CIRCUIT AND PACKAGING STANDARD
APPROVAL
DATE
INTERNATIONAL BUSINESS MACHINES CORP.
NAME FILE SHIFT REGISTER 16 BITS
DESIGN PND 2-1-5
DETAIL JV 3-9-5
CHECK
APPRD REC 13AUG65
MODEL 1800
SCALE NONE
DRAW CPE 3-9-5
CHECK
DATE
CHANGE NO.
APPROVAL
DATE
CHANGE NO
APPROVAL
DEVELOPMENT NO.
3-25-65 163068 A
13OCT65 165522 B
23FEB68 173122 C
SS394
5804628
C