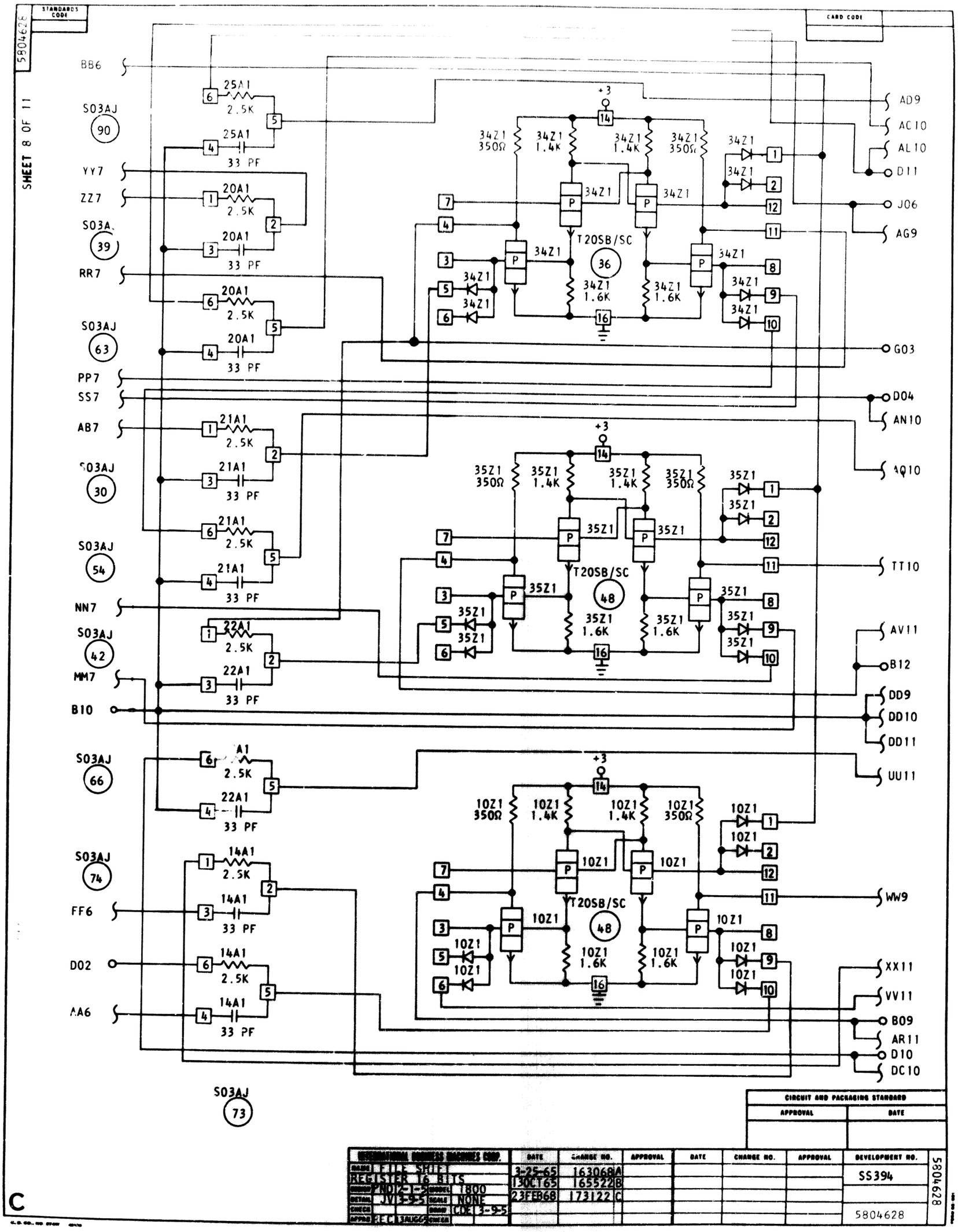
STANDARDS CODE
5804628
SHEET 8 OF 11
CARD CODE
BB6
S03AJ 90
YY7
ZZ7
S03A 39
RR7
S03AJ 63
PP7
SS7
AB7
S03AJ 30
S03AJ 54
NN7
S03AJ 42
MM7
B10
S03AJ 66
S03AJ 74
FF6
D02
AA6
S03AJ 73
25A1 2.5K
25A1 33 PF
20A1 2.5K
20A1 33 PF
20A1 2.5K
20A1 33 PF
21A1 2.5K
21A1 33 PF
21A1 2.5K
21A1 33 PF
22A1 2.5K
22A1 33 PF
A1 2.5K
22A1 33 PF
14A1 2.5K
14A1 33 PF
14A1 2.5K
14A1 33 PF
+3
34Z1 350Ω
34Z1 1.4K
34Z1 1.4K
34Z1 350Ω
34Z1
T20SB/SC 36
34Z1 1.6K
34Z1 1.6K
35Z1 350Ω
35Z1 1.4K
35Z1 1.4K
35Z1 350Ω
35Z1
T20SB/SC 48
35Z1 1.6K
35Z1 1.6K
10Z1 350Ω
10Z1 1.4K
10Z1 1.4K
10Z1 350Ω
10Z1
T20SB/SC 48
10Z1 1.6K
10Z1 1.6K
AD9
AC10
AL10
D11
J06
AG9
G03
D04
AN10
AQ10
TT10
AV11
B12
DD9
DD10
DD11
UU11
WW9
XX11
VV11
B09
AR11
D10
DC10
CIRCUIT AND PACKAGING STANDARD
APPROVAL
DATE
INTERNATIONAL BUSINESS MACHINES CORP.
NAME FILE SHIFT REGISTER 16 BITS
MODEL 1800
SCALE NONE
CODE 3-9-5
DATE 3-25-65 130CT65 23FEB68
CHANGE NO. 163068A 165522B 173122C
DEVELOPMENT NO. SS394
5804628
C