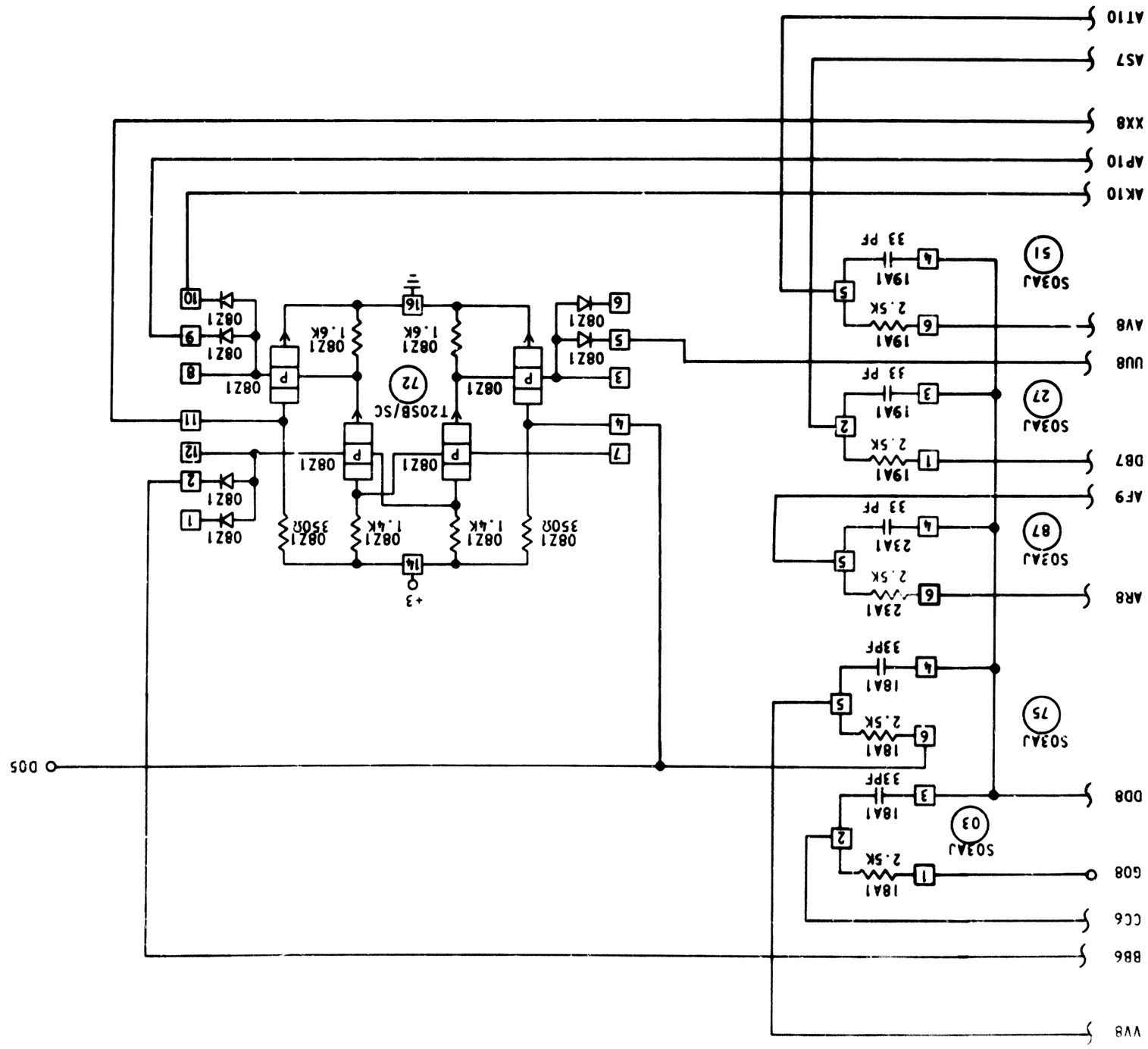

DATE	CHANGE NO.	APPROVAL	DATE	CHANGE NO.	APPROVAL	DEVELOPMENT NO.
3-25-65	163068 A					5S394
130CT65	165522 B					
23FEB66	173122 C					5804628

CIRCUIT AND PACKAGING STANDARD	
APPROVAL	DATE

SHEET 11 OF 11

5804628

CAGE CODE 5804628