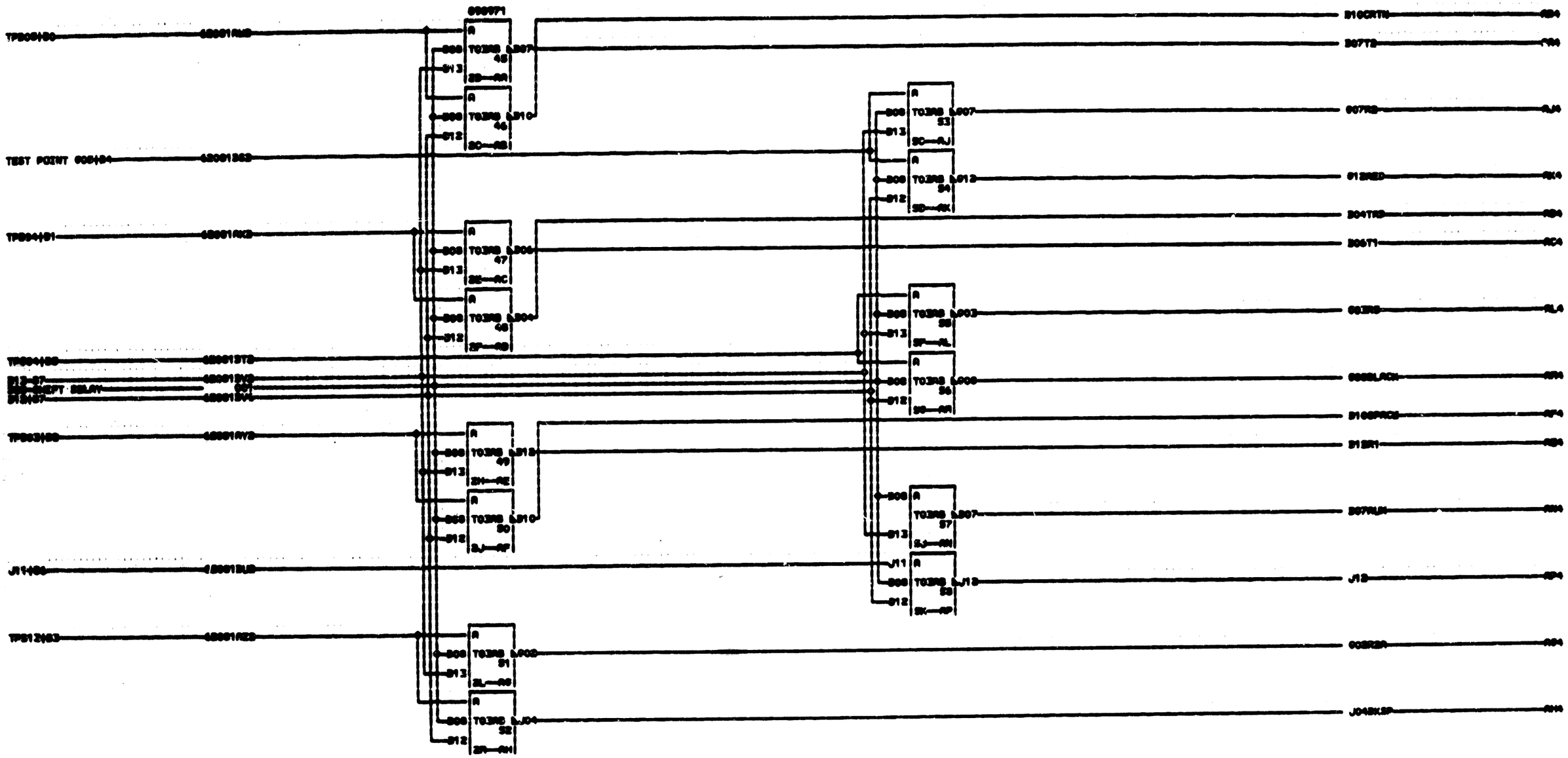

CARD SIZE 2-84PAC T66
VOLTAGE FUNC
RESTRICTED
WITH ASSUP CRP

03-04-65 163203 A

GATED BUFFER
DATE 03-23-65 MACH. ASSEMBLY
LOG 0648 FRAME
P.No. 5806208
IBM CORP. SD WLK. RQ

000