5806208

RESTRICTED

SHEET 8 OF 9

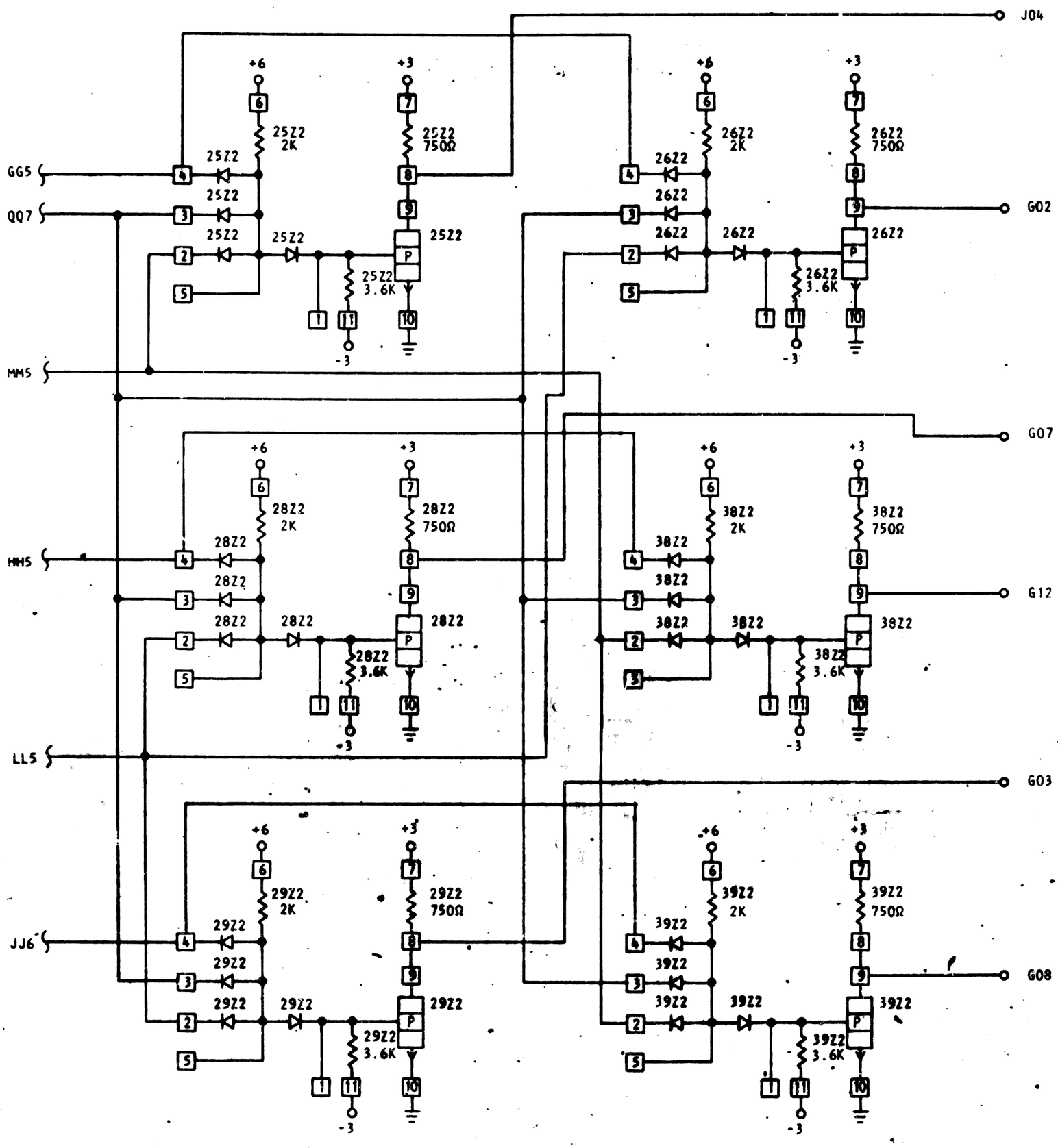

C

		DATE	CHANGE NO.	APPROVAL	DATE	CHANGE NO.	APPROVAL	DEVELOPMENT NO.	5806208
GATED BUFFER		3-24-65	1632030					SS586	
JH	1800								
JH	NONE								
CH								5806208	