FORM 2-7045-0 (12-62)

STANDARDS CODE	CIRCUIT AND PACKAGING STANDARD		SYM	DATE	CHANGE NO.	TECH APPRO	SYM	DATE	CHANGE NO.	TECH APPRO	DEVELOPMENT NO.	Q/M
2-7045				2-20-64	DEV.242A							
CARD CODE	APPROVAL	DATE		8-25-64	161309							
0514											5800514	

RESTRICTED

SHEET 3 OF 5

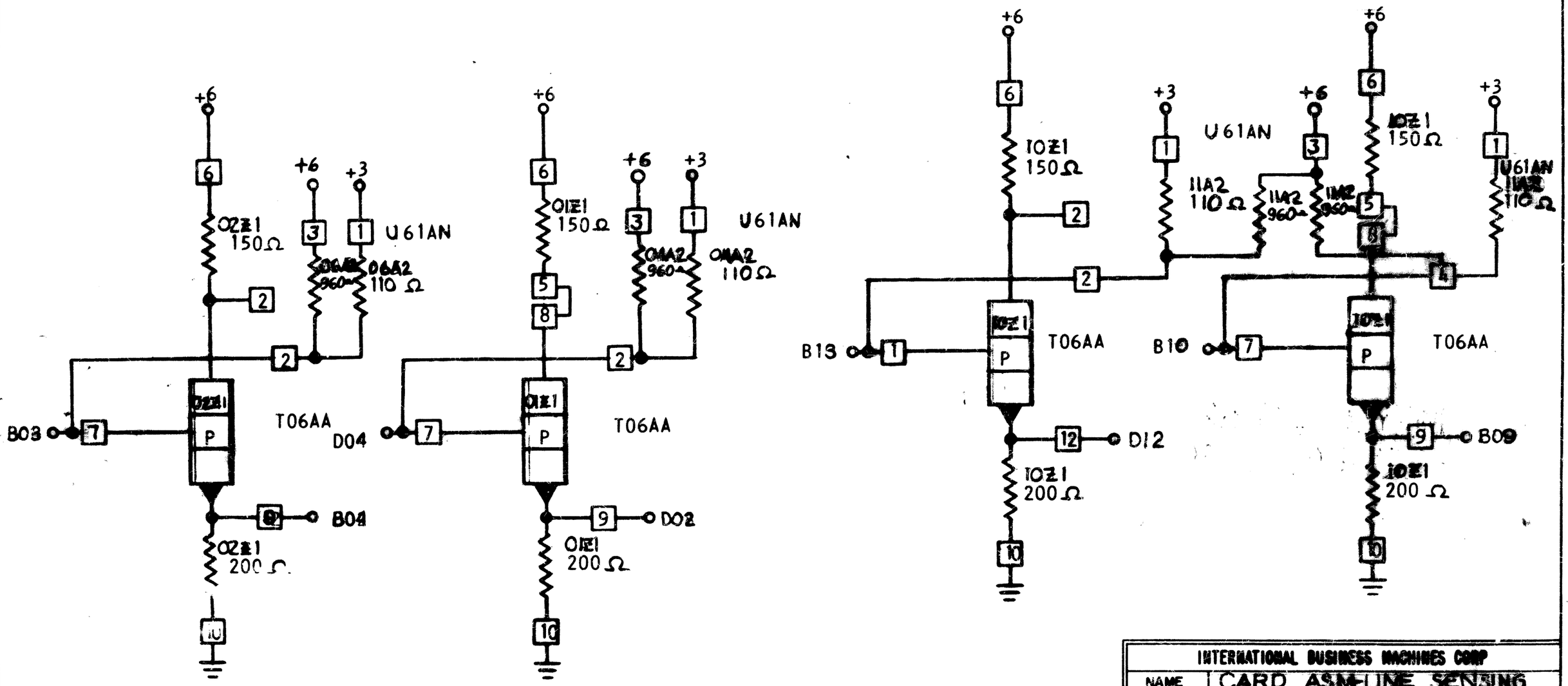

INTERNATIONAL BUSINESS MACHINES CORP					
NAME	CARD ASM-LINE SENSING AMPLIFIERS				
DESIGN	E.F.	3-22-64	TYPE	2060	
DETAIL	E.F.	3-22-64	SCALE	NONE	
CHECK	J.J.	3-25-64	DRAW	IDI	4-5-63
APPRO	WJR	4-17-63	CHECK	HCB	1-23-64

B 5800514