FORM 2-7045-0 (12-62)

STANDARDS CODE	CIRCUIT AND PACKAGING STANDARD		SYM	DATE	CHANGE NO.	TECH APPRO	SYM	DATE	CHANGE NO.	TECH APPRO	DEVELOPMENT NO.	Q/M
2-7045				11-6-63	DEV2142							
CARD CODE	APPROVAL	DATE		4-30-64	160205							
0527											5800527	

RESTRICTED

SHEET 3 OF 4

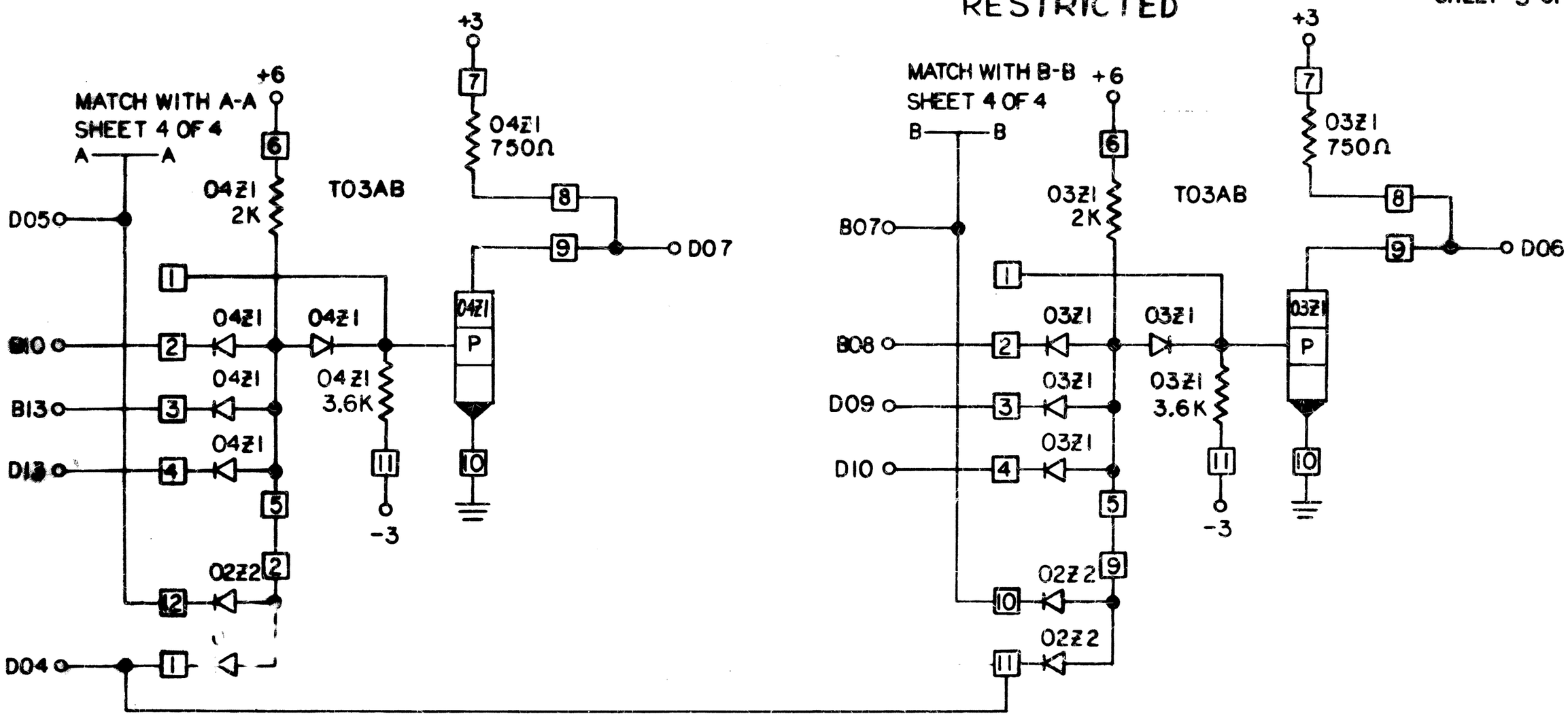

INTERNATIONAL BUSINESS MACHINES CORP					
NAME	CARD ASM-3(5W=AI) & 1(4W=AI) LOADED				
DESIGN	C&D	10-3-63	TYPE	2860	
DETAIL	C&D	10-4-63	SCALE	NONE	
CHECK	C&D	10-7-63	DRAW		
APPRO	WJR	11-6-63	CHECK	JEM	C22

B

5800527