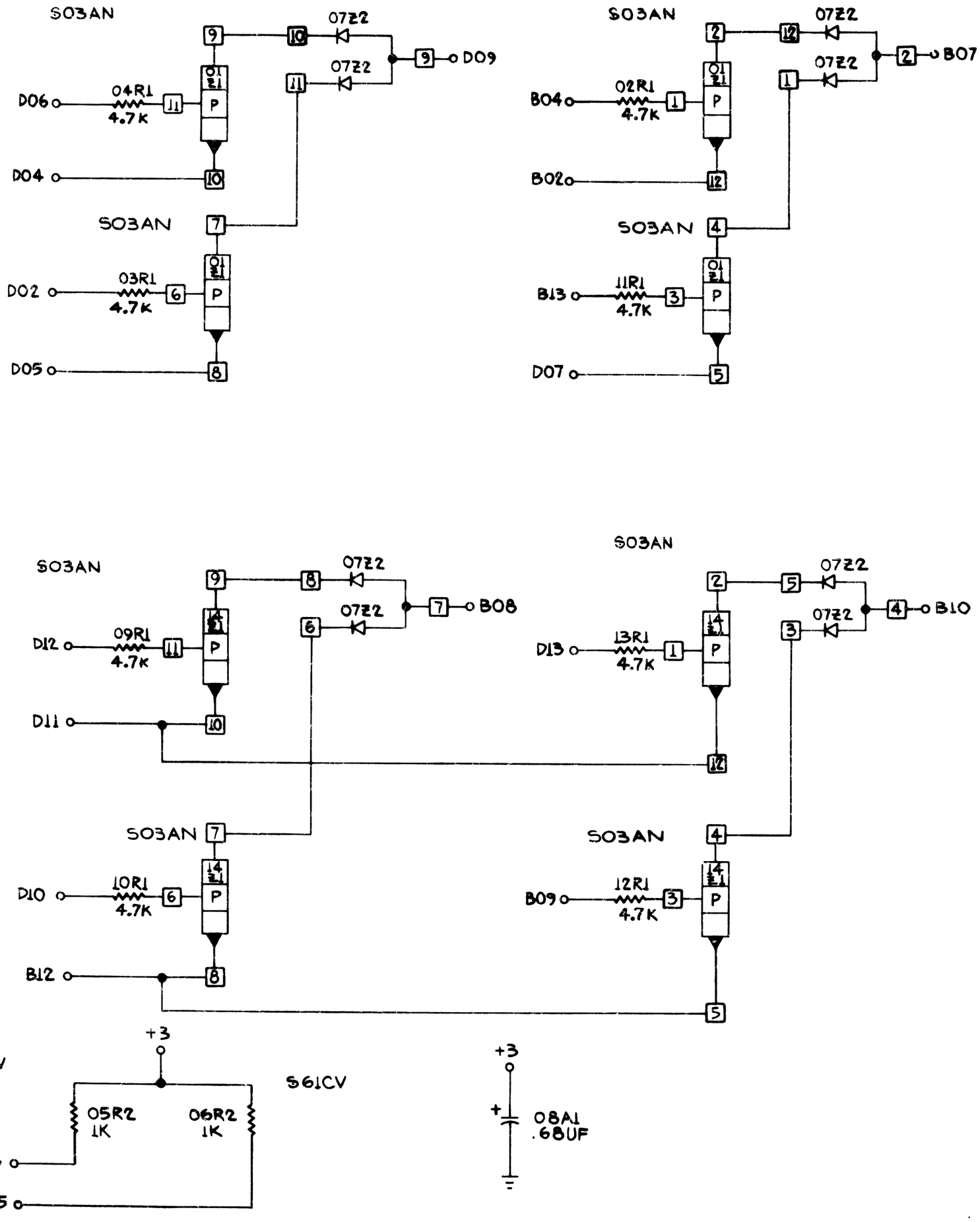

NOTES
XI ALL RESISTORS ARE 1/4W ±5%.

INTERNATIONAL BUSINESS MACHINES CORP.				DATE	CHANGE NO.	DATE	CHANGE NO.	NOTE	DEVELOPMENT NO.
NAME	CARD ASM- INDICATOR SWITCH			4-13-64	DEV2093			X PRINT TO ENG. SPEC. No. 895291	
DESIGN	AB	3-3-64	MODEL	1-13-68	DEV4201				
DETAIL	LOS	3-3-64	PKL. MTHD.	7-7-65	164270 A				5800707
CHECK	MJS	3-10-64	DRAW						
APPRD		3-23-64	CHECK						

5800707

G.B. CO., NO. 44-811