STANDARDS CODE

CARD CODE 5800721

RESTRICTED

SHEET 3 OF 3

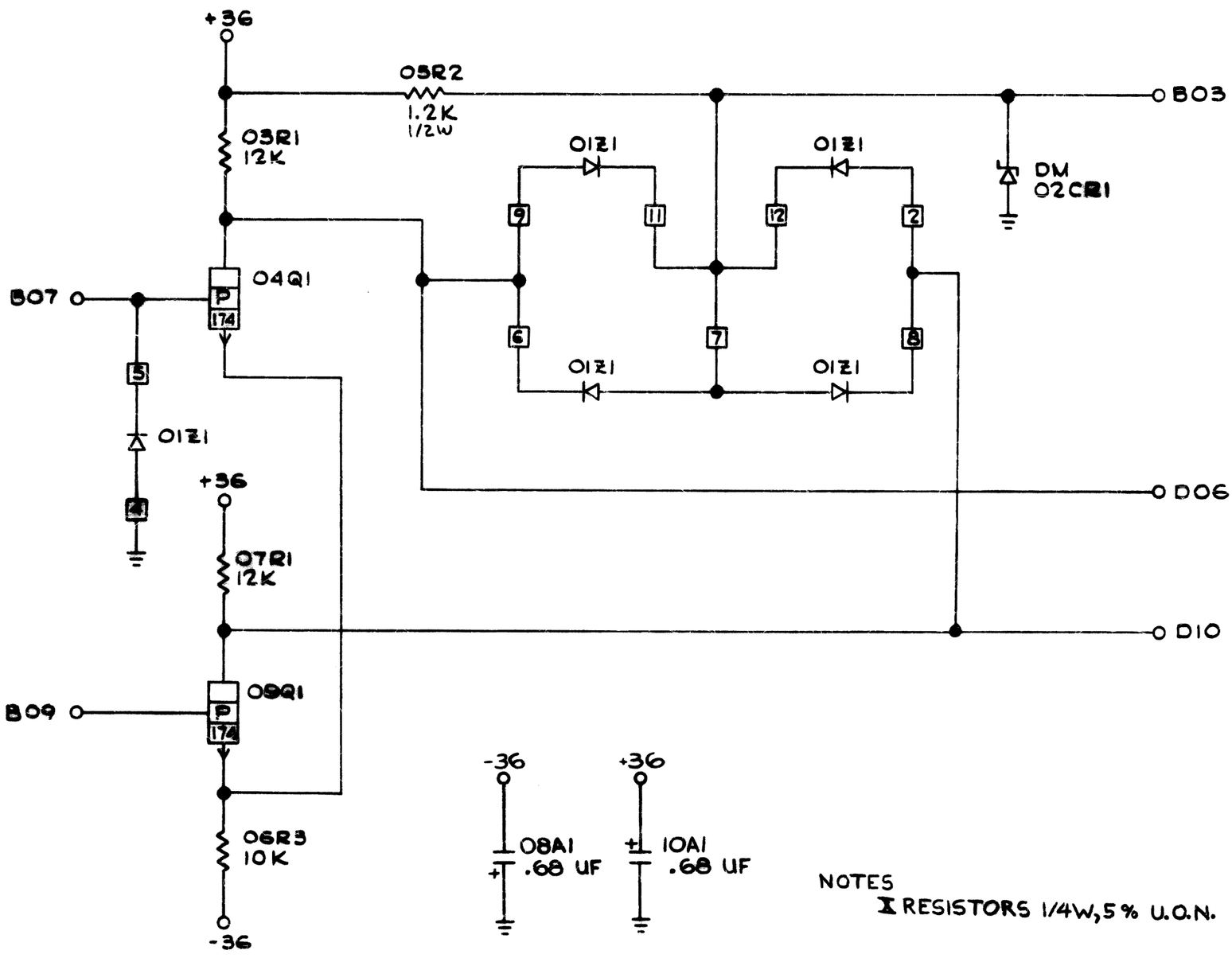

NOTES

1. RESISTORS 1/4W, 5% U.O.N.

CIRCUIT AND PACKAGING STANDARD	
APPROVAL	DATE

INTERNATIONAL BUSINESS MACHINES CORP.					DATE	CHANGE NO.	APPROVAL	DATE	CHANGE NO.	APPROVAL	DEVELOPMENT NO.	
NAME	TRANSLATE BLOCK				4-14-64	DEV2176					SS037	5800721
					8-28-64	161234						
DESIGN	FC	8-10-64	MODEL	2321								
DETAIL			SCALE	NONE								
CHECK			DRAWN									
APPRD			DATE									

C

C. S. CO., NO. 27047 42100

FORM 04-1001