STANDARDS CODE

5800744

CARD CODE 5800744

SHEET 3 OF 3

RESTRICTED

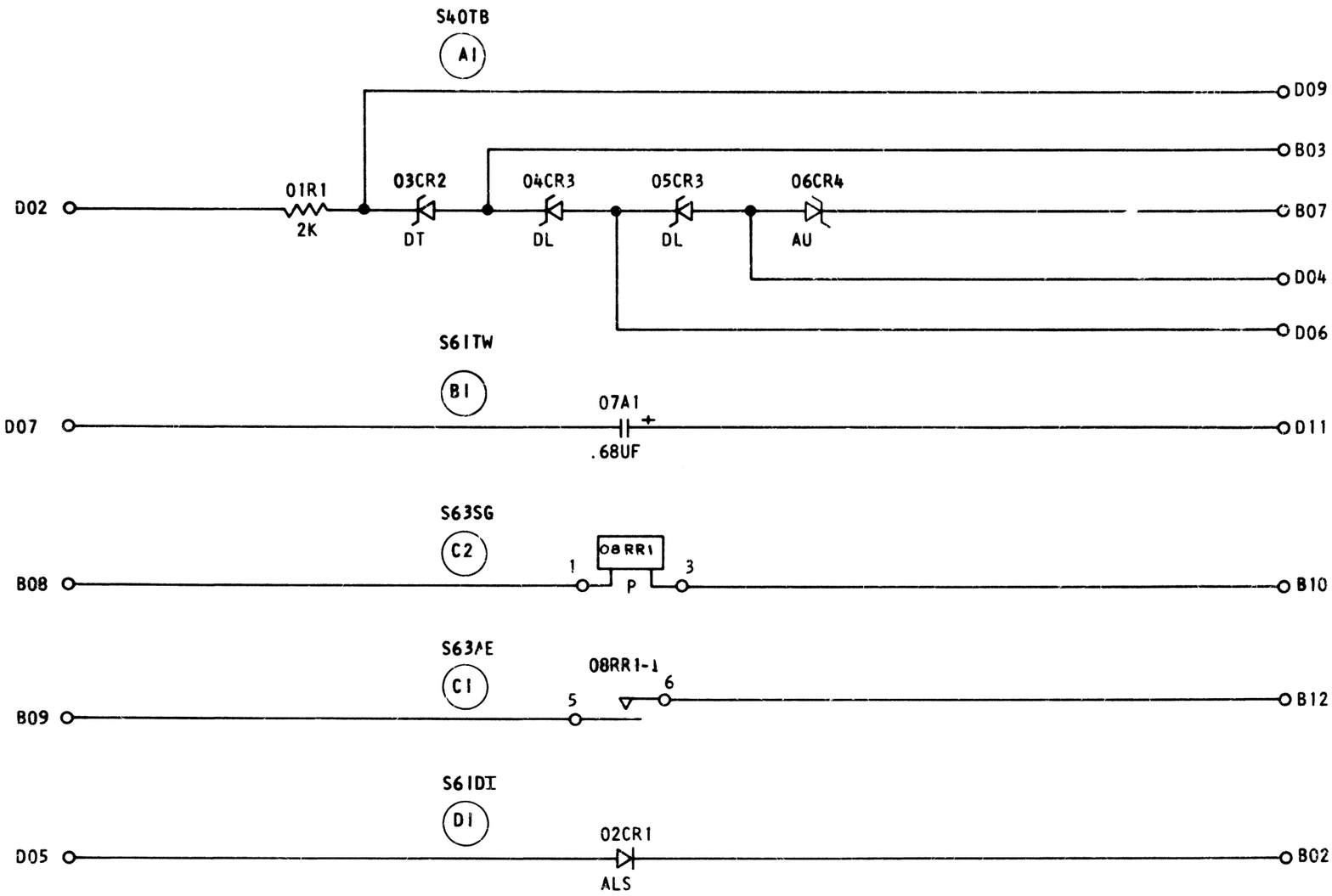

CIRCUIT AND PACKAGING STANDARD	
APPROVAL	DATE

INTERNATIONAL BUSINESS MACHINES CORP.						DATE	CHANGE NO.	APPROVAL	DATE	CHANGE NO.	APPROVAL	DEVELOPMENT NO.
NAME	TEST REF CARD					11-17-64	162089					SS540
						9JAN68	172658	B				5800744
DESIGN			MODEL									
DETAIL	CDE	11-13-64	SCALE	NONE								
CHECK	TH	11-13-64	DRAW	CDE	11-13-64							
APPRO			CHECK	TH	11-13-64							

5800744

C

C. P. CO. NO. 874W 66104