5800766

STANDARDS CODE

RESTRICTED

CARD CODE 5800766

SHEET 3 OF 3

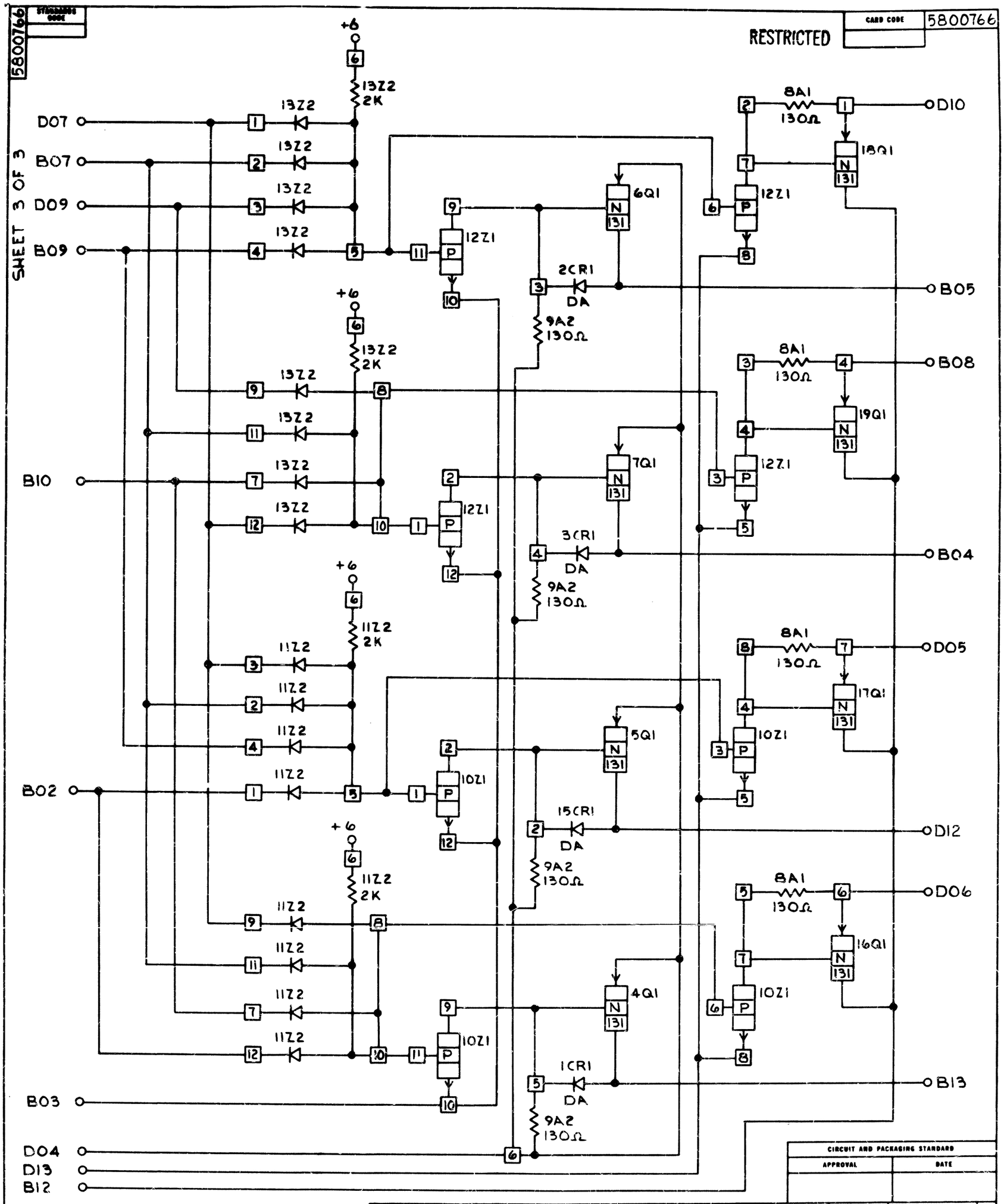

CIRCUIT AND PACKAGING STANDARD

APPROVAL	DATE

INTERNATIONAL BUSINESS MACHINES CORP.

NAME DRIVER GATE

DESIGN	RTT	6-18-5	MODEL	MOD 30	
DETAIL	CDE	6-18-5	SCALE	NONE	
CHECK	RTT	6-21-5	DRAW	KDE	6-17-5
APPRO		7-6-5	CHECK		

DATE	CHANGE NO.		APPROVAL	DATE	CHANGE NO.	APPROVAL	DEVELOPMENT NO.
6-29-6	164802	A					SS803
12 AUG65	165194	B					5800766

5800766

C