STANDARDS CODE 2-7045

5800786

F STRICTED

CARD CODE 5800786

SHEET 3 OF 3

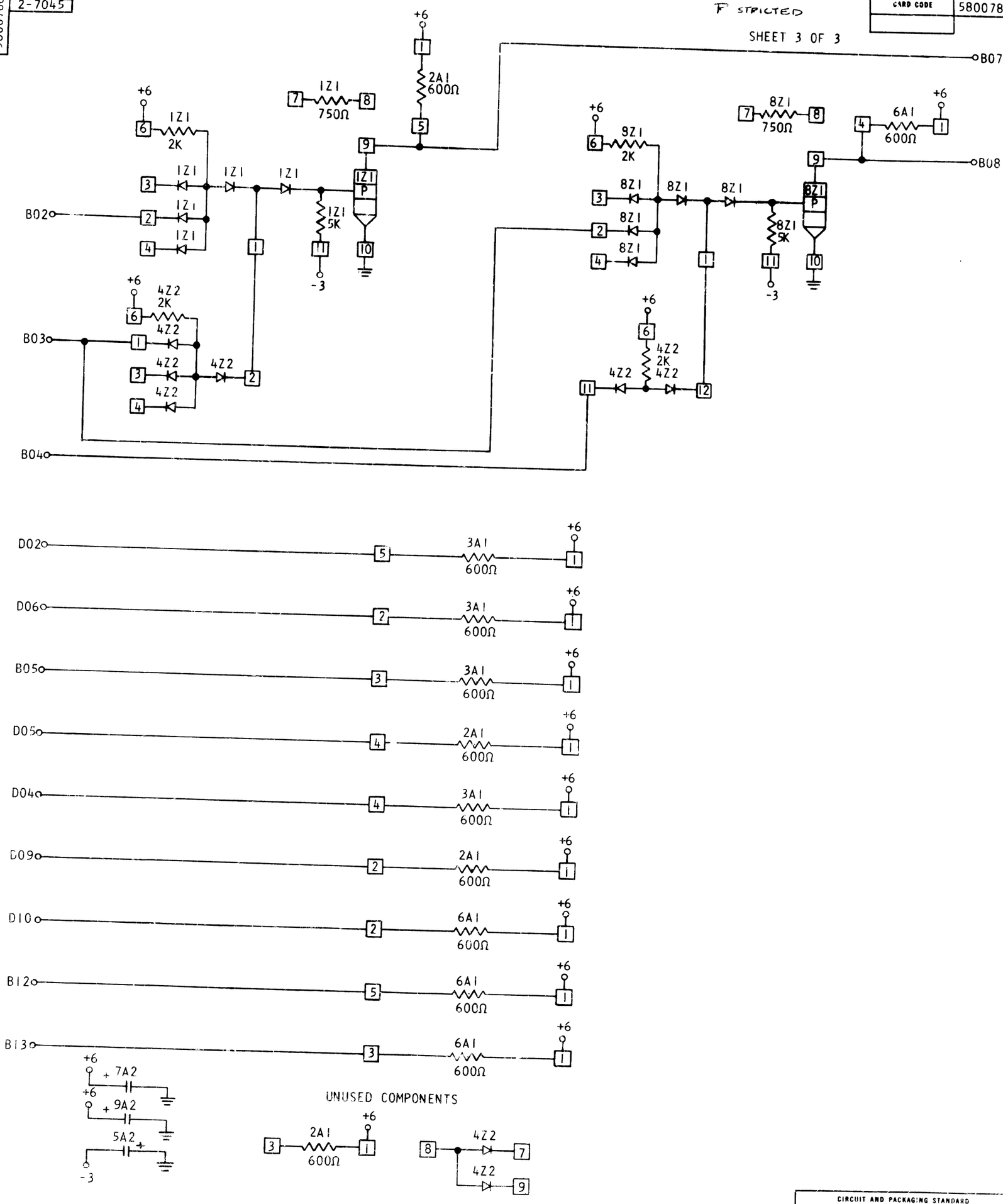

CIRCUIT AND PACKAGING STANDARD	
APPROVAL	DATE

INTERNATIONAL BUSINESS MACHINES CORP.					
NAME	M2 STORE DATA TERMINATORS				
DESIGN			MODEL		
DETAIL	RN	4-28-64	SCALE	NONE	
CHECK	CJB	4-29-64	DRAW	VMD	5-20-64
APPRO	[illegible]	5-8-64	CHECK		

DATE	CHANGE NO.	APPROVAL	DATE	CHANGE NO.	APPROVAL	DEVELOPMENT NO.
5-4-64	DEV 3153					
	DEV2827					
8-5-64	161019					

5800786

C