STANDARDS CODE 2-7045

58J0788

CARD CODE 5800788

RESTRICTED

SHEET 3 OF 3

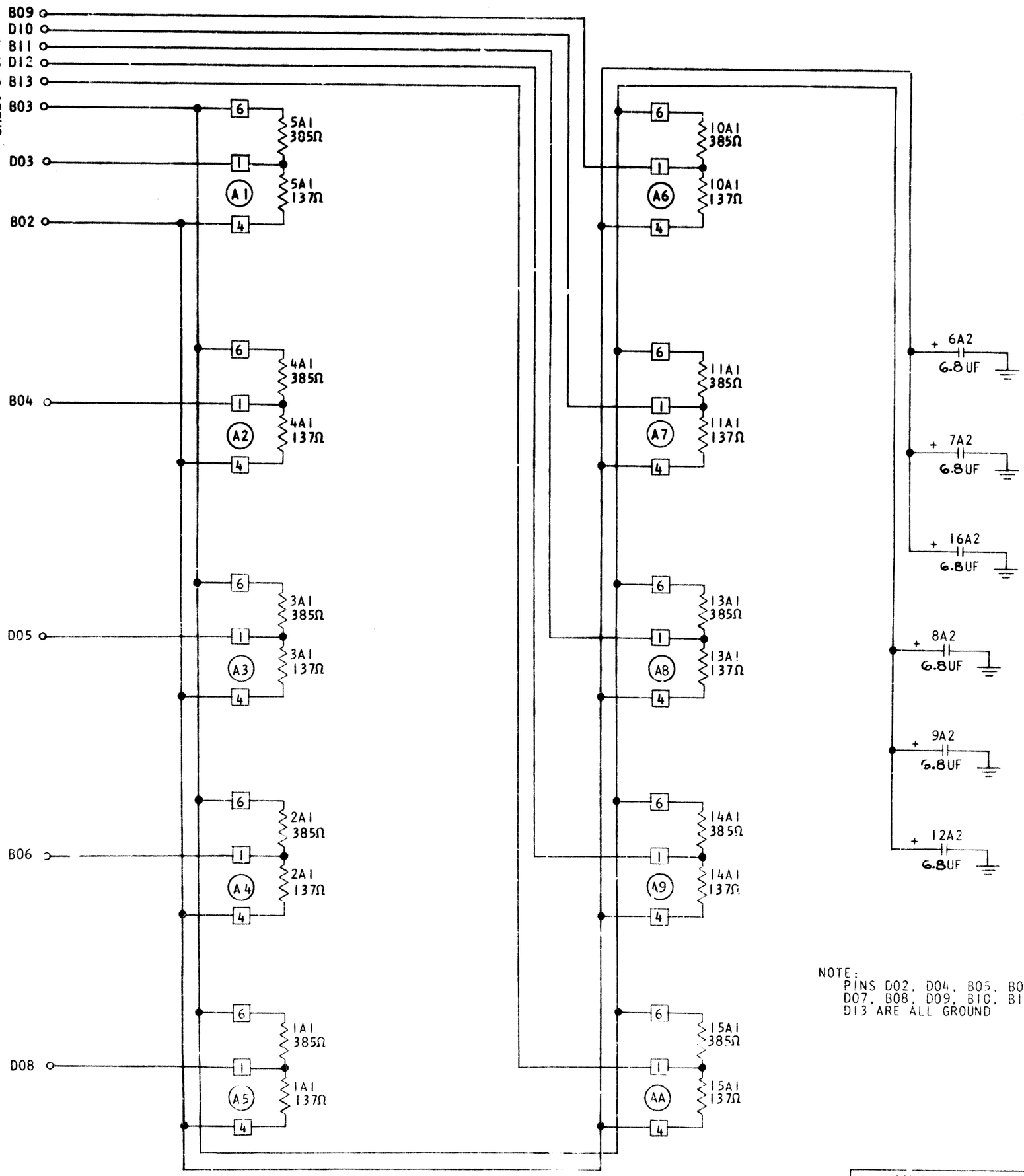

NOTE:
PINS D02, D04, B05, B07, D07, B08, D09, B10, B12, D13 ARE ALL GROUND

CIRCUIT AND PACKAGING STANDARD	
APPROVAL	DATE

INTERNATIONAL BUSINESS MACHINES CORP.												
NAME	NPL LINE TERMINATIONS			DATE	CHANGE NO	APPROVAL	DATE	CHANGE NO	APPROVAL	DEVELOPMENT NO		
DESIGN	KA	MODEL		4-21-64	DEV 3169		11-20-64	162317				
DETAIL	RN 2-24-64	SCALE	NONE	5-22-64	DEV 3272		18OCT65	165752	D			
CHECK	JMB 2-26-64	DRAW	VMD 4-13-64	7-1-64	DEV 4027							
APPROV		CHECK	ESL 9-15-64	7-30-64	160991							
				10-22-64	162139							

C

5800788