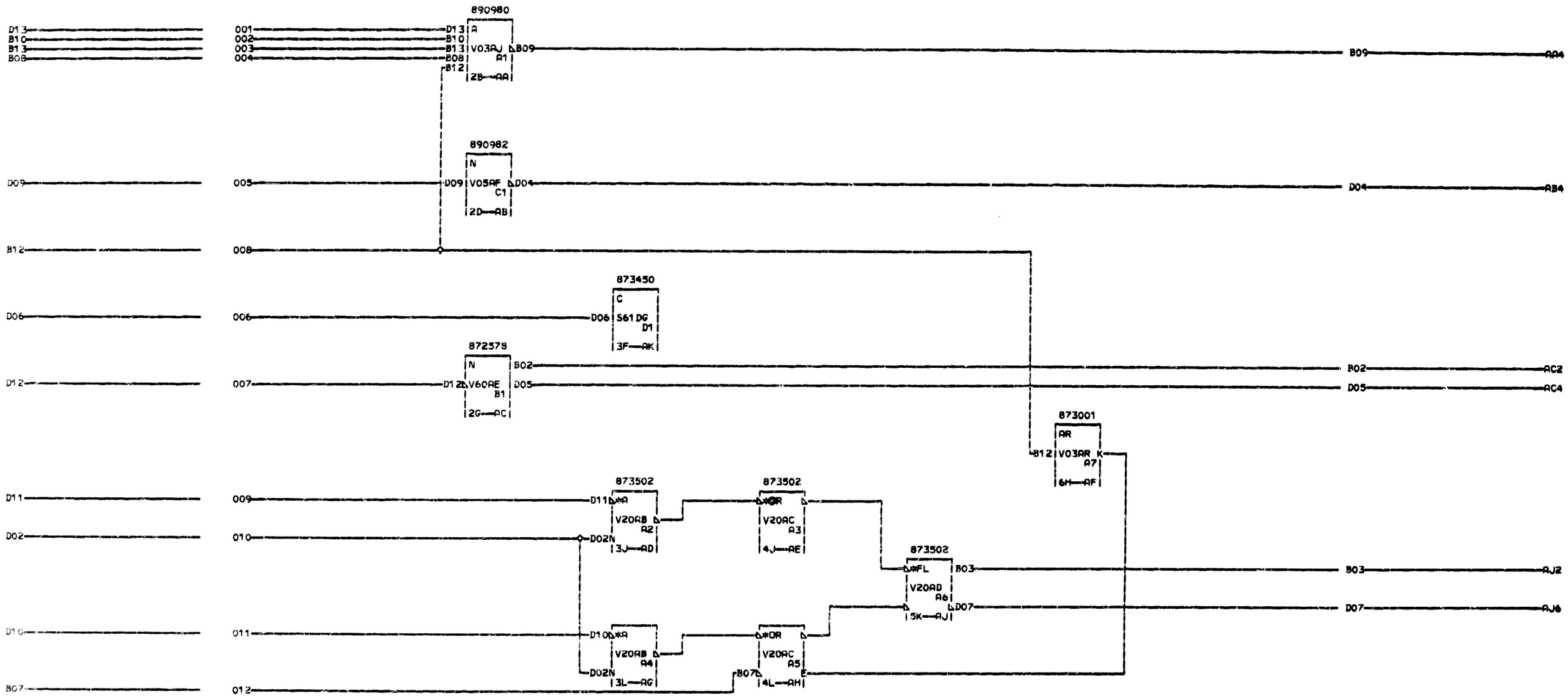

CARD SIZED 1-6 PAC V65
VOLTAGE PINS
0 +120D03 GNDDD08
7
9 STANDARD RESTRICTED
5 #220
1

000

03-17-65 160956 A

RESTRICTED

PA + CK + APLX-1	
DATE 03-18-65 ARCH. ASSEMBLY	0
LOG 664 FRAME	7
C N SPROTT P.N. 5800795	9
IBM CORP. LX BLK. AL	5 1 000