STANDARDS CODE
2 7045

5800813

CARD CODE	5800813

SHEET 3 OF 3

~~RESTRICTED~~

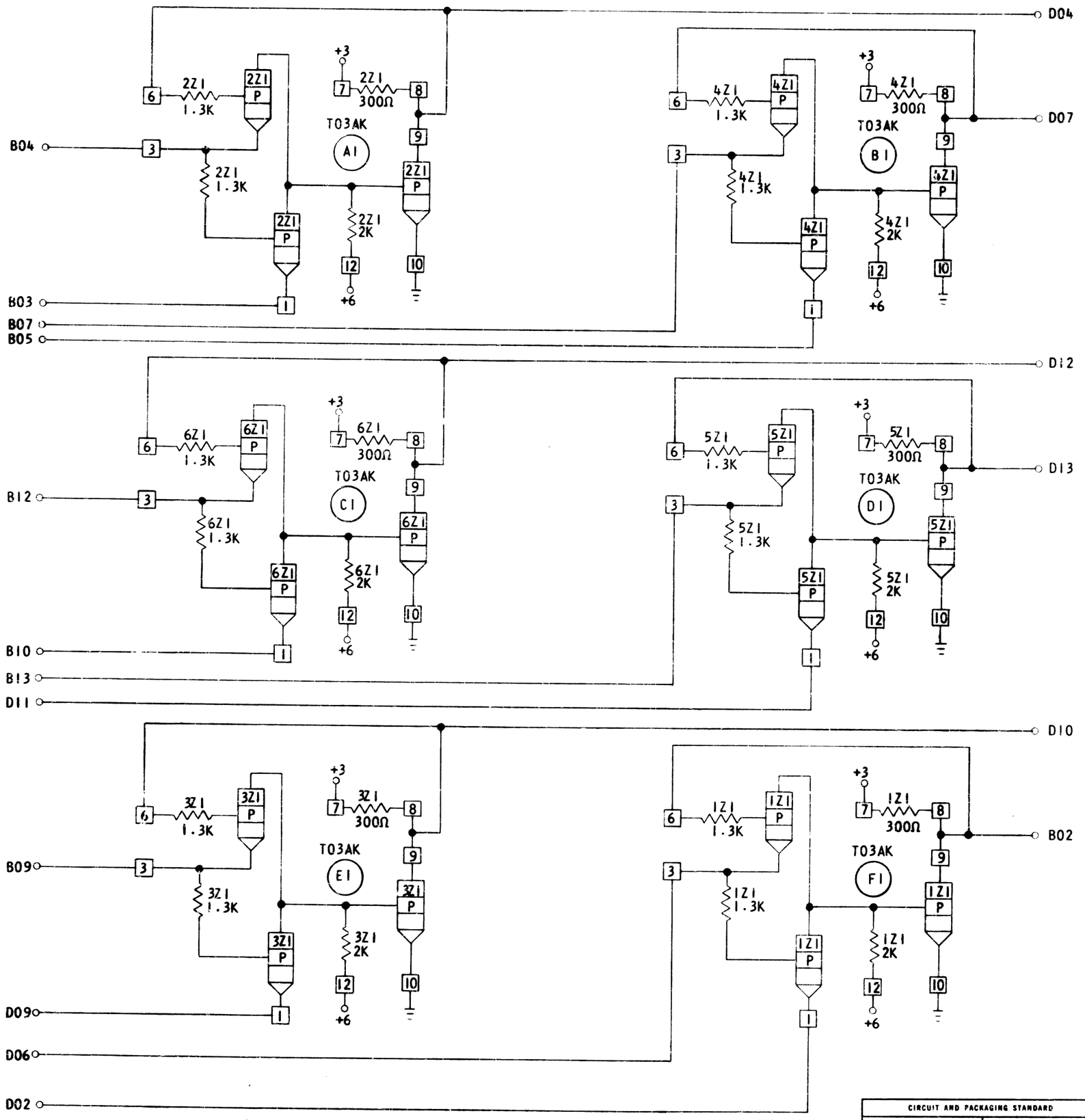

CIRCUIT AND PACKAGING STANDARD	
APPROVAL	DATE

INTERNATIONAL BUSINESS MACHINES CORP.				
NAME	6 EXCLUSIVE OR LATCHES			
DESIGN	CB	4-17-63	MODEL	
DETAIL	CB	4-17-63	SCALE	NONE
CHECK	HAN	4-18-63	DRAW	MOE 1-10-64
APPRO			CHECK	TH 1-15-64

DATE	CHANGE NO.		APPROVAL	DATE	CHANGE NO.		APPROVAL	DEVELOPMENT NO.
7-12-64	DEV 3335							SE 0151
7-16-64	161115	A						
17OCT67	172564	B						

5800813

C

C. B. CO., NJ. 07407 42100

FORM 22 1001