STANDARDS CODE E-7045

5800816

CARD CODE 0816 5800816

SHEET 3 OF 3

SHEET 3 OF 3

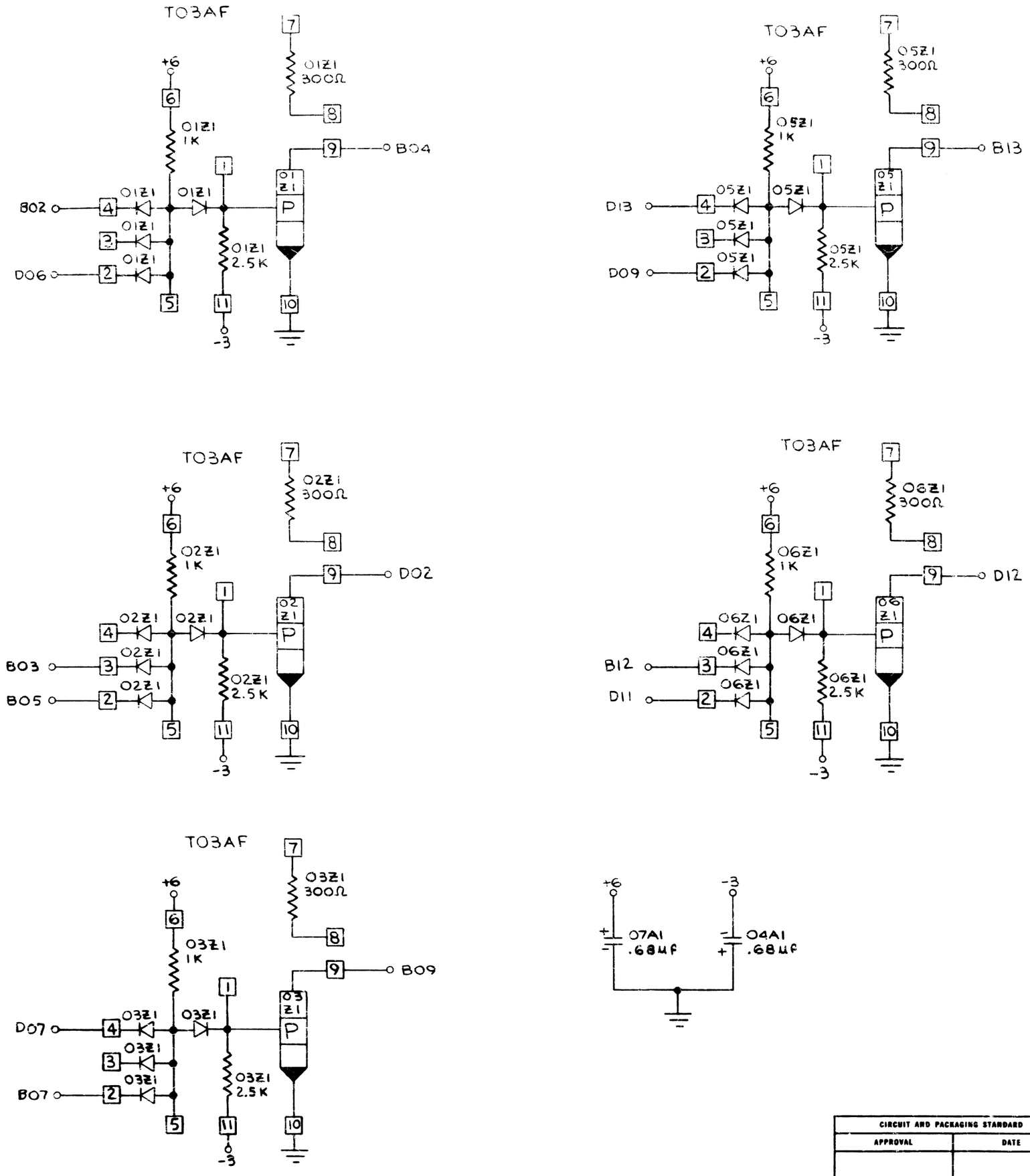

CIRCUIT AND PACKAGING STANDARD	
APPROVAL	DATE

INTERNATIONAL BUSINESS MACHINES CORP.				DATE	CHANGE NO.	APPROVAL	DATE	CHANGE NO.	APPROVAL	DEVELOPMENT NO.
NAME	CARD ASM- 5 2W API			9-1-64	DEV3393					
				9-11-66	765638-A					5800816
DESIGN	NIS 8-6-64	MODEL	TDPS							
DETAIL	NIS 8-6-64	SCALE	NONE							
CHECK	RJS 9-1-64	DRAWN	NIS 8-6-64							
APPRO	9-2-64	CHECK	RJS 9-1-64							

C