5800829

STANDARD 2-7045

SHEET 3 OF 3

ARC SLE 0829

5800829

RESTRICTED

SHEET 3 OF 3

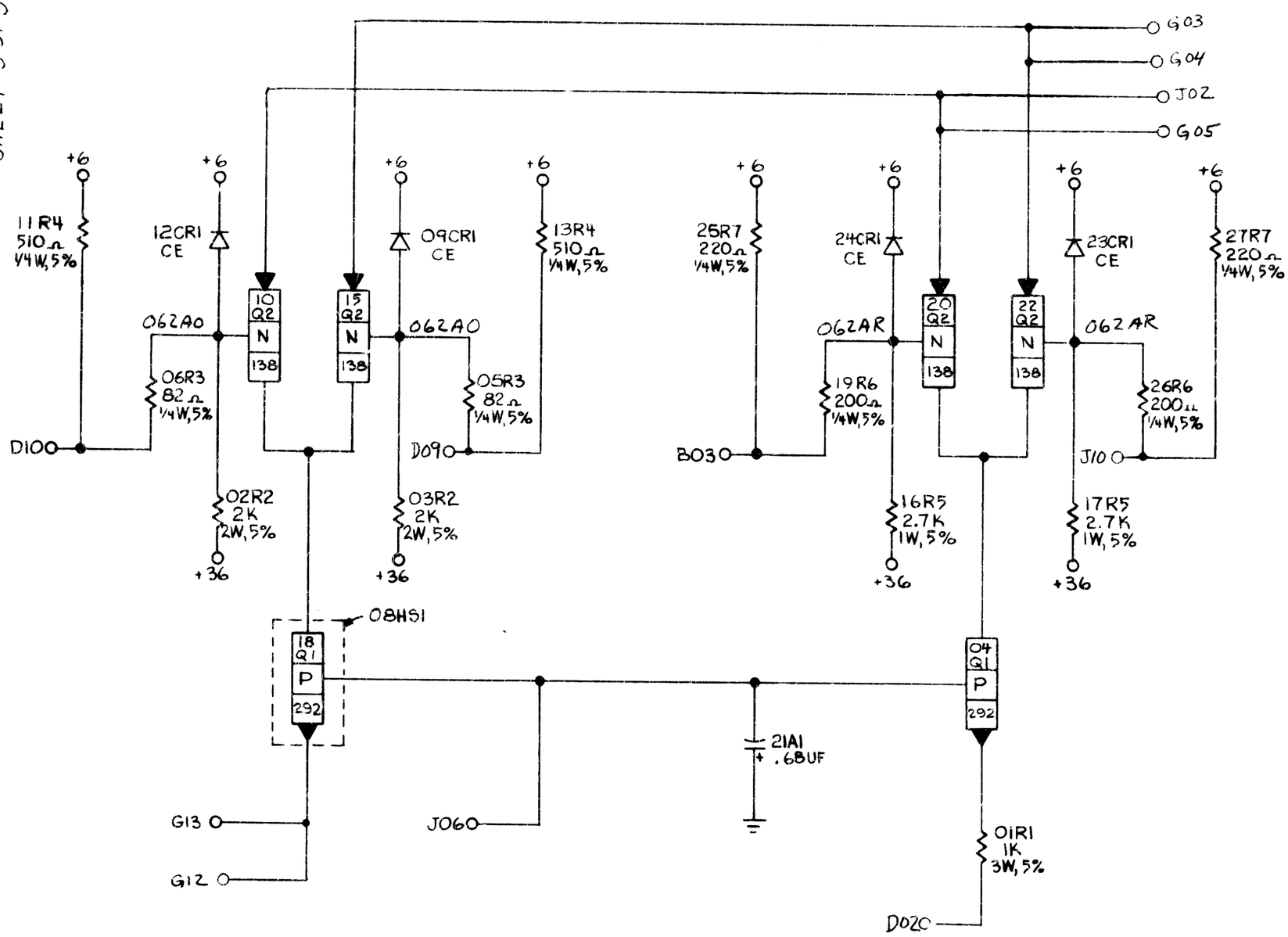

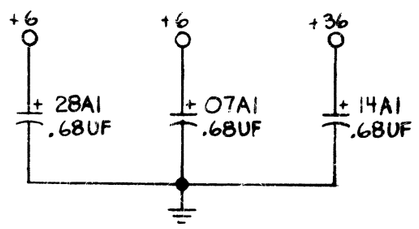

NOTE: D11 AND D12 ARE ONLY VOLTAGE PINS BUSSED

CIRCUIT AND PACKAGING STANDARD	
APPROVAL	DATE
J.Z. Overbeck	3-10-65

INTERNATIONAL BUSINESS MACHINES CORP.											
NAME	CARD ASM- HIGH										
LEVEL	V-A R1T5 1 AND 4										
DESIGN	NIS	11-29-64	MODEL	2250							
DETAIL	NIS	11-29-64									
CHECK	MPR	12-11-65	DRAW	NIS	12-7-64						
APPRO	JZS	3-10-65	CHECK								

DATE	CHANGE NO.		DATE	CHANGE NO.
03-25-65	163124	A		
08-09-65	165337	B		
5 OCT 65	165674	C		

NOTE
X PRINT TO ENG. SPEC. NO.

DEVELOPMENT NO.
680-673

5800829

5800829

C. R. CO., NC. 44-811A 42478

FORM 90-6570-1