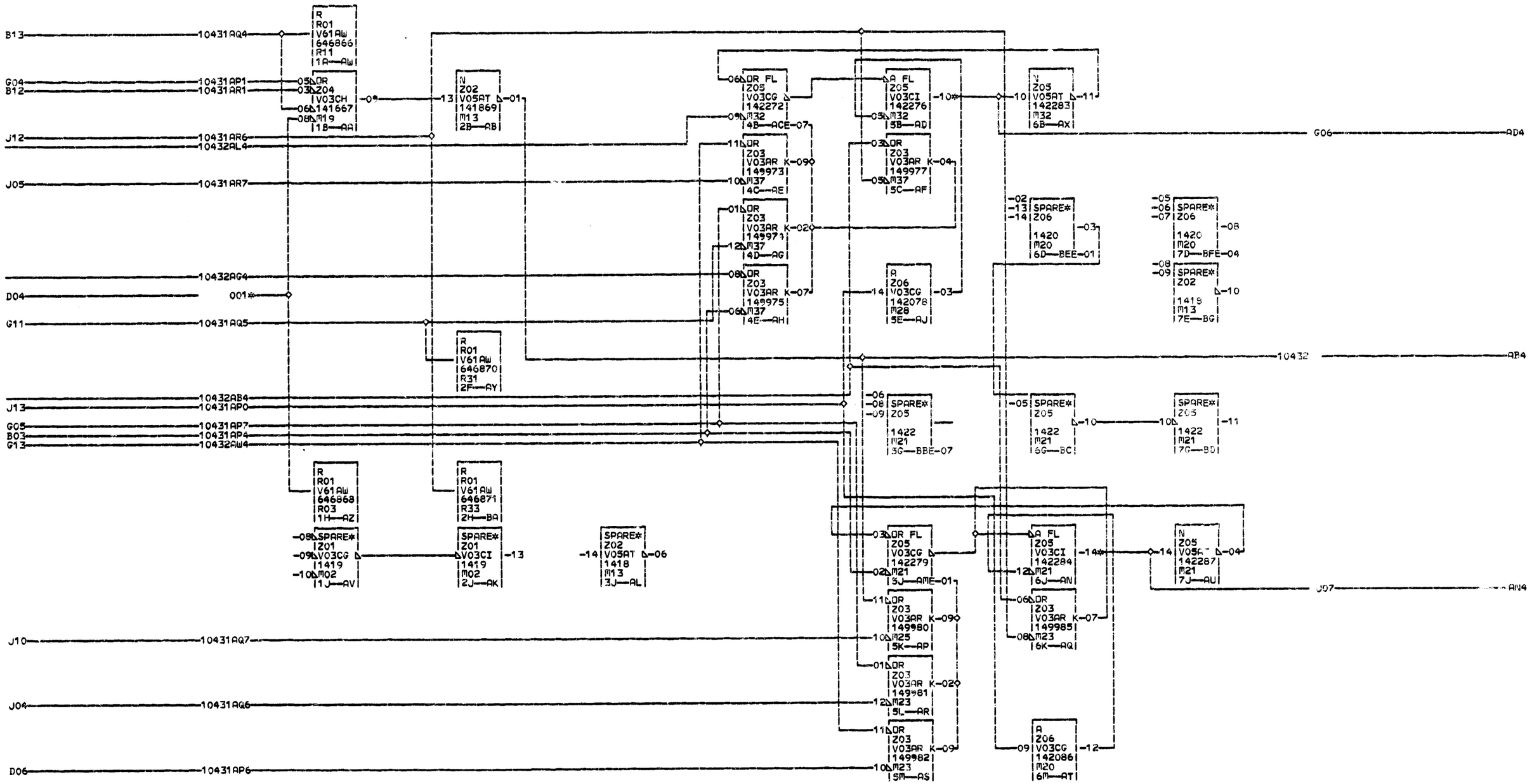

05-08-68 174328 A

001	
	D04
AD4	
	G06
AN4	
	J07

1043
000

KYBD ENCODER NUMERIC WT
GERMANY-DENMARK
DATE 05-08-68 MACH. ASSEMBLY
LOG 130 FRAME
CD PG 3 OF 3 P.N. 5801043
IBM CORP. PD BLK. BH

1043
000