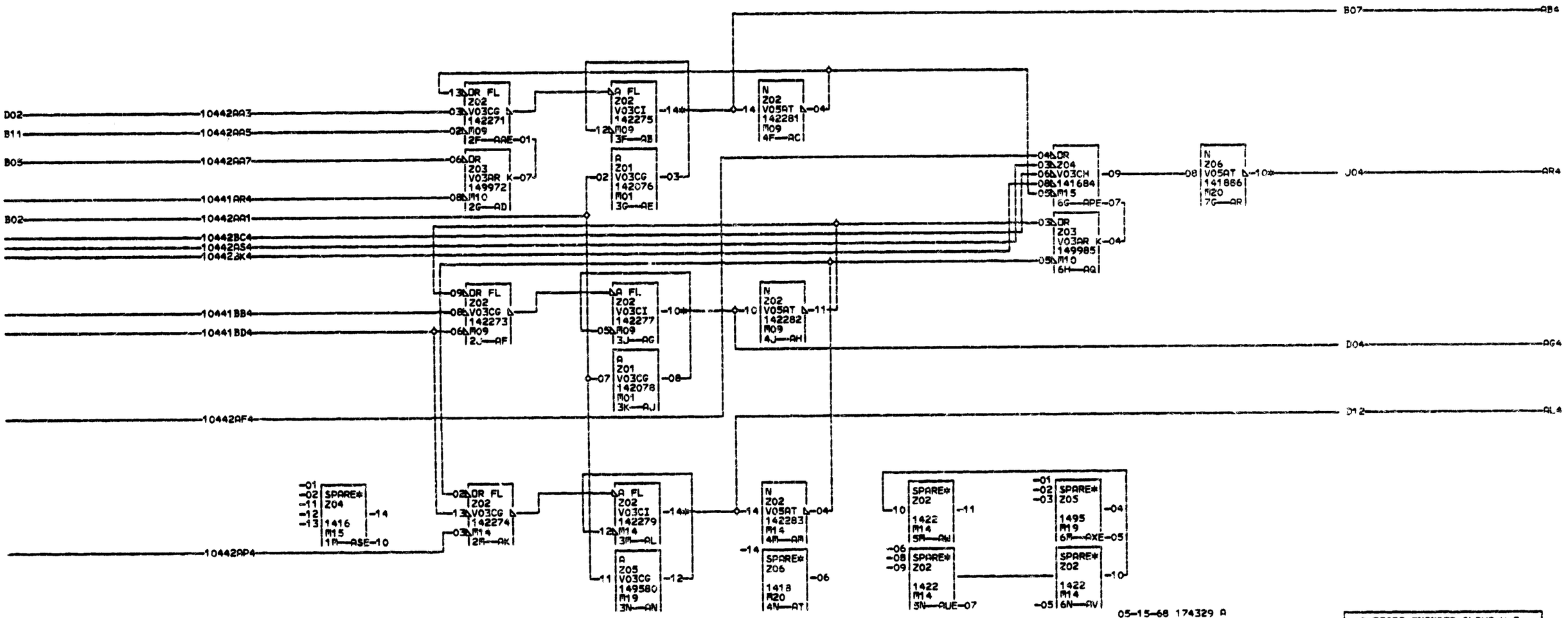

05-15-68 174329 A

AB4	B07
AG4	D04
AL4	D12
AR4	J04

1 0 4 4 3 000

KEYBOARD ENCODER ALPHA W.T. GERMANY
DATE 05-20-68 MACH. ASSEMBLY
LOG 134 FRAME
CD PG 3 OF 3 P.N. 5801044
IBM CORP. PD BLK. AV

1 0 4 4 3 000