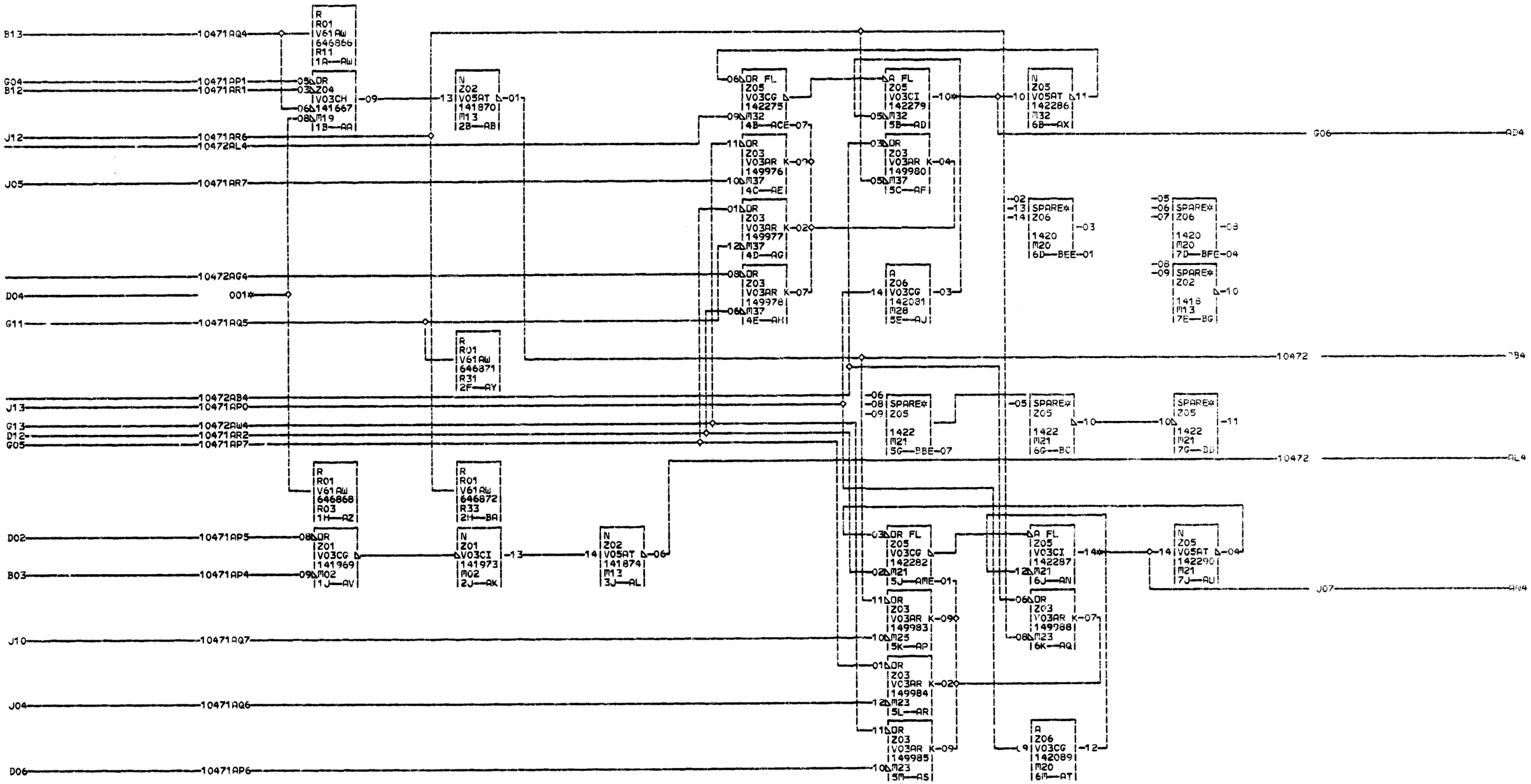

1
0
4
7
3
000

001
D04
AD4
G06
AN4
J07

05-14-68 174333 A

KYBD ENCODER NUMERIC
W.T.PORTGUAL
DATE 05-08-68 MACH. ASSEMBLY
LOG 130 FRAME
CD PG 3 OF 3 P.N. 5801047
IBM CORP. PD BLK. BH

1
0
4
7
3
000