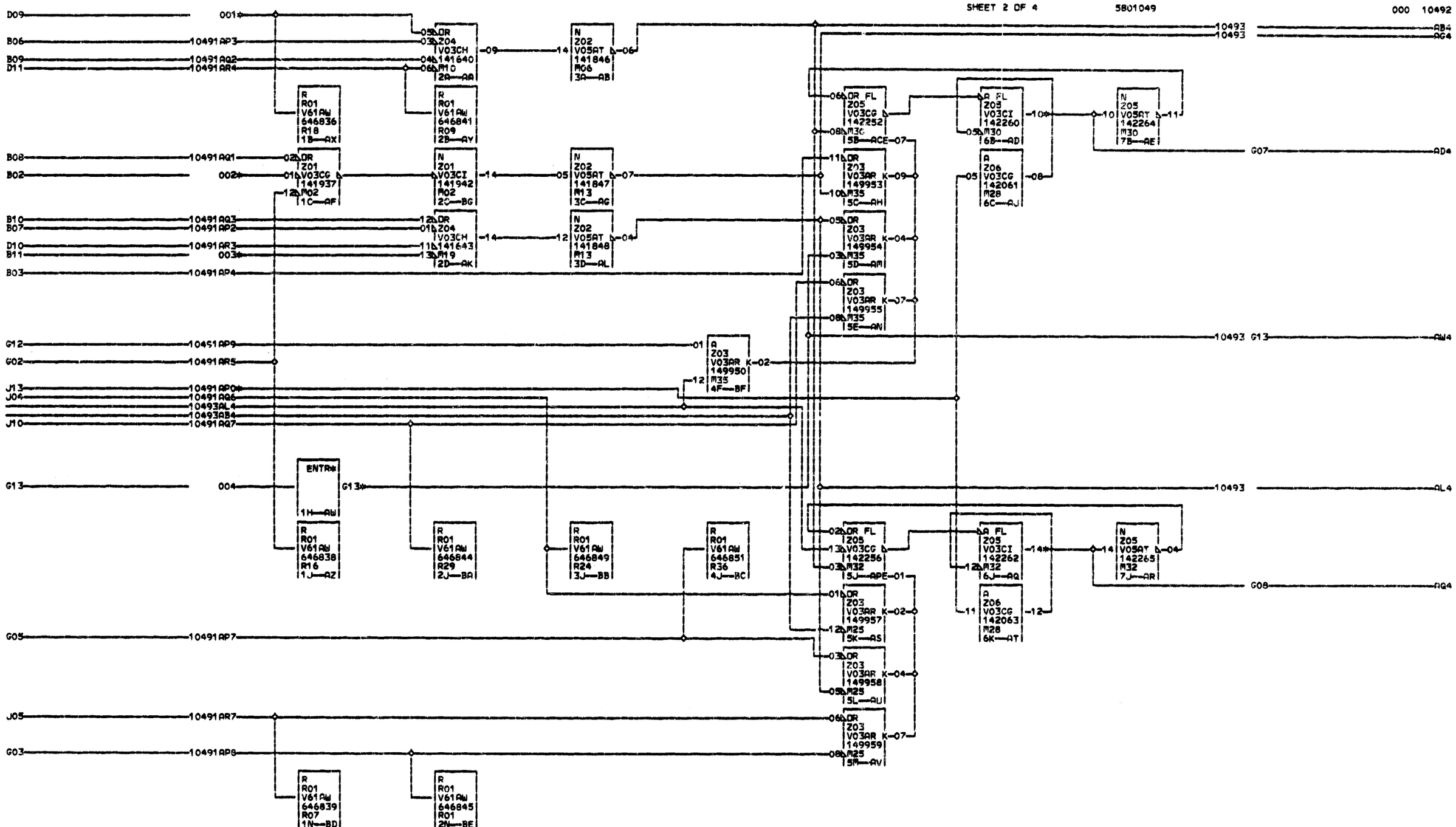

05-10-68 174335 A

* CONTINUED FROM PG 1
* Z05 +12 15000 16
1 * Z06 +12 15000 16
0 * R01 +12 02
4 * M06Z02 +12 05
9 * M13Z02 +12 08
2
000

001
D09
002
B02
003
B11
10491AP0
J13
AD4
G07
AG4
G08
AW4
G13

KYBD ENCODER NUMERIC W.T. BRAZIL	
DATE 05-20-68 MACH. ASSEMBLY	1
LOG 134 FRAME	0
CD PG 2 OF 3 P.N. 5801049	4
IBM CORP. PD BLK. BH	9
	2
	000