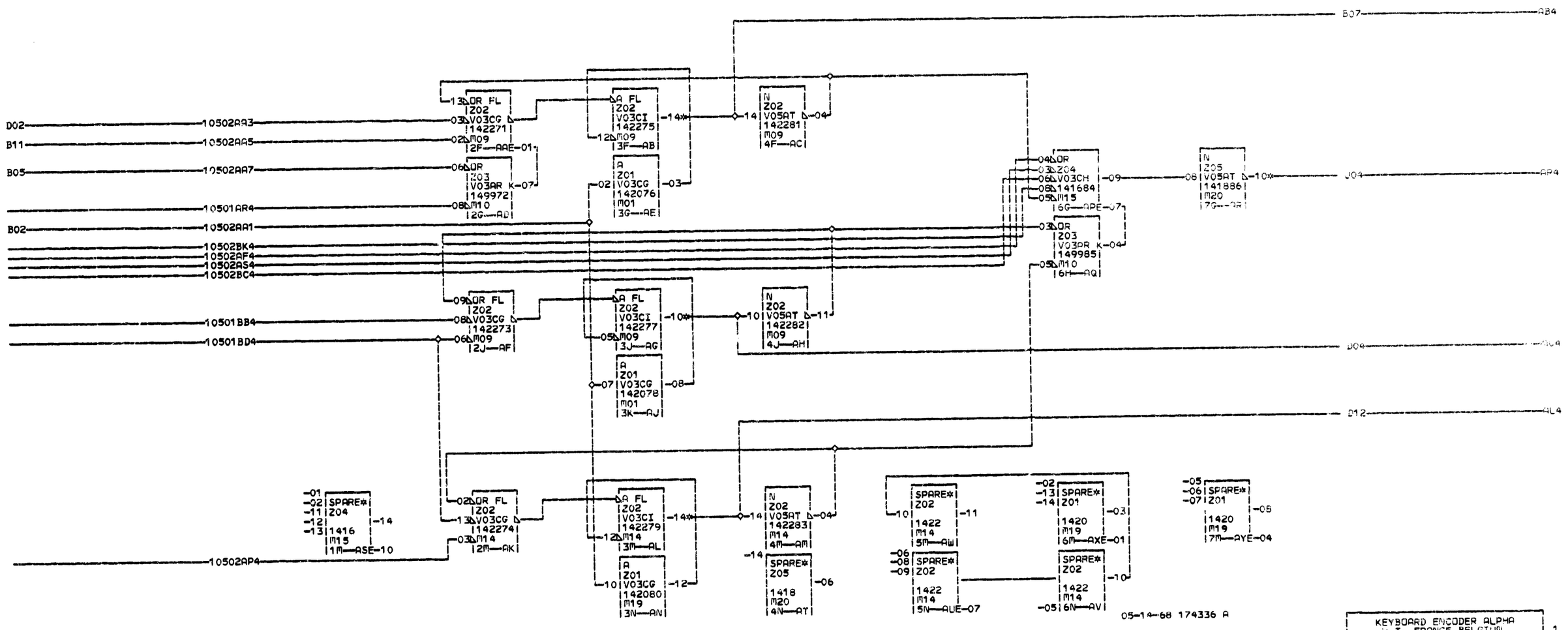

05-14-68 174336 A

1
0
5
0
3
000

AB4
B07
AG4
D04
AL4
D12
AR4
J04

KEYBOARD ENCODER ALPHA
W.T. FRANCE BELGIUM
DATE 05-08-68 MACH. ASSEMBLY
LOG 130 FRAME
CD PG 3 OF 3 P.N. 5801050
IBM CORP. PD BLK. AZ

1 0 5 0 3 000