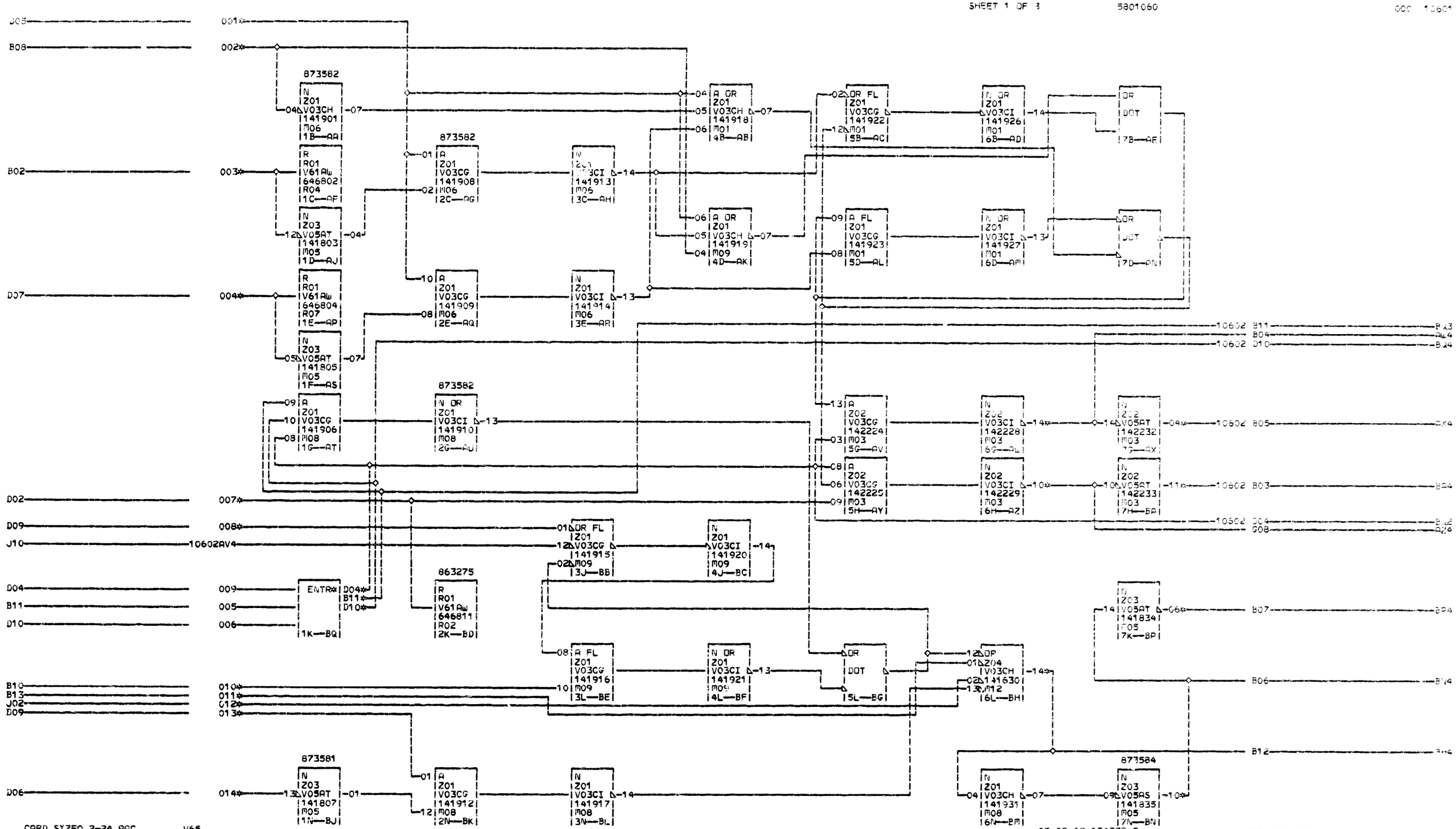
873582
863275
873581
873584
ENTR
CARD SIZE: 2-24 PAC
VOLTAGE PINS
1 +12V:D03:J03
0 GND:D08:J08
6 STANDARD RESTRICTED
0 *ALL VOLTAGES BUSSED
1 *Z01 +12 15000 16
*Z02 +12 15000 16
000*Z03 +12 15000 16
*Z04 +12 5000 16
V65
001 D05
002 B08
003 B02
004 D07
005 B11
006 D10
007 D02
008 D09
009 D04
010 B10
011 B13
012 J02
013 D06
014
B02 B03 B04 B05 B06 B07 B11 B12 B13 B10 D02 D04 D06 D09 D10 G08 J02
05-03-68 174338 A
KEYBD INTERFACE WT
UNITED KINGDOM
DATE 05-06-68 MACH. ASSEMBLY
LOG 124 FRAME
CD PG 1 OF 2 P.N. 5801060
IBM CORP. PD BLK. BR
1 0 6 0 1 000