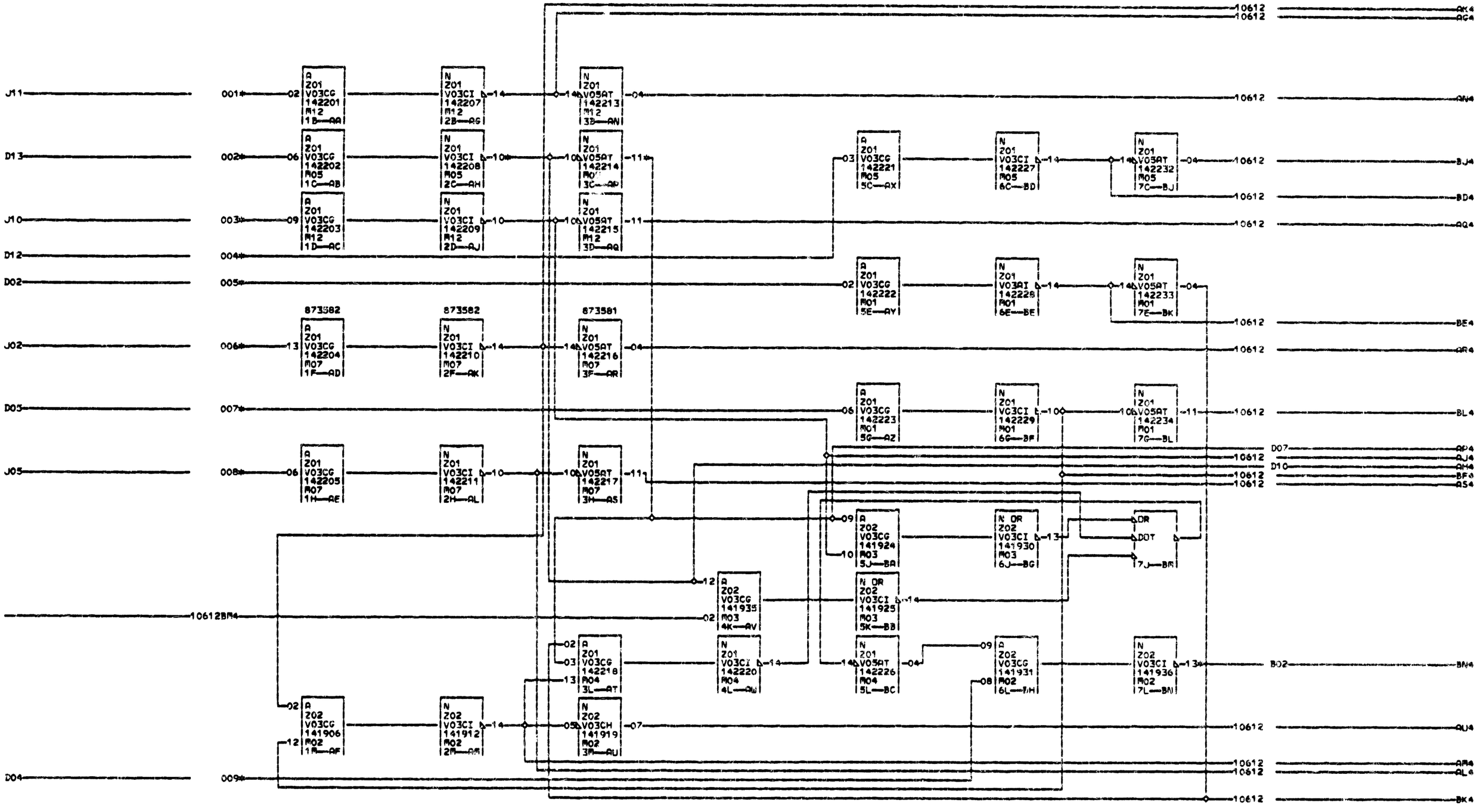

CARD SIZE0 2-24 PAC V03
VOLTAGE PINS
1 +120D03◇J03
0 GND◇D08◇J08
6 STANDARD RESTRICTED
1 *ALL VOLTAGES ARE BUSSED
1 *Z01 +12 15◇00 16
*Z02 +12 15◇00 16
000*Z03 +12 15◇00 16

001	D02	AH4
J11	006	D10
002	J02	AP4
D13	007	D07
003	D05	BN4
J10	008	BO2
004	J05	
D12	009	
005	D04	

05-20-68 174512 A

SPECIAL CODE INTERLOCK	
DATE 05-20-68 MACH. ASSEMBLY	1
LOG 138 FRAME	0
CD PG 1 OF 2 P.N. 5601061	6
	1
IBM CORP. PD BLK. BP	1
	000