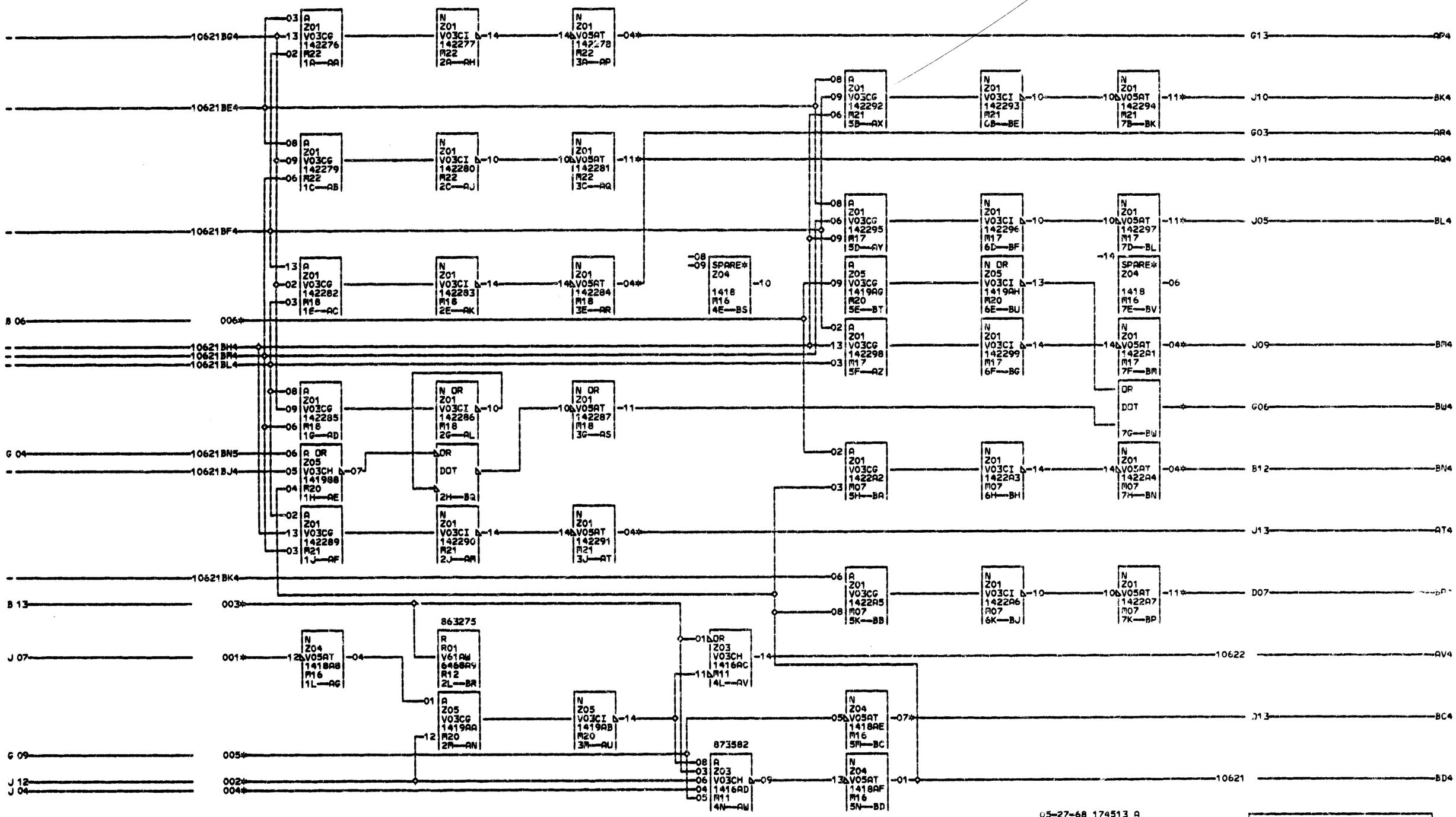
10621BG4
10621BE4
10621BF4
B 06
006*
10621BH4
10621BM4
10621BL4
G 04
10621BN5
10621BJ4
10621BK4
B 13
003*
J 07
001*
G 09
005*
J 12
002*
J 04
004*
863275
873582
G13
AP4
J10
BK4
G03
AR4
J11
AQ4
J05
BL4
J09
BM4
G06
BW4
B12
BN4
J13
AT4
D07
10622
AV4
D13
BC4
10621
BD4
SPARE*
Z04
1418
M16
4E—BS
SPARE*
Z04
1418
M16
7E—BV
OR
DOT
7G—BW
2H—BQ
1G—AD
2G—AL
3G—AS
1A—AA
2A—AH
3A—AP
1C—AB
2C—AJ
3C—AQ
1E—AC
2E—AK
3E—AR
1L—AG
2L—BR
2M—AN
3M—AU
4L—AV
4N—AW
5B—AX
6B—BE
7B—BK
5D—AY
6D—BF
7D—BL
5E—BT
6E—BU
7E—BV
5F—AZ
6F—BG
7F—BM
5H—BA
6H—BH
7H—BN
5K—BB
6K—BJ
7K—BP
5M—BC
5N—BD
1419AG
1419AH
1419AA
1419AB
1422A1
1422A2
1422A3
1422A4
1422A5
1422A6
1422A7
1418AE
1418AF
1416AC
1416AD
05-27-68 174513 A
HORIZONTAL AND VERTICAL
LAMP DECODING
DATE 06-28-68 MACH. ASSEMBLY
LOG 164 FRAME
CD PG 3 OF 3 P.N. 5801062
IBM CORP. PD BLK. BX
10623
000