FORM 2-7045-6 (6-63)

STANDARDS CODE	CIRCUIT AND PACKAGING STANDARD		SYM	DATE	CHANGE NO.	TECH APPRO	SYM	DATE	CHANGE NO.	TECH APPRO	DEVELOPMENT NO	Q/M
2-7045					175351 A							
CARD CODE	APPROVAL	DATE										
1066	PHS										5801066	

SHEET 9 OF 11

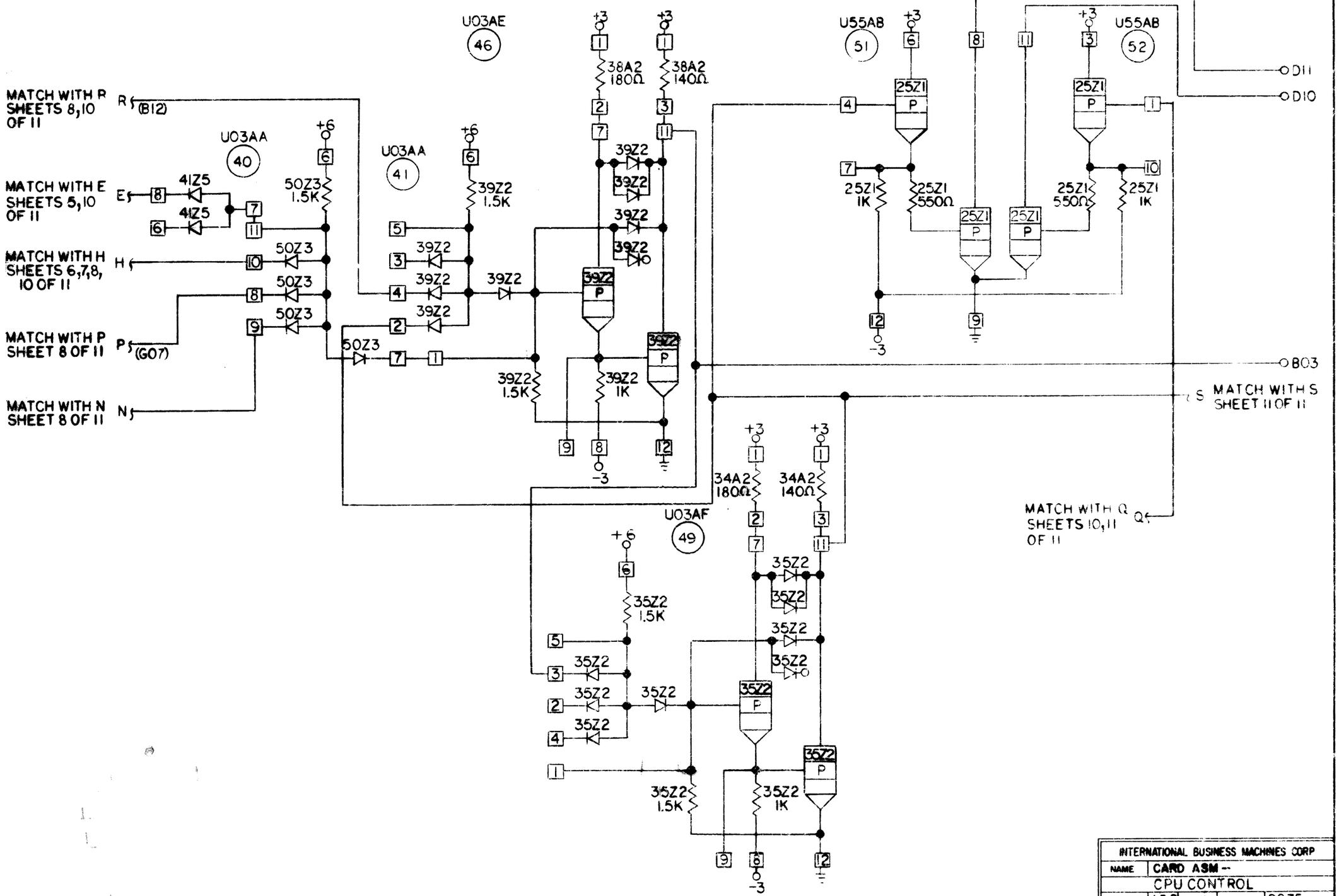

INTERNATIONAL BUSINESS MACHINES CORP				
NAME	CARD ASM -- CPU CONTROL			
DESIGN	ADC 6-12-68	TYPE	2075	
DETAIL	ADC 6-12-68	SCALE	NONE	
CHECK	ADC 6-19-68	DRAW		
APPRO	PHS 6-12-68	CHECK		

5801066 C