STANDARDS CODE	2-6232		SHEET 2 OF 3	5801067
CIRCUIT APPROVAL	PHS	06-28-68	STATUS	ACTIVE
LOCATION	POUGHKEEPSIE			RESTRICTED
RAW CARD NUMBER	5832294		HOLE PATTERN	5832294
FRONT ARTWORK	DATE	CHANGE NO.	DATE	CHANGE NO
5832294	07-17-68	175353 A		
BACK ARTWORK				
5832294				

PIN	VOLT.
B03	+12
G03	+12
B08	GND
G08	GND

CODE	PART NO	VALUE	QTY
R 1	216482	39.000K .25 + 5	1
R 2	216466	8.200K .25 + 5	1
R 3	549978	33.000 .25 + 5	1
R 4	216454	2.400K .25 + 5	1
R 5	216488	75.000K .25 + 5	1
R 6	216475	20.000K .25 + 5	2
R 7	593357	3.000K .25 + 5	2
R 8	216462	5.600K .25 + 5	2
R 9	216486	56.000K .25 + 5	1
C 1	492558	1. U	1
CR 1	2414891	GY	1
Z 1	361419	SLT MODULE	1
Z 2	361418	SLT MODULE	1
Z 3	361416	SLT MODULE	1
Z 4	361497	SLT MODULE	1
A 1	2414883	RC MODULE	1
AR	355343		1
AR	195000		1
AR	5362325		1
AR	811425		00
U 1	814247	PROGRAM CAP	2
U 2	815371	PROGRAM CAP	19

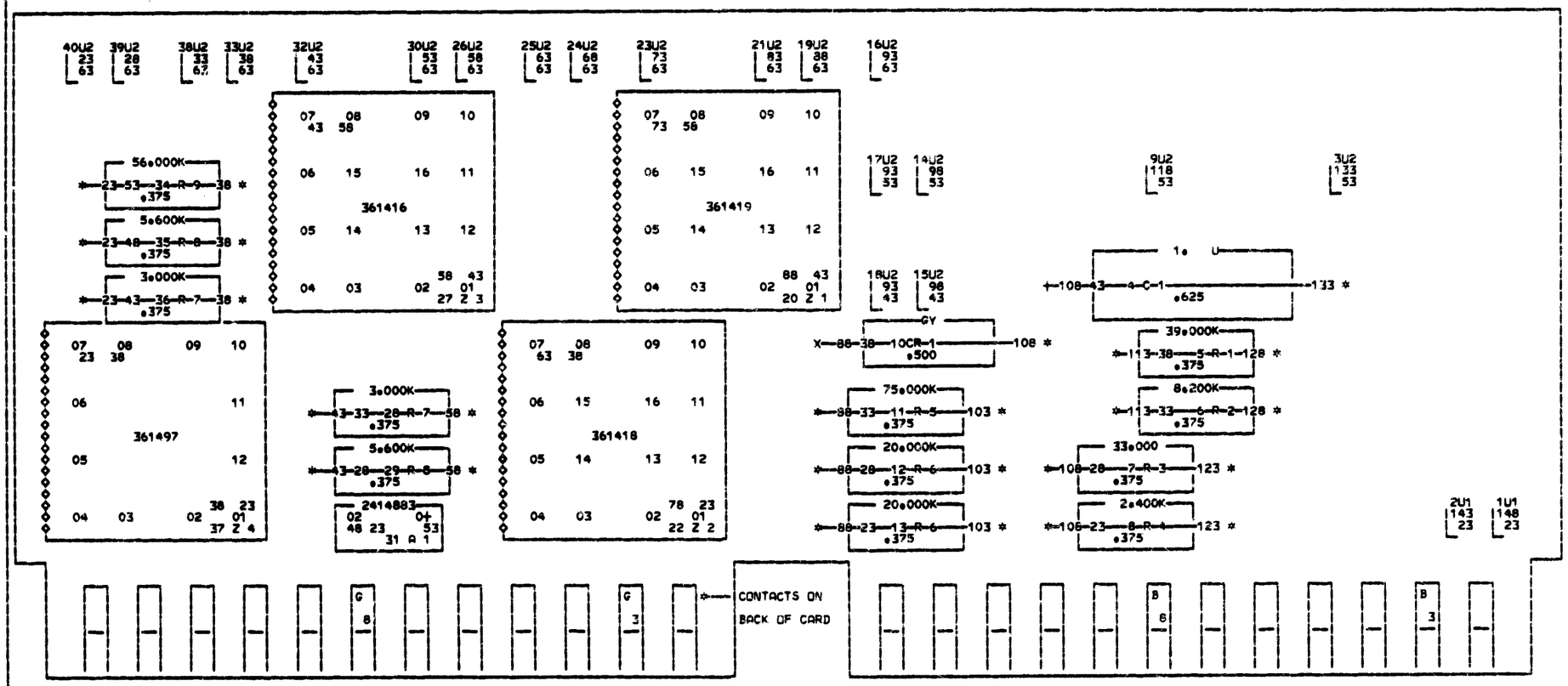

NOTES.

AA-ALL CIRCUITS MUST CONFORM TO ENG.SPEC. SHOWN ON SHEET 1.

AB-ASSEMBLE TO ENGINEERING SPECIFICATION 890913

AR-ASSEMBLE SWITCH 355343 QTY 1.0 LAMP SOCKET 195000 QTY 1.0 AND LAMP ASSEMBLY 5362325 QTY 1. USING WIRE 811425 AND IBM SPEC. 1209 AS PER REF DRAWING 816025.
DO NOT SUBJECT TO ANY LIQUIDS

AB-871185

AK-CARD HAS BEEN DECOUPLED 811800 IS NOT APPLICABLE.

INTERNATIONAL BUSINESS MACHINES CORP.

NAME	C.E.LATCH CARD				
DESIGN	02-13-68	RFZ	TYPE	5800	
DETAIL	02-13-68	RFZ	SCALE	NONE	
CHECK	02-19-68	RCE	DRAW	7090	06-28-68
APPRO	02-13-68	PHS	L.C.N.	5801067	