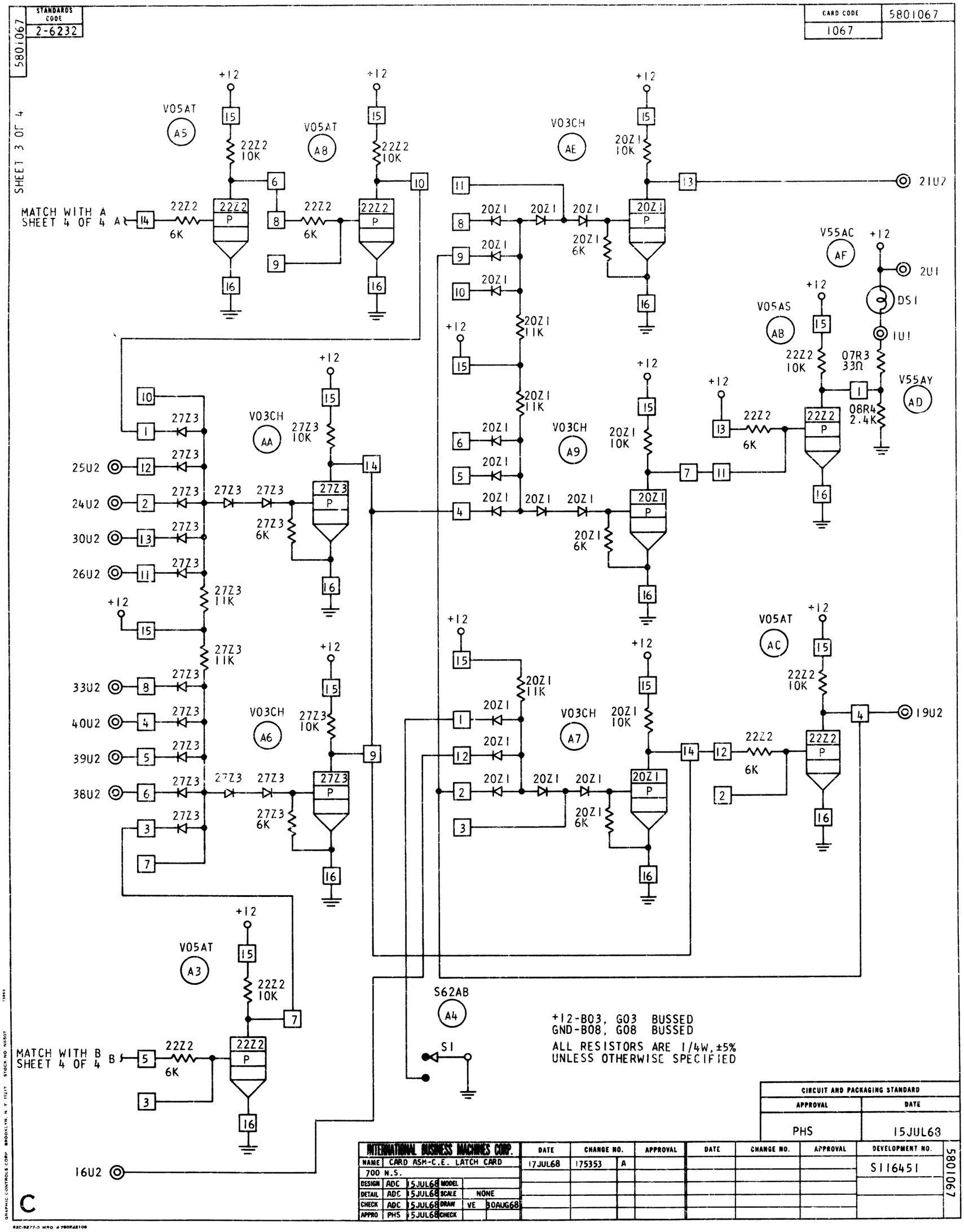
STANDARDS CODE 2-6232
5801067
CARD CODE 1067
5801067
SHEET 3 OF 4
MATCH WITH A SHEET 4 OF 4 A
MATCH WITH B SHEET 4 OF 4 B
25U2
24U2
30U2
26U2
33U2
40U2
39U2
38U2
16U2
21U2
2U1
1U1
19U2
S1
S62AB
A4
V05AT
V03CH
V55AC
V05AS
V55AY
DS1
+12-B03, G03 BUSSED
GND-B08, G08 BUSSED
ALL RESISTORS ARE 1/4W, ±5%
UNLESS OTHERWISE SPECIFIED
CIRCUIT AND PACKAGING STANDARD
APPROVAL
DATE
PHS
15JUL68
INTERNATIONAL BUSINESS MACHINES CORP.
NAME CARD ASM-C.E. LATCH CARD
700 N.S.
DESIGN ADC 15JUL68
DETAIL ADC 15JUL68
CHECK ADC 15JUL68
APPRO PHS 15JUL68
MODEL
SCALE NONE
DRAW VE 30AUG68
CHECK
DATE
CHANGE NO.
APPROVAL
17JUL68
175353
A
DEVELOPMENT NO.
S116451
5801067
C